STRUCTURE	TYPE	SPAN AND SKEW	OVER	STATION
Hamilton Co. Bridge No. 282	Prestressed Concrete Box Beam	1 Span @ 39'-6" 27° Skew Lt.	McKinzie Ditch	13+84 "A" ℄ Structure

HAMILTON COUNTY, INDIANA

REPLACEMENT OF SMALL STRUCTURE NO. 31051 (BRIDGE NO. 282) JERKWATER ROAD OVER McKINZIE DITCH HCHD PROJECT NO. PB-09-0015

TRAFFIC DATA	
A.D.T. (2011)	860 V.P.D.
A.D.T. (2031 PROJECTED)	1815 V.P.D.
DESIGN SPEED	55 M.P.H.
POSTED SPEED	45 M.P.H.
ACCESS CONTROL	NONE
LOCAL FUNCTIONAL CLASSIFICATION	RURAL SECONDARY (MINOR) ARTERIAL
REGULATED DRAIN	YES-OPEN DITCH

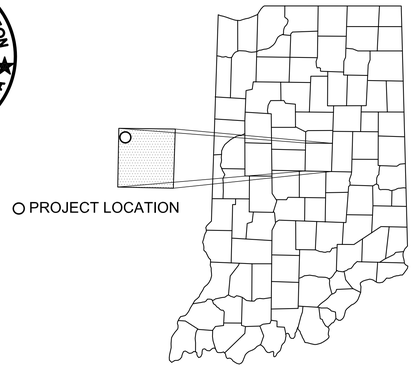

SMALL STRUCTURE NO. 31051 (BRIDGE NO. 282)
JERKWATER ROAD OVER McKINZIE DITCH
Latitude: 40°10'22" N
Longitude: 86°13'24" W

INDEX

SHEET NO.	SUBJECT
1	TITLE AND INDEX
2	LOCATION CONTROL ROUTE SURVEY
3	TYPICAL CROSS SECTION AND MISCELLANEOUS DETAILS
4	SOIL BORINGS
5	LAYOUT SHEET
6	GENERAL PLAN
7-8	END BENT DETAILS
9	BEAM DETAILS
10-11	SUPERSTRUCTURE DETAILS
12	SCREED DETAILS
13-14	APPROACH SLAB DETAILS
15	BRIDGE SUMMARY
16-22	CROSS SECTIONS-LINE "A"
23-24	CROSS SECTIONS-LINE "BR"

REPLACEMENT OF HAMILTON COUNTY SMALL STRUCTURE NO. 31051 (BRIDGE NO. 282)
JERKWATER ROAD OVER McKINZIE DITCH 0.5 MILE NORTH OF 261ST STREET IN SECTIONS 19 & 20, T 20 N., R 3 E,
ADAMS TOWNSHIP, HAMILTON COUNTY, INDIANA

END PROJECT
STA. 16+00 "A"

PROJECT LOCATION
HAMILTON COUNTY SMALL STRUCTURE 31051
(BRIDGE NO. 282)
JERKWATER ROAD OVER McKINZIE DITCH
ONE SPAN @ 39'-6", 27° SKEW LT.
℄ STRUCTURE STA. 13+84.00 "A"

BEGIN PROJECT
STA. 11+75 "A"

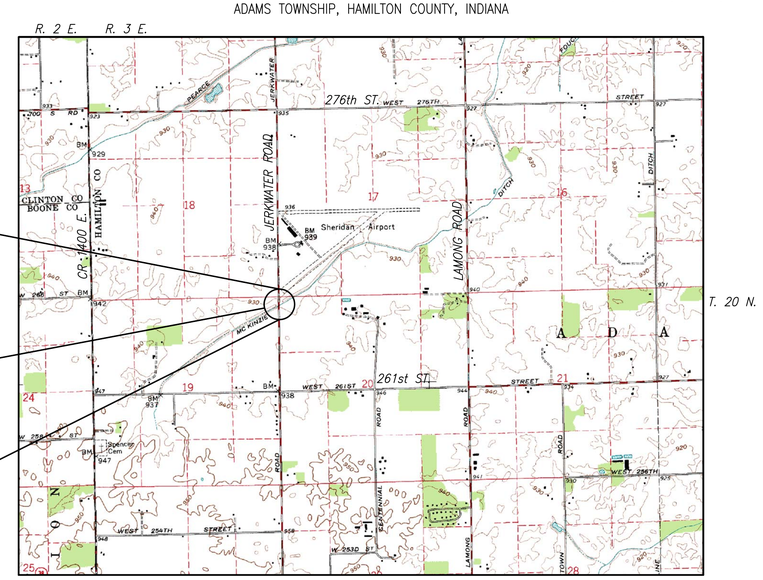

LOCATION MAP

0' 2000' 4000'
SCALE: 1"= 2000'

APPROVED BY
HAMILTON COUNTY BOARD OF COMMISSIONERS

STEVEN C. DILLINGER, PRESIDENT

CHRISTINE ALTMAN, VICE-PRESIDENT

STEVEN A. HOLT, MEMBER

ATTEST DATE 10/11/10

DAWN COVERDALE, COUNTY AUDITOR

RECOMMENDED FOR APPROVAL DATE 10/11/10

JIM NEAL, PE, COUNTY HIGHWAY ENGINEER

Plans Prepared By:
USI CONSULTANTS
8415 E. 56th Street
Indianapolis, Indiana 46216
Phone: (317) 544-4996
Fax: (317) 544-4997

PAUL R. AIKINS

DATE November 4, 2010

PAUL R. AIKINS REGISTERED No. PE10809497 STATE OF INDIANA PROFESSIONAL ENGINEER

[INDIANA DEPARTMENT OF TRANSPORTATION
STANDARD SPECIFICATIONS DATED 2010
TO BE USED WITH THESE PLANS]

NORTH

Basis of Bearing:
Indiana State Plane
Ind. East (1301), NAD 83 (1997)
US Survey Feet

50 0 25 50 100 200

GRAPHIC SCALE
1 inch = 50 ft.

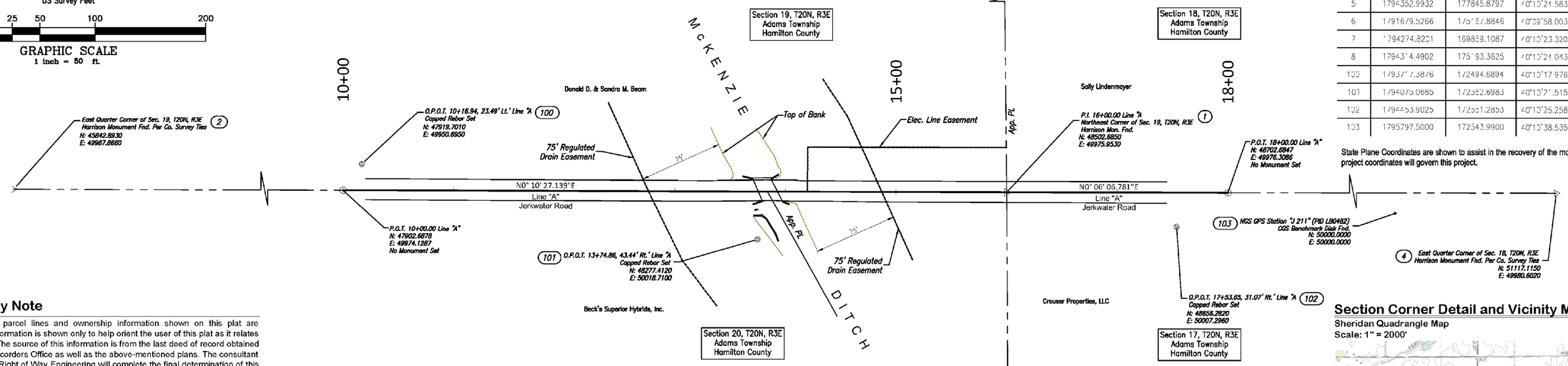

State Plane Coordinate Data Table

Point #	SPC, Ind. East NAD 83 (1997) Northing (US Feet)	SPC, Ind. East NAD 83 (1997) Easting (US Feet)	Latitude	Longitude
1	1797300.2526	172519.9441	40°10'23.7382"	-86°13'24.0726"
2	1791640.5807	172511.8575	40°09'57.4550"	-86°13'23.9620"
3	1791631.4321	169870.6477	40°09'57.1997"	-86°13'57.9819"
4	1790914.5046	172524.5929	40°10'49.5728"	-86°13'24.2238"
5	1794352.9932	177845.8797	40°10'24.5836"	-86°12'15.4673"
6	1791679.5266	175187.8846	40°09'58.0030"	-86°12'49.7535"
7	1794274.8201	169859.1087	40°10'23.3206"	-86°13'58.3476"
8	1794314.4902	175193.3625	40°10'24.0430"	-86°12'49.6344"
100	1793777.3876	172494.6894	40°10'17.9768"	-86°13'24.3508"
101	1794075.0665	172552.6983	40°10'21.5156"	-86°13'23.5036"
102	1794453.9025	172551.2853	40°10'25.2585"	-86°13'23.6812"
103	1795797.5000	172543.9900	40°10'38.5353"	-86°13'23.8837"

State Plane Coordinates are shown to assist in the recovery of the monuments shown here on. The project coordinates will govern this project.

Right of Way Note

The right of way, parcel lines and ownership information shown on this plat are preliminary. This information is shown only to help orient the user of this plat as it relates to the centerlines. The source of this information is from the last deed of record obtained from the County Recorders Office as well as the above-mentioned plans. The consultant responsible for the Right of Way Engineering will complete the final determination of this information.

Section Corner and Horizontal Control References

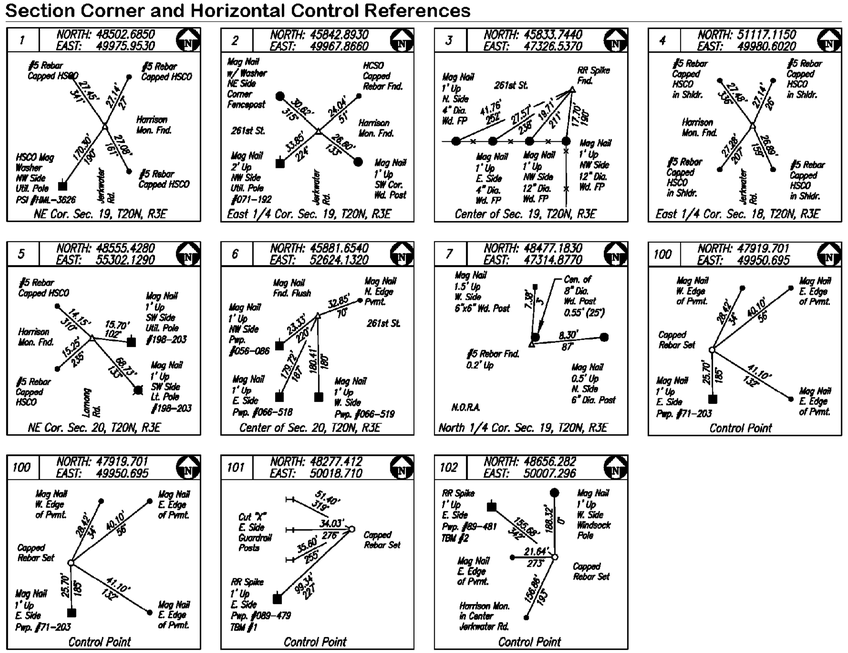

Surveyor's Report

Located in Sections 17, 18, 19 and 20 of Township 20 North, Range 3 East in Adams Township, approximately 2.5 miles north of Sheridan, Indiana, in Hamilton County.

The purpose of this survey is to collect data for the preparation of construction and right of way plans. This is not a property retracement survey. Any apparent property, subdivision, or easement lines or corners are based on the last deeds of record obtained from the County Recorder's Office. These lines in no way represent property, subdivision, or easement lines that could be determined from a retracement property survey. They are preliminary and should not be used to represent a retracement property survey. No monuments were set to represent the same. In addition, any monuments depicted on this plat indicated as being found or set should be used only for the above stated purpose.

Field measurements for this survey were in accordance with the specifications outlined in IAC 865 1-14. Measurements are shown to the nearest 0.01 feet, coordinates to the nearest 0.0001 feet, and the bearings to the 0.001 seconds, not to indicate the precision of the work, but to allow for closure and adjustment by others if desired. Units are US Survey Feet unless otherwise noted.

Horizontal Control

The horizontal control for this project is based on the Indiana State Plane Coordinate (SPC) System, East Zone (1301), North American Datum of 1983, Adjustment Year 1997, US Survey Feet. Said system was ascertained by Real Time Kinematic (RTK) GPS observation from the Midwest RTK Networks Continually Operating Reference Station "HAMC" and observation to the National Geodetic Survey (NGS) station "J 211" (PID LB0482)(USI #103). These SPC values were grounded and translated to a local coordinate system. This grounded system will govern the project for design, right of way computations and layout. The relationship between the SPC and the project coordinates are as follows:

Coordinate System:	US State Plane 1983(at ground)
Zone:	Indiana East 1301
Datum:	NAD 1983 (Conus)
Ellipsoid Name:	Geodetic Ref System 1980
Geoid Model:	GEOID03 (Conus)

Local site settings

Project latitude:	40°10'38.53531"N
Project longitude :	86°13'23.88370"W
Project height:	825.297sft
Ground scale factor:	1.0000451420
False northing offset:	1745797.500sft
False easting offset:	122543.990sft

Please see the State Plane Coordinate Data Table for more information of the relationship between the two coordinate systems.

The Midwest RTK VRS Systems continuously operating reference stations (CORS) "HAMC" was used to measure dual RTK vectors on all control points and section corners. These dual vectors were compared and adjusted using a least squares analysis software.

Reference Monumentation:

Control Points - See references and coordinate list - Estimated relative positional accuracy of these points due to random errors in the measurement or staking of these monuments is +/- 0.10 feet.

Section Corners - See Section Corner Detail and References - Estimated relative positional accuracy of these points due to random errors in the measurement of these monuments is +/- 0.10 feet.

1 - Northeast Corner of Sec. 19, T20N, R3E - Harrison Monument found per County Surveyors ties. The uncertainty in this monument as it relates to the corner of record is considered negligible due to prima facie evidence.

2 - East Quarter Corner of Sec. 19, T20N, R3E - Harrison Monument found per County Surveyors ties. The uncertainty in this monument as it relates to the corner of record is considered negligible due to prima facie evidence.

3 - Center of Sec. 19, T20N, R3E - RR Spike found, origin unknown. The location of this monument is consistent with a farm fence running south. Historical aerial photos were reviewed for this location and it appears that this line of occupation has been evident as far backs as 1940. Due to this monuments consistency with the aforementioned long standing occupation, this monument was accepted as the best available evidence of the record corner.

4 - East Quarter Corner of Sec. 18, T20N, R3E - Harrison Monument found per County Surveyors ties. The uncertainty in this monument as it relates to the corner of record is considered negligible due to prima facie evidence.

5 - Northeast Corner of Sec. 20, T20N, R3E - Harrison Monument found per County Surveyors ties. The uncertainty in this monument as it relates to the corner of record is considered negligible due to prima facie evidence.

6 - Center of Sec. 20, T20N, R3E - Mag Nail found per a boundary survey by Miller Surveying, Inc. (Job Number B27050) Dated April 12th, 2001. Said Mag Nail was reported to be set by references to and 5/8" Iron Rod. Said report does not state if the references were per county ties. There are no references available for this corner on the Hamilton County Surveyors web site. Said monuments was accepted for this survey due to common report and is considered to be the best available evidence of the record corner.

7 - North Quarter Corner of Sec. 19, T20N, R3E - 5/8" Rebar found on the south side of an 8" wood corner post with farm fence running north and east, origin unknown. Historical aerial photos were reviewed for this location and it appears that this line of occupation has been evident as far backs as 1936. Due to this monuments consistency with the aforementioned long standing occupation, this monument was accepted as the best available evidence of the record corner.

8 - North Quarter Corner of Sec. 20, T20N, R3E - No Monument found or set. Said corner location was established per the aforementioned Miller survey (see #6). A 5/8" Capped rebar was reported to have been reset in 2001 per Miller Surveying field notes in FB 2, Pg. 100-104 dated November 1971. A search was made in the area per calculations based on the Miller survey but nothing was found. The corner location was established per said Miller survey by calculations from common corners. The location as established is consistent with historical aerials dating back to 1962. This corner location was accepted for the purpose of right of way acquisition calculations due to the historical evidence presented hereon.

Alignments and Right of Way

Line "A" - Said line was established on the section line between Sections 19 and 20, being 600 feet south of the Northeast Corner of Section 19 (#1) and on the section line between Sections 17 and 18, being 200 feet north of the Northeast Corner of Section 19 (#1).

No right of way of record was found during the research for Jerkwater Road. The edge of pavement is show as a possible easement by prescription.

Section Corner Detail and Vicinity Map

Sheridan Quadrangle Map
Scale: 1" = 2000'

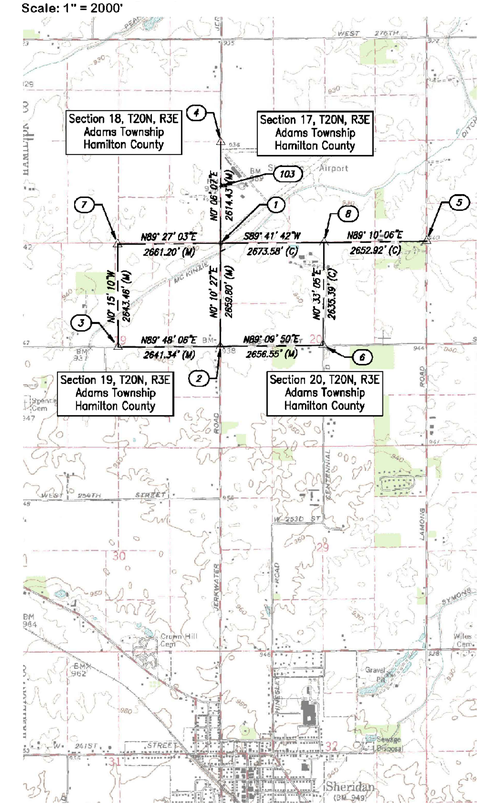

USI #2009-127

SURVEY STARTED		
2/12/2010		
SURVEY COMPLETED		
3/17/2010		
ROUTE PLAT SHEETS		
1	OF	1

Recorded on the 6th day of April, 2010 in the Office of the Hamilton County Recorder as Instrument #2010014839.

SURVEYOR STATEMENT

This survey, to the best of my knowledge and belief, is executed according to the provisions of title 865 i.A.C. 1-12-20 through 1-12-26 regarding route surveys, except that any data shown regarding the location or description of the existing parcels is not a part of this survey.

RYAN C. SWINGLEY REGISTERED No. LS 20500024 STATE OF INDIANA LAND SURVEYOR

AFFIRMATION STATEMENT

I affirm, under the penalties for perjury, that I have taken reasonable care to redact each Social Security number in this document, unless required by law. By: Ryan C. Swingley

RECOMMENDED FOR APPROVAL AND PREPARED BY:

SIGNATURE 3/17/2010
RYAN C. SWINGLEY PLS DATE

USI consultants
engineers & land surveyors
8415 East 56th St.
Indianapolis, IN 46216
PH. 317.544.4996
FAX 317.544.4997

Hamilton County Small Structure No. 31051

LOCATION CONTROL ROUTE SURVEY

HORIZONTAL SCALE	BRIDGE FILE
1" = 50'	
COUNTY	DESIGNATION
HAMILTON	
SURVEY BOOK	PLAN SHEETS
	2 OF 24
CONTRACT	PROJECT

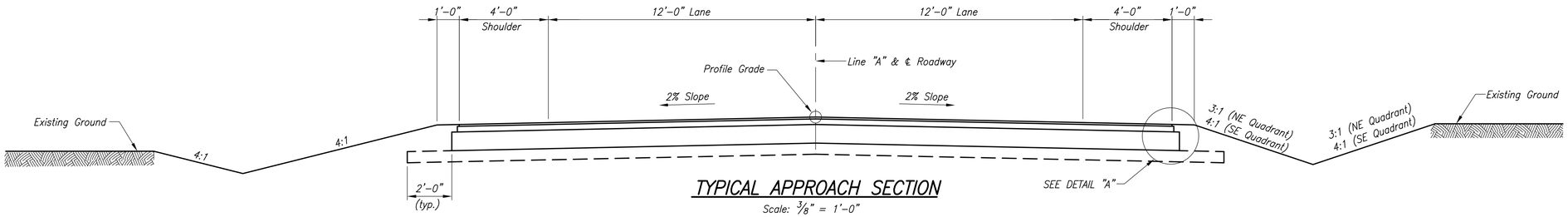

TYPICAL APPROACH SECTION

Scale: 3/8" = 1'-0"

NOTE: Full Depth Pavement Replacement to be Constructed from Beginning to End of Incidental Construction Limits.

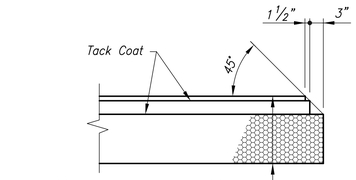

165#/SYD HMA Surface, Type "A" over
330#/SYD HMA Intermediate, Type "A" over
1100#/SYD HMA Base, Type "A" OVER
Subgrade Treatment, Type III
Proof Roll is required

DETAIL "A"

Scale: 3/4" = 1'-0"

(NOTE: Tack Coat to be Included in the Cost of HMA Items for this Contract)

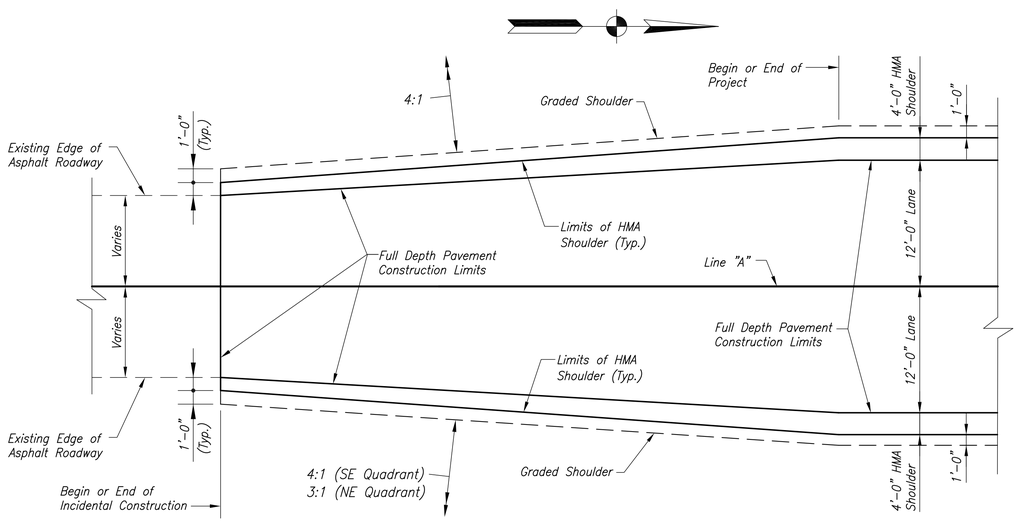

INCIDENTAL CONSTRUCTION DETAIL

No Scale

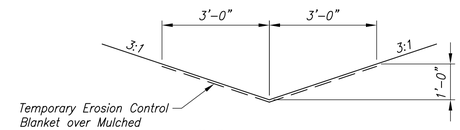

"V" DITCH DETAIL 3:1 SLOPES

Scale: 1/2" = 1'-0"

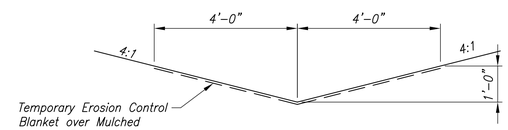

"V" DITCH DETAIL 4:1 SLOPES

Scale: 1/2" = 1'-0"

TEMPORARY EROSION AND SEDIMENT CONTROL TABLE				
LOCATION		Temporary Check Dam Revetment Riprap	Silt Basin	Temporary Silt Fence
STATION TO STATION	LT./RT.			
12+65 "A"	LT.	4.4 Tons		
12+65 "A"	RT.	4.4 Tons		
14+79 "A"	LT.	4.4 Tons		
14+87 "A"	RT.	4.4 Tons		
14+06 "A"	RT.		1 LSUM	
TOTALS		17.6 Tons	1 LSUM	

SIGN LEGEND				
SYMBOL	MESSAGE	NUMBER	TYPE	REQ'D.
1	JERKWATER ROAD CLOSED XX MILES AHEAD LOCAL TRAFFIC ONLY	R11-3	A	2
	DETOUR(R or L)	XM4-10	B	2
2	ROAD CONSTRUCTION AHEAD	XW20-1	A	6
3	ROAD CLOSED 500 FT.	XW20-3	A	6
4	DETOUR ROUTE MARKER ASSEMBLY (LEFT)			3
5	DETOUR ROUTE MARKER ASSEMBLY (RIGHT)			3
6	STANDARD BARRICADE TYPE III-B			48 Lft.
7	STANDARD BARRICADE TYPE III-A			48 Lft.
8	DETOUR AHEAD	XW20-2	A	2
9	ROAD CLOSED	R11-2	A	2

2-XG20-5 Signs to be placed at site a minimum of 10 business days prior to Road Closure.

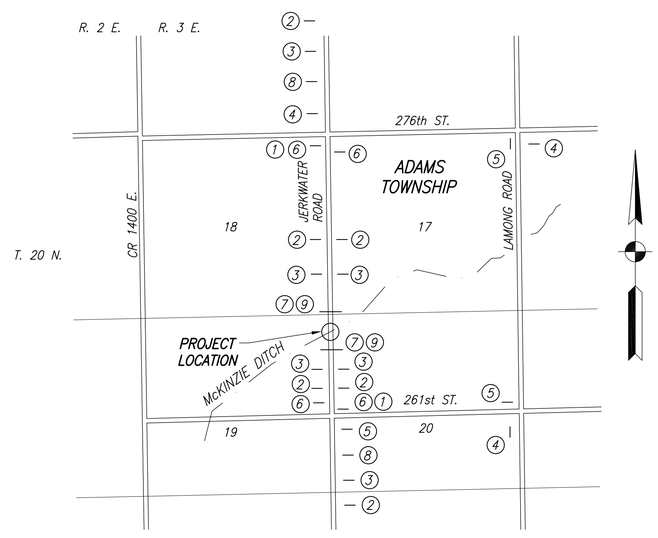

TRAFFIC CONTROL PLAN

No Scale

PAVEMENT MARKINGS				
DESCRIPTION	COLOR	LOCATION	LENGTH (Lft.)	PAY LENGTH (Lft.)
Line, Paint, Broken, 4"	Yellow	11+00 to 16+75 Lt. & Rt. of Centerline	575	120
		Total		120

TYPICAL SECTION AND MISCELLANEOUS DETAILS

BRIDGE NO. 282
JERKWATER ROAD OVER McKINZIE DITCH
HAMILTON COUNTY, INDIANA

Sheet: 3 of 24	Project No: PB-09-0015	USI CONSULTANTS 8415 East 56th Street Indianapolis, Indiana 46216	PAUL R. AIKINS REGISTERED No PE10809497 STATE OF INDIANA PROFESSIONAL ENGINEER
Drawing File: 09127DETAILS	Scale: AS NOTED		

LOG OF TEST BORING

EARTH EXPLORATION

Project: Jerkwater Road over McKinzie Ditch
Location: Hamilton County, Indiana
Client: USI Consultants, Inc.
7770 West New York Street - Indianapolis, Indiana 46214
317-273-1690 / 317-273-2250 (Fax)

Boring No. TB-1
Elevation 932.0
Datum USC & GS
EEI Proj. No. 1-10-084
Sheet 1 of 2

Proj. No. ---
Struct. No. Hamilton 282
Station 13+56
Offset 8 ft Lt.
Weather Sunny
Temp. 85° F
Driller C.H.
Inspector ---

SAMPLE No.	Type	Rec %	N Value	Depth ft	Elev	DESCRIPTION/CLASSIFICATION and REMARKS	q_p tsf	q_u tsf	γ_d pcf	W %	LL %	PL %	PI %
						ASPHALTIC CONCRETE, 6 in. / PORTLAND CEMENT CONCRETE, 6 in.							
SS-1		65	4		930	CLAY LOAM, stiff, moist, brown and gray, with occasional sandy loam seams, with silty clay loam seam near 4½'	1.75			18.2			
SS-2		70	4	5			1.75			28.3			
SS-3		100	4		925	SILTY LOAM, very stiff to very soft, moist, brown and gray to gray below 10', with occasional silt and sand partings and inclusions	2.25			19.9			
SS-4		100	4	10			0.5			25.6			
SS-5		55	8		920		0.25			22.6			
SS-6		100	4	15			0.25			22.6			
SS-7		100	4		915		<0.25			20.6			
SS-8		100	5	20			0.25			23.3			
					910								
SS-9		100	6	25		SILTY CLAY LOAM, medium stiff, moist, gray, with occasional silt partings	0.5			21.5	22	17	5
					905								
SS-10		100	6	30			0.5			24.9			

Continued Next Page

WATER LEVEL OBSERVATIONS

Depth ft	While Drilling	Upon Completion	After Drilling
To Water		15	7	BF
To Cave-in			27	

The stratification lines represent the approximate boundary between soil/rock types and the transition may be gradual.

GENERAL NOTES

Start 6/9/10 End 6/9/10 Rig CME 750X
Drilling Method 3¼" I.D. HSA
Remarks: Backfilled with auger cuttings, bentonite chips and asphaltic concrete patch at surface.

LOG OF TEST BORING

EARTH EXPLORATION

Project: Jerkwater Road over McKinzie Ditch
Location: Hamilton County, Indiana
Client: USI Consultants, Inc.
7770 West New York Street - Indianapolis, Indiana 46214
317-273-1690 / 317-273-2250 (Fax)

Boring No. TB-1
Elevation 932.0
Datum USC & GS
EEI Proj. No. 1-10-084
Sheet 2 of 2

Proj. No. ---
Struct. No. Hamilton 282
Station 13+56
Offset 8 ft Lt.
Weather Sunny
Temp. 85° F
Driller C.H.
Inspector ---

SAMPLE No.	Type	Rec %	N Value	Depth ft	Elev	DESCRIPTION/CLASSIFICATION and REMARKS	q_p tsf	q_u tsf	γ_d pcf	W %	LL %	PL %	PI %
					900	SILTY CLAY LOAM, medium stiff, moist, gray, with occasional silt partings							
SS-11		100	4	35		SAND, very loose, wet, gray							
					895								
SS-12		100	17	40		LOAM, very stiff, moist, gray	3.0	4.58	134.9	9.4			
					890								
SS-13		100	23	45			2.5	4.25	130.0	11.0			
					885								
SS-14		100	31	50			3.0			13.0			
					880								
SS-15		35	19	55		End of Boring at 55 ft	2.5			12.3			

The stratification lines represent the approximate boundary between soil/rock types and the transition may be gradual.

LOG OF TEST BORING

EARTH EXPLORATION

Project: Jerkwater Road over McKinzie Ditch
Location: Hamilton County, Indiana
Client: USI Consultants, Inc.
7770 West New York Street - Indianapolis, Indiana 46214
317-273-1690 / 317-273-2250 (Fax)

Boring No. TB-2
Elevation 932.0
Datum USC & GS
EEI Proj. No. 1-10-084
Sheet 1 of 2

Proj. No. ---
Struct. No. Hamilton 282
Station 14+10
Offset 7 ft Rt.
Weather Sunny
Temp. 85° F
Driller C.H.
Inspector ---

SAMPLE No.	Type	Rec %	N Value	Depth ft	Elev	DESCRIPTION/CLASSIFICATION and REMARKS	q_p tsf	q_u tsf	γ_d pcf	W %	LL %	PL %	PI %
						ASPHALTIC CONCRETE, 3 in. / PORTLAND CEMENT CONCRETE, 11 in.							
SS-1		40	4		930	SILTY CLAY LOAM, stiff to soft, moist, brown and gray, with occasional silty loam seams and inclusions, with sandy loam seam near 1'	1.25			25.8			
SS-2		70	4	5			0.5			35.5			
SS-3		100	3		925	SILTY LOAM, medium to soft, moist, brown and gray to gray below 9½', with occasional sandy loam partings	0.5			22.3			
SS-4		100	4	10			0.25			26.0			
SS-5		100	3		920	SILTY CLAY LOAM, soft to very soft, moist to very moist, gray and dark gray	0.25			25.6			
SS-6		100	0	15			<0.25			26.5			
SS-7		100	6		915	LOAM, stiff to very stiff, moist, gray	1.0			11.6			
SS-8		100	8	20			2.0			10.5			
					910								
SS-9		100	6	25			1.25	1.19	128.3	12.1			
					905								
SS-10		100	7	30			1.25			12.5			

Continued Next Page

WATER LEVEL OBSERVATIONS

Depth ft	While Drilling	Upon Completion	After Drilling
To Water		10	5½	BF
To Cave-in			26½	

The stratification lines represent the approximate boundary between soil/rock types and the transition may be gradual.

GENERAL NOTES

Start 6/9/10 End 6/9/10 Rig CME 750X
Drilling Method 3¼" I.D. HSA
Remarks: Backfilled with auger cuttings, bentonite chips and asphaltic concrete patch at surface.

LOG OF TEST BORING

EARTH EXPLORATION

Project: Jerkwater Road over McKinzie Ditch
Location: Hamilton County, Indiana
Client: USI Consultants, Inc.
7770 West New York Street - Indianapolis, Indiana 46214
317-273-1690 / 317-273-2250 (Fax)

Boring No. TB-2
Elevation 932.0
Datum USC & GS
EEI Proj. No. 1-10-084
Sheet 2 of 2

Proj. No. ---
Struct. No. Hamilton 282
Station 14+10
Offset 7 ft Rt.
Weather Sunny
Temp. 85° F
Driller C.H.
Inspector ---

SAMPLE No.	Type	Rec %	N Value	Depth ft	Elev	DESCRIPTION/CLASSIFICATION and REMARKS	q_p tsf	q_u tsf	γ_d pcf	W %	LL %	PL %	PI %
					900	LOAM, stiff to very stiff, moist, gray							
SS-11		65	7	35			2.75			11.1	16	12	4
					895	SAND, medium dense, wet, gray, with possible cobbles							
SS-12		20	11	40		LOAM, medium stiff, moist, gray, with occasional cobbles	0.5			13.1			
					890								
SS-13		45	39	45		SANDY GRAVEL, dense, wet, gray							
					885								
SS-14		100	24	50		SAND AND GRAVEL, medium dense to dense, wet, gray, with occasional cobbles							
					880								
SS-15		100	39	55									
					875	SAND, dense, wet, gray, with occasional cobbles							
SS-16		100	34	60									
						End of Boring at 60 ft							

The stratification lines represent the approximate boundary between soil/rock types and the transition may be gradual.

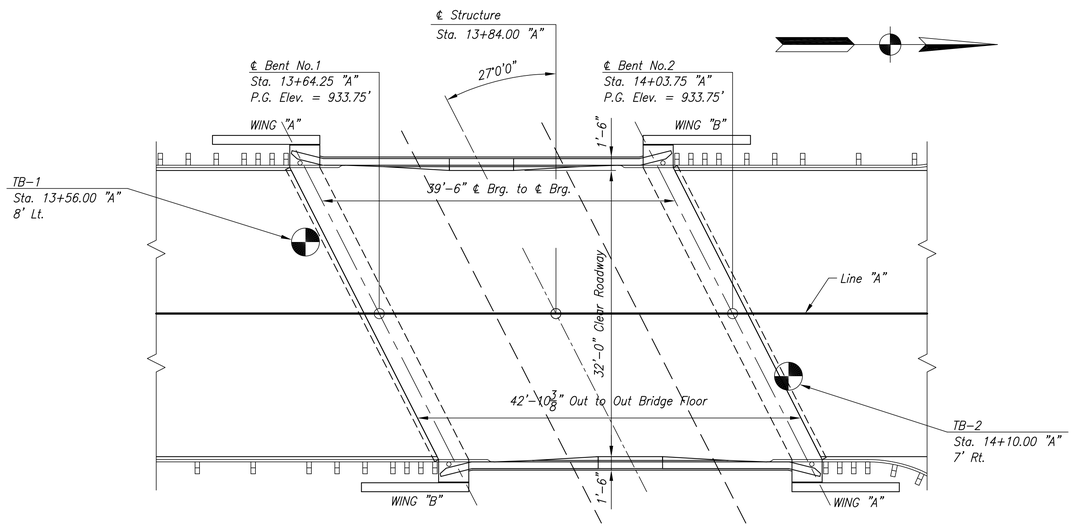

PLAN

Scale: 1/8"=1'-0"

SOIL BORINGS

BRIDGE NO. 282
JERKWATER ROAD OVER McKINZIE DITCH
HAMILTON COUNTY, INDIANA

Sheet:	Project No:	
4 of 24	PB-09-0015	USI CONSULTANTS, 8415 East 56th Street, Indianapolis, Indiana 46216
Drawing File: 09127 GPLAN1	Scale: AS NOTED	

PAUL R. AIKINS REGISTERED No. PE10809497 STATE OF INDIANA PROFESSIONAL ENGINEER

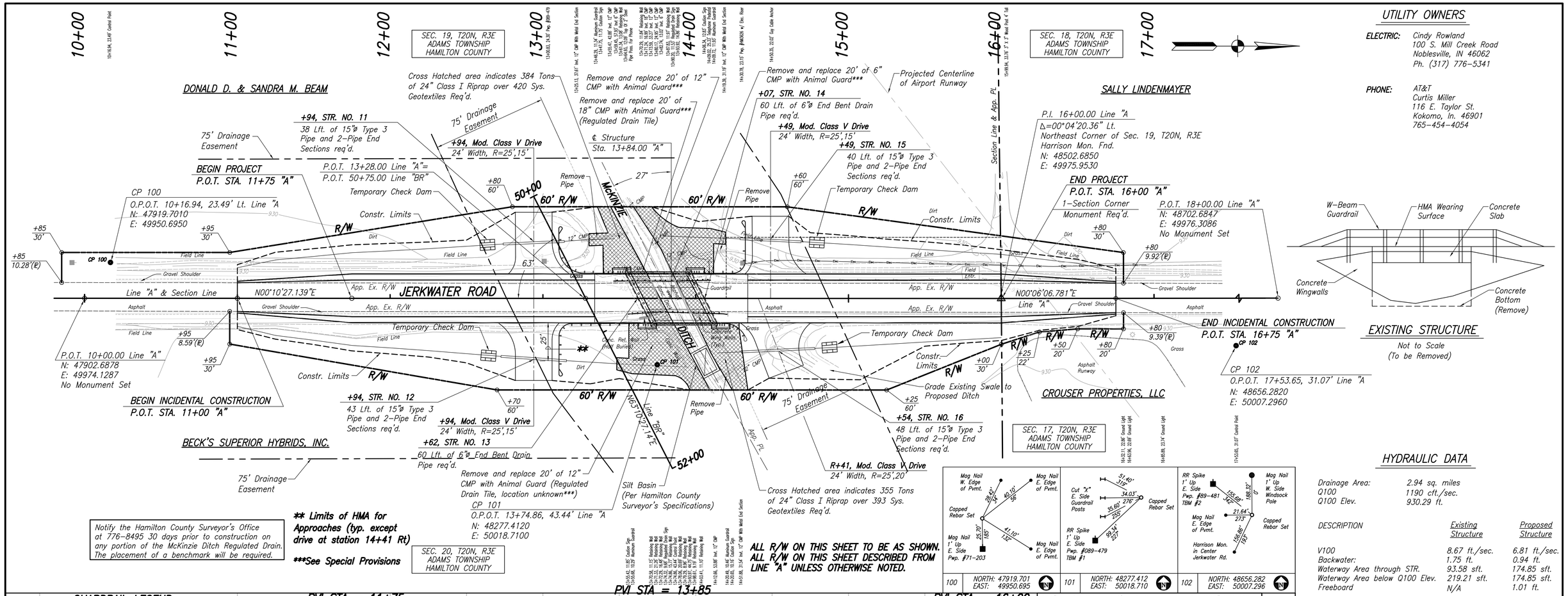

PROFILE ON PROPOSED ℄ ROADWAY

SCALES: HORIZ. 1"=30'-0" VERT. 1"=5'-0"

UTILITY OWNERS

ELECTRIC: Cindy Rowland
100 S. Mill Creek Road
Noblesville, IN 46062
Ph. (317) 776-5341

PHONE: AT&T
Curtis Miller
116 E. Taylor St.
Kokomo, In. 46901
765-454-4054

EXISTING STRUCTURE

Not to Scale
(To be Removed)

HYDRAULIC DATA

Drainage Area:	2.94 sq. miles
Q100	1190 cft./sec.
Q100 Elev.	930.29 ft.

DESCRIPTION	Existing Structure	Proposed Structure
V100	8.67 ft./sec.	6.81 ft./sec.
Backwater:	1.75 ft.	0.94 ft.
Waterway Area through STR.	93.58 sft.	174.85 sft.
Waterway Area below Q100 Elev.	219.21 sft.	174.85 sft.
Freeboard	N/A	1.01 ft.

EARTHWORK SUMMARY

Common Excavation	= 332 Cys
Fill + 20%	= 1332 Cys
Waterway Excavation	= 199 Cys
Usable Waterway Exc. (70%)	= 139 Cys
Foundation Exc.	= 154 Cys.
Borrow	= 707 Cys

"DON'T DIG BLIND"

1-800-382-5544
CALL BEFORE YOU DIG

CAUTION !!

THE LOCATIONS OF ALL EXISTING UNDERGROUND UTILITIES SHOWN ON THIS PLAN ARE BASED UPON ABOVE GROUND EVIDENCE (including, but not limited to, manholes, inlets, valves, and marks made upon the ground by others) AND ARE SPECULATIVE IN NATURE. THERE MAY ALSO BE OTHER EXISTING UNDERGROUND UTILITIES FOR WHICH THERE IS NO ABOVE GROUND EVIDENCE OR FOR WHICH NO ABOVE GROUND EVIDENCE WAS OBSERVED. THE EXACT LOCATIONS OF SAID EXISTING UNDERGROUND UTILITIES SHALL BE VERIFIED BY THE CONTRACTOR PRIOR TO ANY AND ALL CONSTRUCTION.

PRESTRESSED BOX BEAM BRIDGE
1 SPAN @ 39'-6", 27° SKEW LT.
32'-0" CLEAR ROADWAY

BRIDGE NO. 282
JERKWATER ROAD OVER McKINZIE DITCH
HAMILTON COUNTY, INDIANA

5 of 24	Project No: PB-09-0015	CONSULTANTS 8415 East 56th Street Indianapolis, Indiana 46216
09127 LAYOUT	Scale: 1" = 30'-0"	

PAUL R. AIKINS REGISTERED No. PE10809497 STATE OF INDIANA PROFESSIONAL ENGINEER

STRUCTURE BUILT TO A 250' VERTICAL CURVE

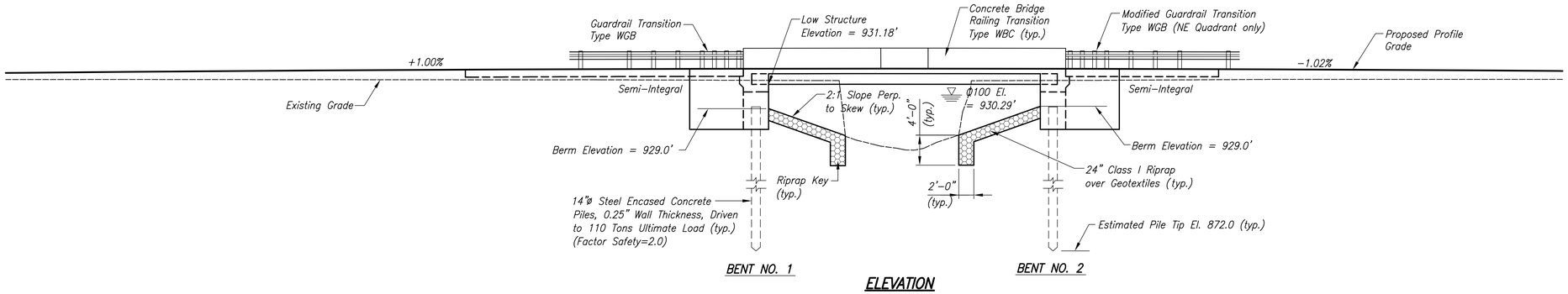

ELEVATION
Scale: 1/8" = 1'-0"

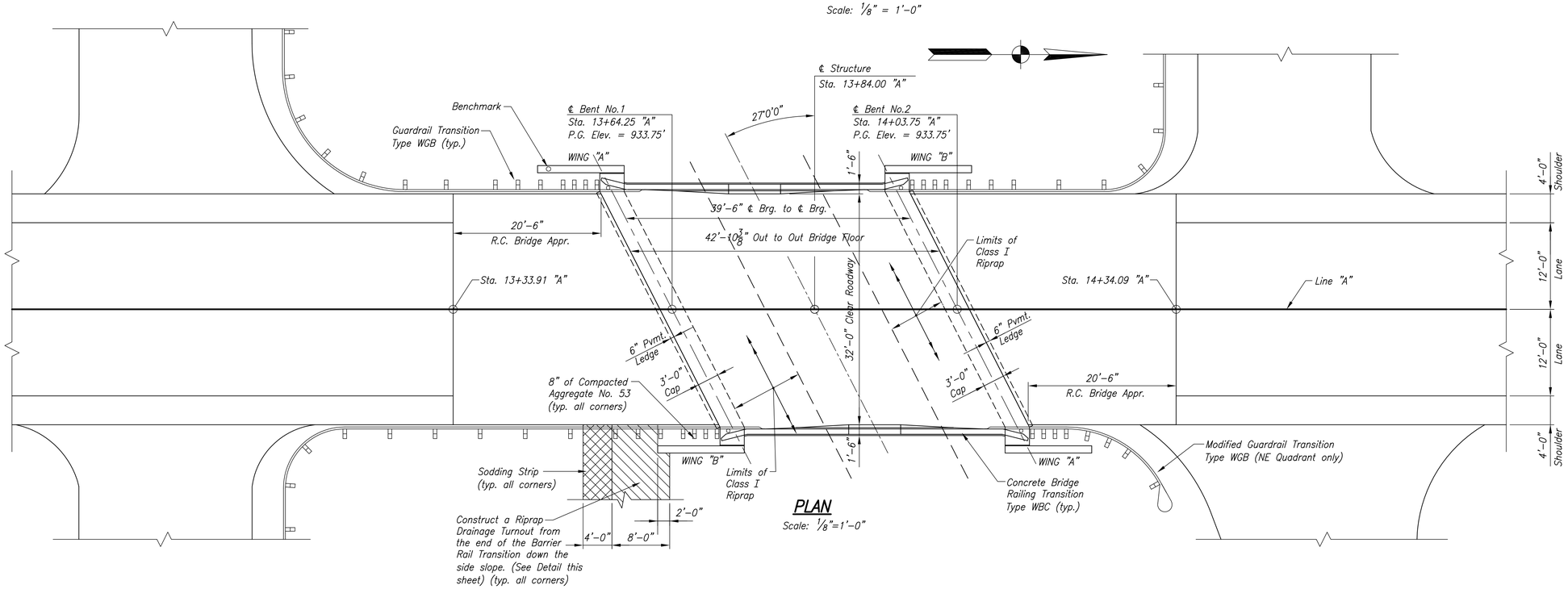

PLAN
Scale: 1/8"=1'-0"

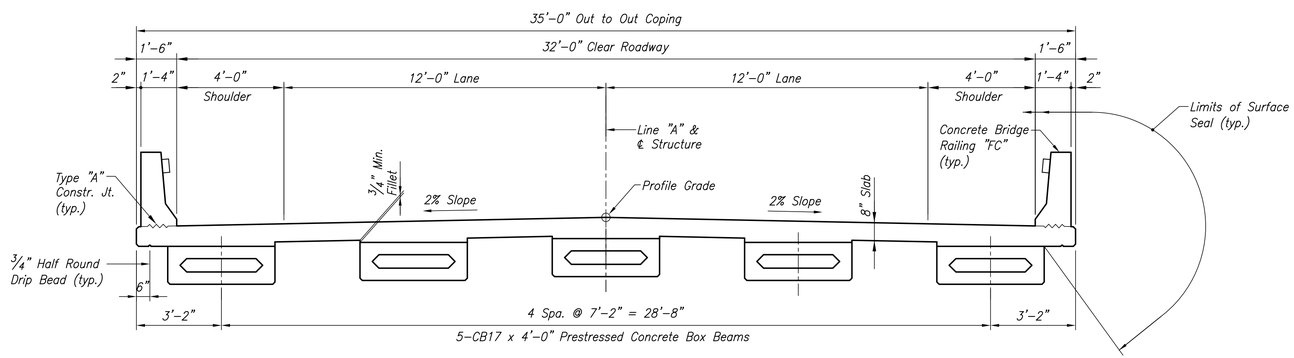

TYPICAL BRIDGE SECTION
Scale: 3/8"=1'-0"

GENERAL NOTES:

All dimensions are in feet and inches and all elevations are in feet unless otherwise noted.

Reinforcing steel covering to be 2 1/2" in top and 1" min. in bottom of floor slabs, 3" in footings except bottom steel to be 4", and 2" in all other parts, unless noted.

Concrete in superstructure & concrete barrier railing is to be Class "C".

Concrete shall be Class "A" unless noted above.

Surface Seal exposed surfaces of wingwalls, face of deck coping, underside of bridge floor from coping to face of outside beams, all faces of concrete barrier railing, bridge deck and approach slabs. Estimated Quantity = 4142 Sft.

Chamfer exposed corners of concrete 1" unless otherwise noted.

DESIGN DATA

Superstructure designed for HL-93 loading, in accordance with AASHTO LRFD Bridge Design Specifications, 4th Edition, 2007, and subsequent Interim Specifications.

Substructure designed for HS-25 loading, in accordance with AASHTO Standard Specifications for Highway Bridges, 17th Edition, 2002, and subsequent Interim Specifications.

Designed for actual dead load plus 35#/sft. future wearing surface, and 15#/sft. additional to permit use of Permanent Metal Deck Forms.

Slab designed with 1/2" wearing surface.

UNIT STRESSES:
Class "C" Concrete F'c = 4000 p.s.i.
Class "A" Concrete F'c = 3500 p.s.i.
Class "B" Concrete F'c = 3000 p.s.i.
Reinforcing Steel (Grade 60) Fy = 60,000 p.s.i.

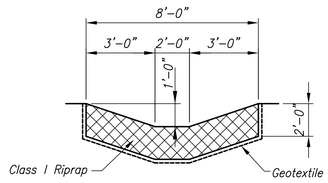

RIPRAP DRAINAGE TURNOUT DETAIL
Not to Scale

GENERAL PLAN

PRESTRESSED BOX BEAM BRIDGE
One Span @ 39'-6"
32'-0" Clear Roadway, 27° Skew Lt.

BRIDGE NO. 282
JERKWATER ROAD OVER McKINZIE DITCH
HAMILTON COUNTY, INDIANA

Sheet: 6 of 24	Project No: PB-09-0015	CONSULTANTS 8415 East 56th Street Indianapolis, Indiana 46216
Drawing File: 09127 GPLAN1	Scale: AS NOTED	

PAUL R. AIKINS REGISTERED No. PE10809497 STATE OF INDIANA PROFESSIONAL ENGINEER

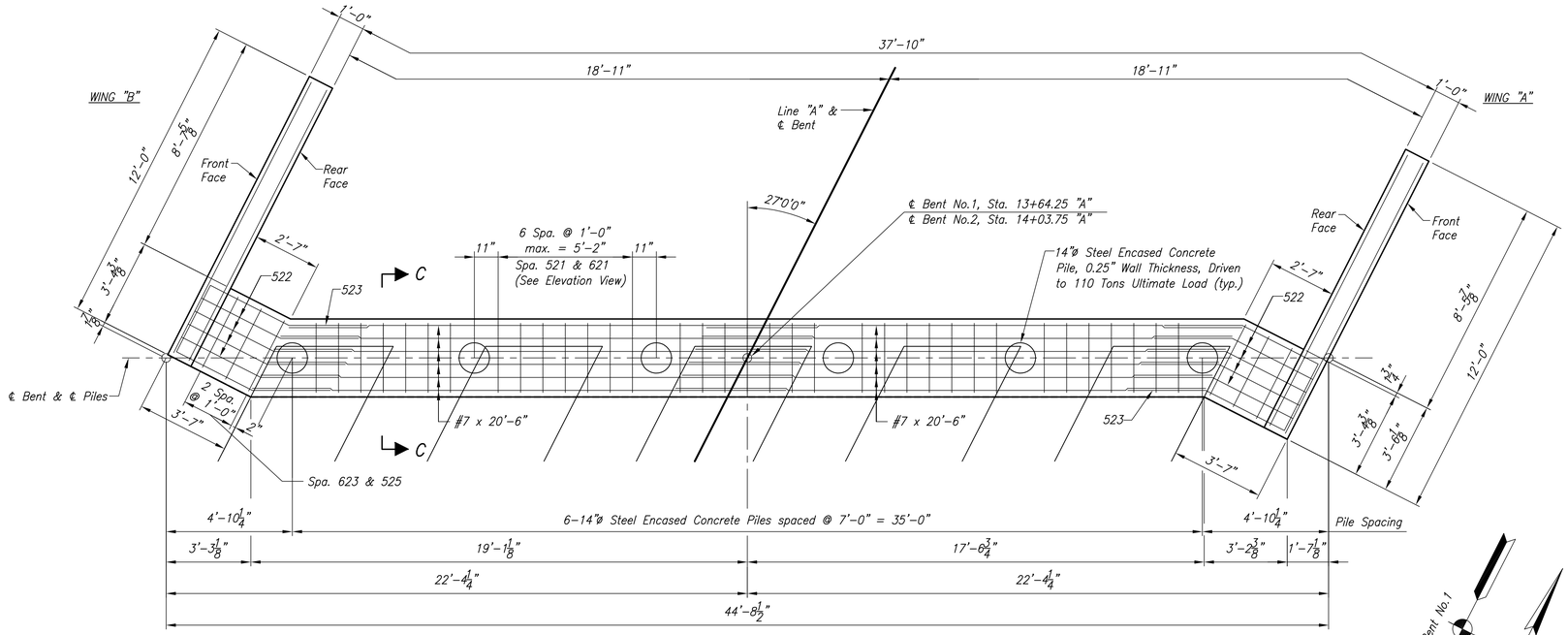

PILE PLAN

Scale: 3/8"=1'-0"

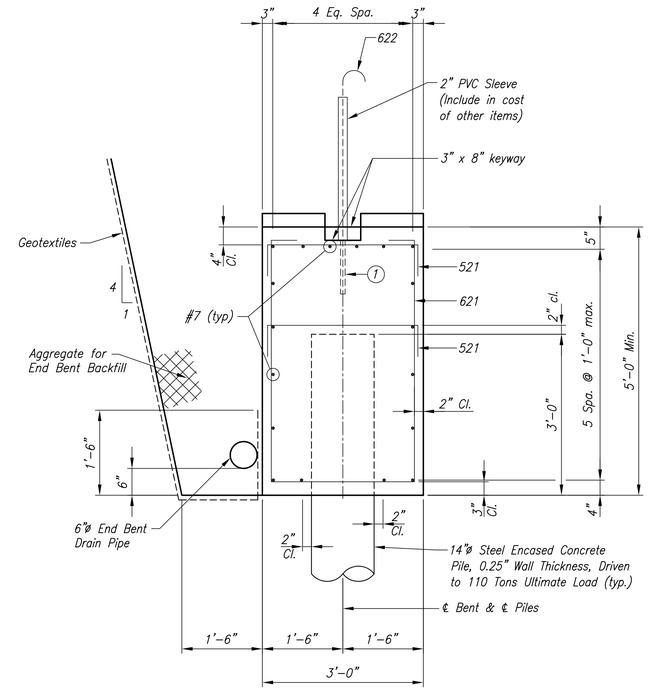

(1) 1'-0" depth Field Drilled Hole with epoxy grout, min. pullout 26,500 lbs.

SECTION "C-C"

Scale: 3/4" = 1'-0"

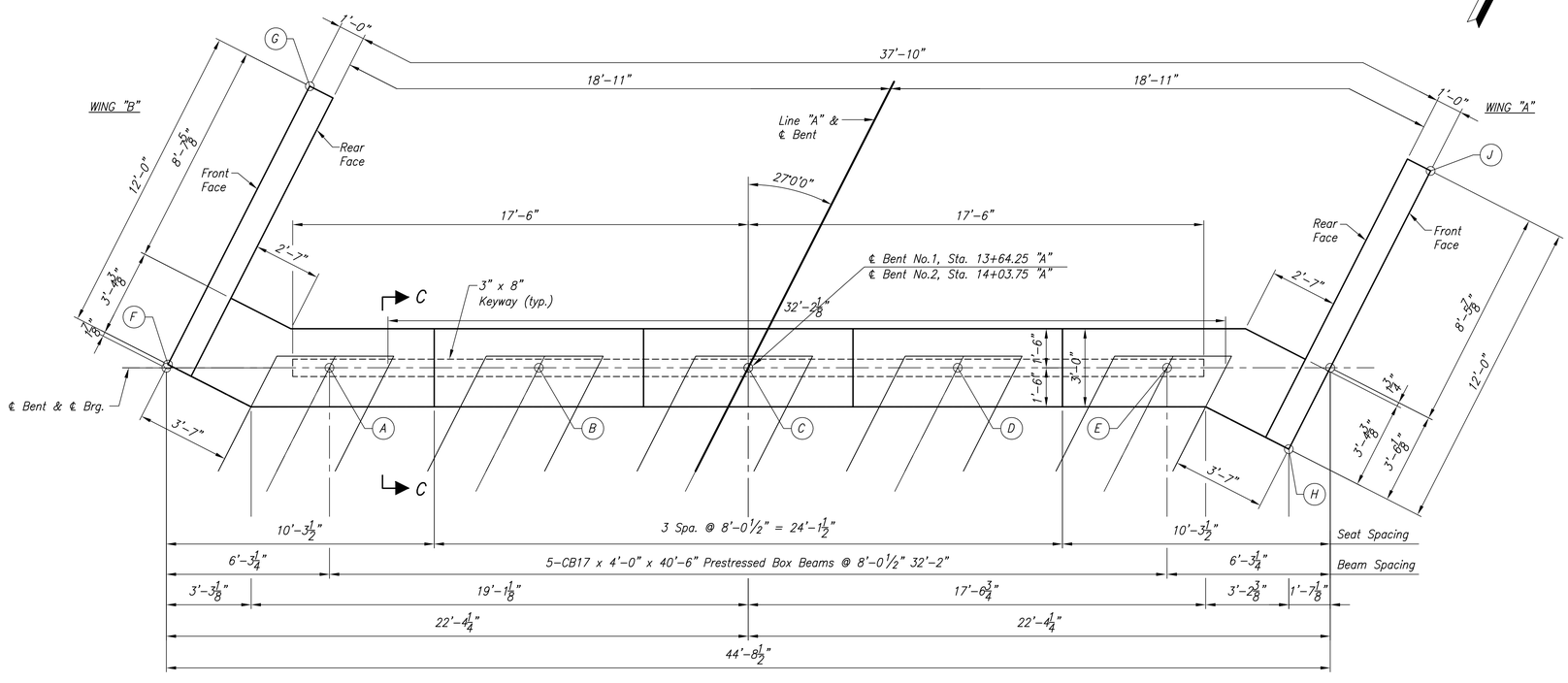

CAP PLAN

Scale: 3/8"=1'-0"

TABLE OF ELEVATIONS		
POINT	BENT NO. 1	BENT NO. 2
A	930.20'	930.20'
B	930.35'	930.35'
C	930.48'	930.48'
D	930.34'	930.33'
E	930.18'	930.18'
F	933.38'	933.38'
G	933.38'	933.38'
H	933.36'	933.36'
J	933.36'	933.36'
K	925.18'	925.18'
Top of Piles	928.18'	928.18'

NOTE:

For General Notes, see Sheet No. 6.

All Reinforcing Steel to be epoxy coated in End Bents.

For Reinforcing Bar Notes, see Standard Dwg. E703-BRST-01.

For additional End Bent Details, see Sheet No. 8.

END BENT DETAILS

BRIDGE NO. 282
JERKWATER ROAD OVER McKENZIE DITCH
HAMILTON COUNTY, INDIANA

Sheet: 7 of 24	Project No: PB-09-0015	USI CONSULTANTS, 8415 East 56th Street, Indianapolis, Indiana 46216
Drawing File: 09127 BENT1	Scale: AS NOTED	

PAUL R. AIKINS REGISTERED No. PE10809497 STATE OF INDIANA PROFESSIONAL ENGINEER

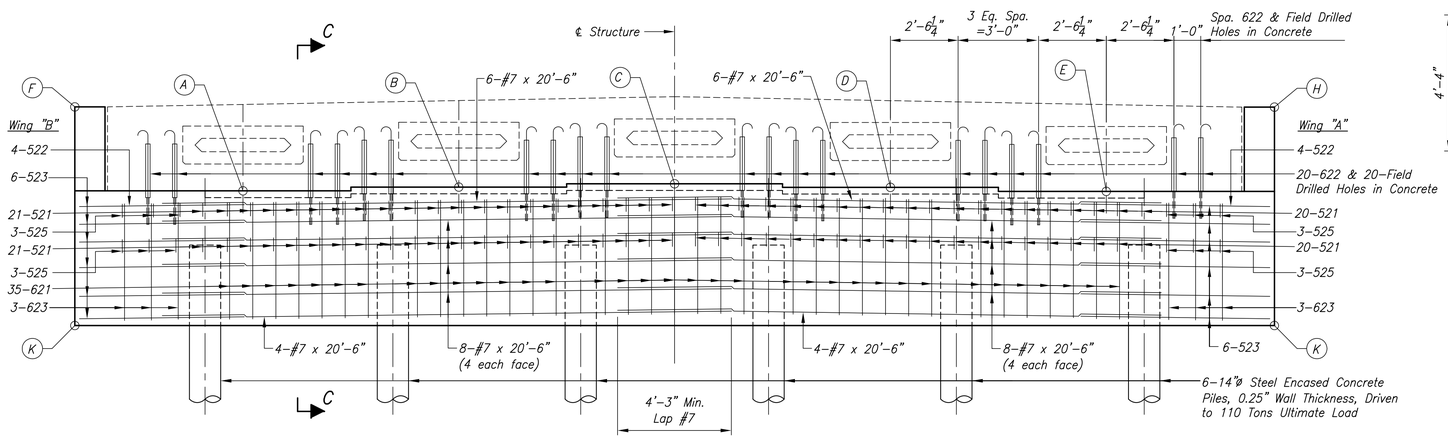

ELEVATION

Scale: ⅜"=1'-0"

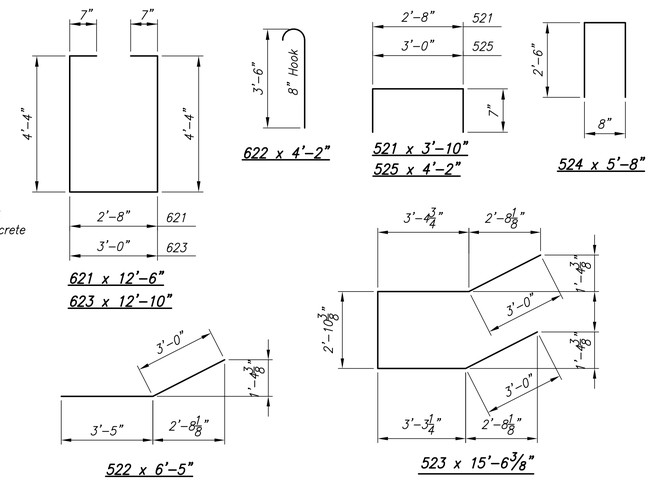

BAR BENDING DETAILS

No Scale

BILL OF MATERIALS END BENT NO.1 SHOWN (END BENT NO. 2 SAME UNLESS NOTED)

EPOXT COATED REINFORCING STEEL			
Size or Mark	No. of Bars	Length	Weight (lbs.)
#7	36	20'-6"	
		Total #7	1509 lbs.
621	35	12'-6"	
622	20	4'-2"	
623	6	12'-10"	
#6	4	11'-8"	
		Total #6	968 lbs.
521	82	3'-10"	
522	8	6'-5"	
523	12	15'-6⅜"	
524	26	5'-8"	
525	12	4'-2"	
#5	48	11'-8"	
#5	52	7'-9"	
		Total #5	1786 lbs.
Total Epoxy Coated Reinforcing Steel			4263 lbs.
CONCRETE			
Class "A" Concrete in Substructure			31.5 cys.
MISCELLANEOUS			
14" Steel Encased Concrete Piles, 6 @ 56'-3"			337.5 lft.
Surface Seal			136 sft.
Field Drilled Holes in Concrete			20 each

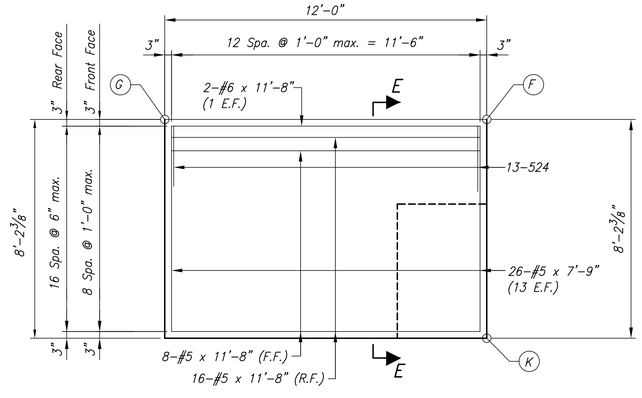

WINGWALL "B" ELEVATION

Scale : ⅜" = 1'-0"

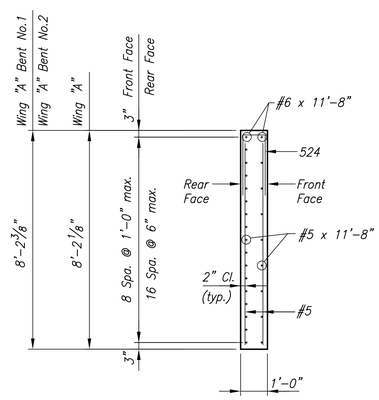

SECTION "E-E"

Scale : ⅜" = 1'-0"

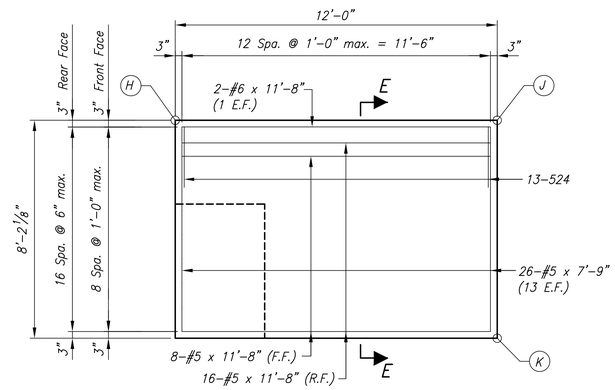

WINGWALL "A" ELEVATION

Scale : ⅜" = 1'-0"

TABLE OF ELEVATIONS		
POINT	BENT NO. 1	BENT NO. 2
A	930.20'	930.20'
B	930.35'	930.35'
C	930.48'	930.48'
D	930.34'	930.33'
E	930.18'	930.18'
F	933.38'	933.38'
G	933.38'	933.38'
H	933.36'	933.36'
J	933.36'	933.36'
K	925.18'	925.18'
Top of Piles	928.18'	928.18'

NOTE:

For General Notes, see Sheet No. 6.

All Reinforcing Steel to be epoxy coated in End Bents.

For Reinforcing Bar Notes, see Standard Dwg. E703-BRST-01.

For additional End Bent Details, see Sheet No. 7.

END BENT DETAILS

BRIDGE NO. 282
JERKWATER ROAD OVER McKENZIE DITCH
HAMILTON COUNTY, INDIANA

Sheet: 8 of 24	Project No: PB-09-0015	CONSULTANTS 8415 East 56th Street Indianapolis, Indiana 46216
Drawing File: 09127 BENT1	Scale: AS NOTED	

PAUL R. AIKINS REGISTERED No. PE10809497 STATE OF INDIANA PROFESSIONAL ENGINEER

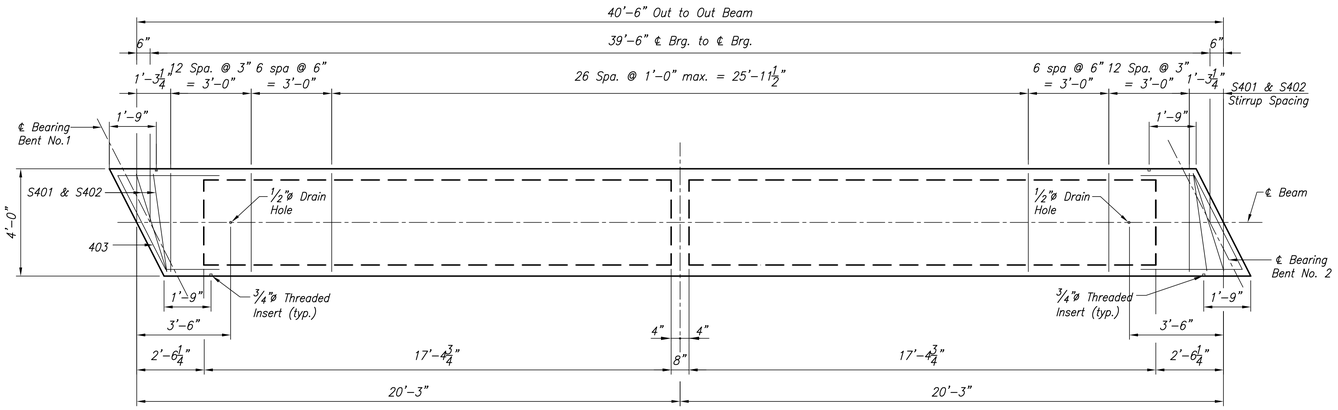

STIRRUP SPACING

Scale: 3/8" = 1'-0"

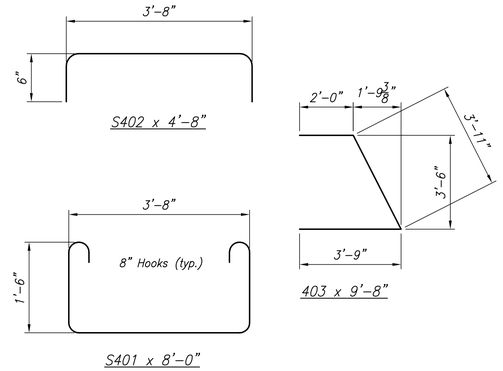

BAR BENDING DETAILS

No Scale

BEAM NOTES

Concrete Design Strength to be 6000 p.s.i. at 28 days for all beams.

The concrete strength must be 5000 p.s.i. before prestressing force is applied.

All strands to be Special 1/2"ø, 7 wire, 270K Special Lo-Lax Cable (As= 0.167 square inch). Initial tension per strand to be 33,815 PSI.

Beams to be supported at bearing points while stored and while transporting to the job site.

The beam manufacturer shall equip the beams with removable handling hooks and the contractor shall follow the manufacturer's recommendations for handling and erection.

The outside face of the outside beams and the ends of all beams shall be surface sealed prior to shipment by the beam manufacturer. Do not rub.

See Standard Drawings 707-BPBF-01 and 707-BPBF-03 in regard to concrete tolerances and general notes.

Top of beams to be scored transversely at about 3" centers with a pointed tool, maximum depth 1/4".

The beam manufacturer shall furnish the Engineer, thru the Contractor, 5 sets of shop drawings for his approval prior to the casting of the beams.

is poured.

The beams shall be cast a minimum of 15 days before the deck

All Reinforcing Steel to be Epoxy Coated.

Use 2"ø Pin for bending all Reinforcing Steel in beams.

Surface Seal required on the top of beams all beams and the exterior face of exterior beams.

ESTIMATED BEAM CAMBER DATA

Initial Camber = 1.614 inches

Slab Deflection = -0.594 inches

Residual Camber = 1.020 inches

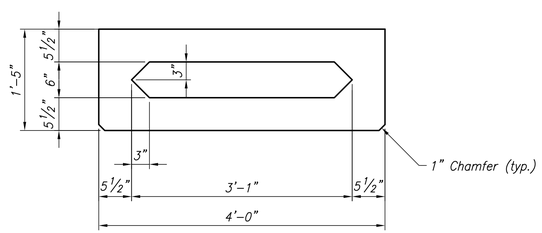

TYPICAL BEAM DIMENSIONS

Scale: 1" = 1'-0"

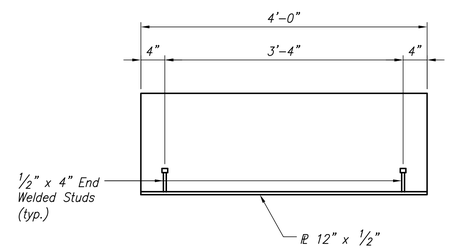

BEAM END DETAIL AT END BENTS

Scale: 1" = 1'-0"

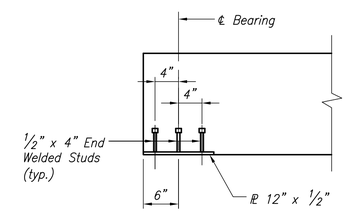

BEARING PLATE DETAIL

Scale: 1" = 1'-0"

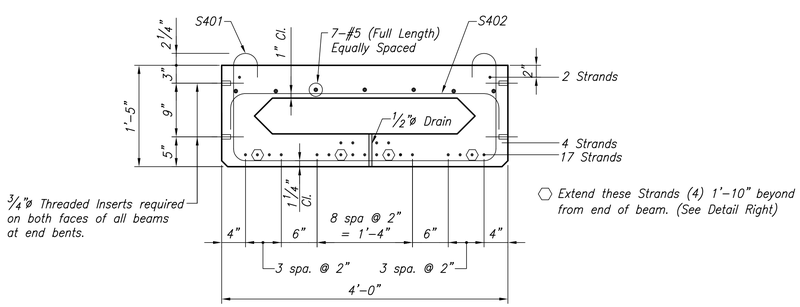

TYPICAL BEAM REINFORCING

Scale: 1" = 1'-0"

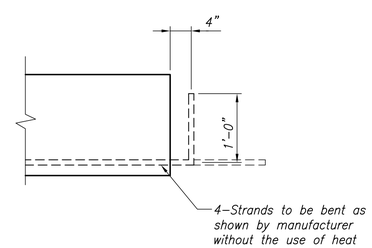

BEAM END DETAIL

Scale: 1" = 1'-0"

BEAM DETAILS

BRIDGE NO. 282
JERKWATER ROAD OVER McKINZIE DITCH
HAMILTON COUNTY, INDIANA

Sheet:	Project No:	
9 of 24	PB-09-0015	CONSULTANTS 8415 East 56th Street Indianapolis, Indiana 46216
Drawing File: 09127 Beam1	Scale: AS NOTED	

PAUL R. AIKINS REGISTERED No. PE10809497 STATE OF INDIANA PROFESSIONAL ENGINEER

TABLE OF ELEVATIONS		
POINT	BENT NO.1	BENT NO.2
A	933.38'	933.38'
B	933.75'	933.75'
C	933.36'	933.36'

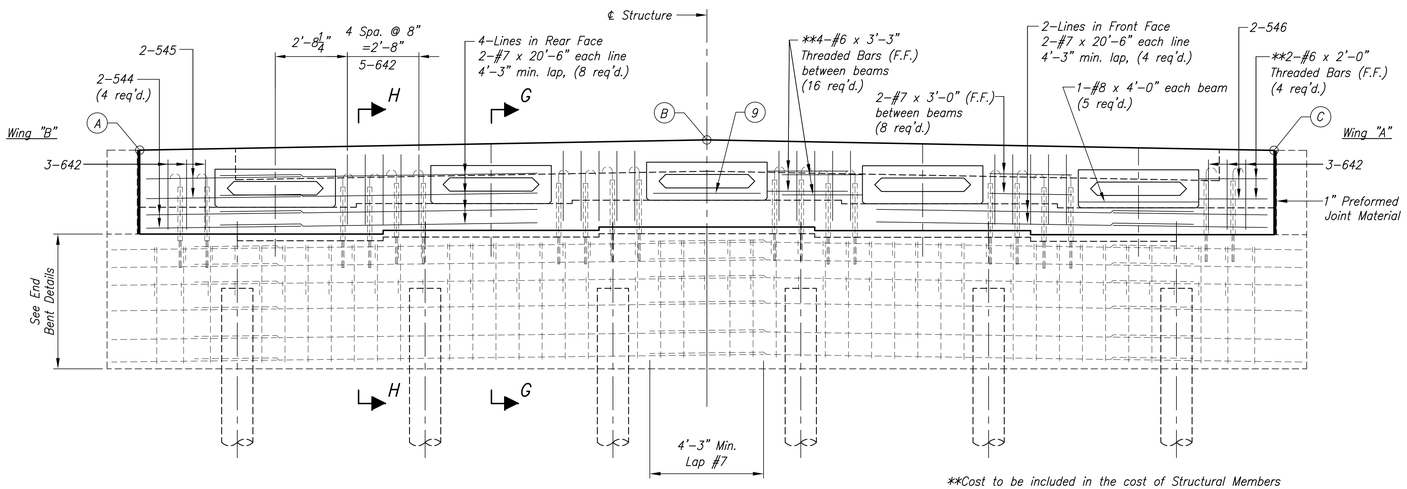

**Cost to be included in the cost of Structural Members

ELEVATION

Scale: 3/8"=1'-0"

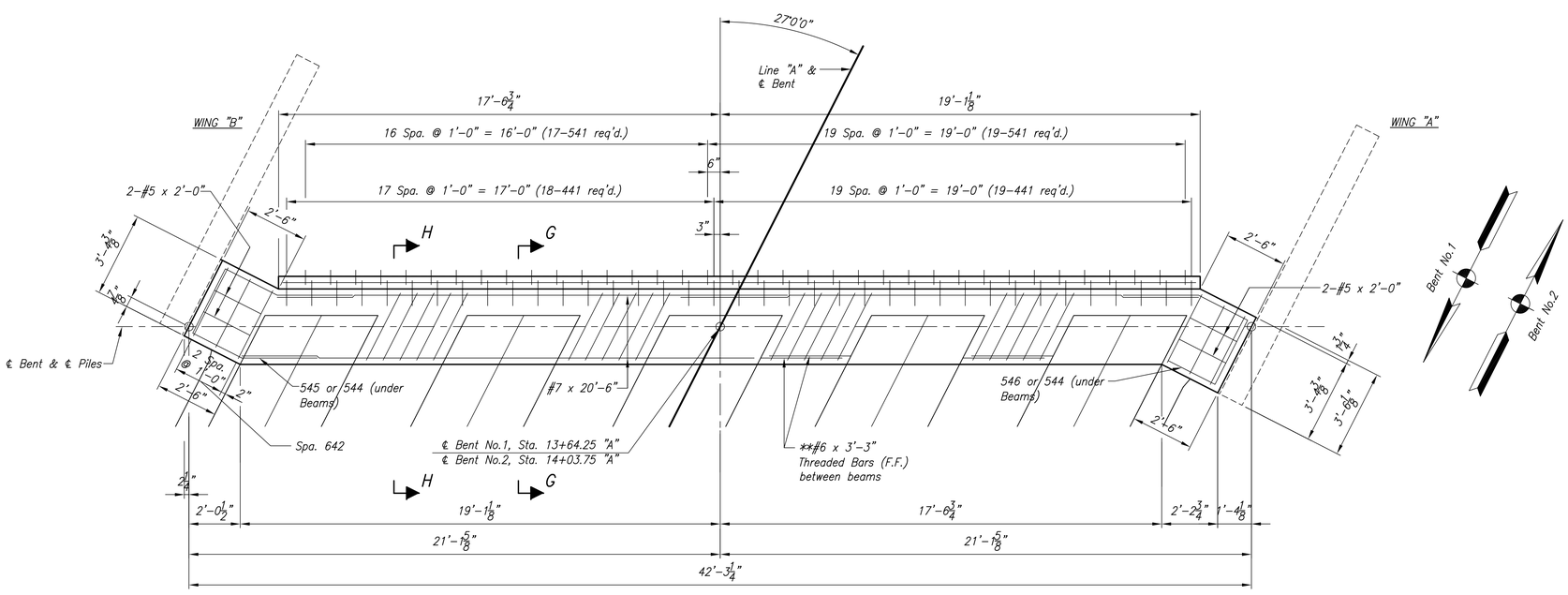

PLAN

Scale: 3/8"=1'-0"

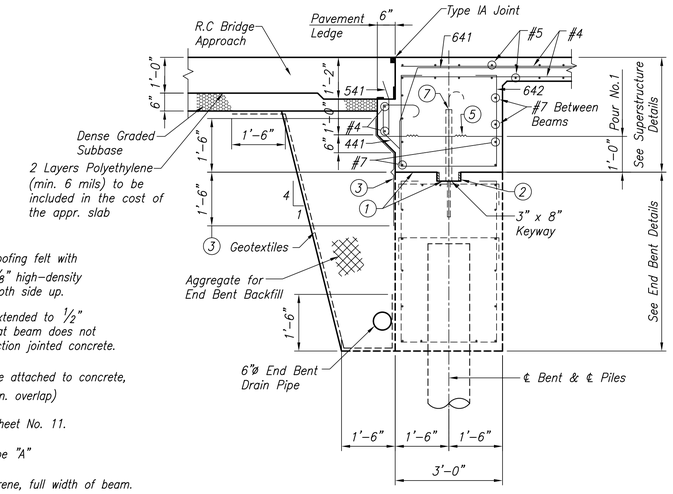

SECTION "H-H"

Scale: 1/2" = 1'-0"

1. 3 Layers of medium weight roofing felt with grease between layers over 1/8" high-density plastic bearing strip with smooth side up.
2. Expanded polystyrene to be extended to 1/2" outside limits of beam, so that beam does not come in contact with construction jointed concrete.
3. Polychoroprene joint membrane attached to concrete, 1/8" min. thickness. (1'-0" min. overlap)
4. Anchor Plate, see detail on Sheet No. 11.
5. Optional Construction Joint Type "A"
6. 1" Thickness expanded polystyrene, full width of beam.
7. 2" PVC Sleeve, top of sleeve to be sealed with expansion polyurethane foam sealant before concrete is poured.
8. 3/4"ø Insert for 3/4"ø x 3'-3" Threaded Rods (Cost to be included in the cost of Structural Members)
9. 1-#8 x 4'-0" each beam

Items 1 thru 7 are to be included in the cost of other items.

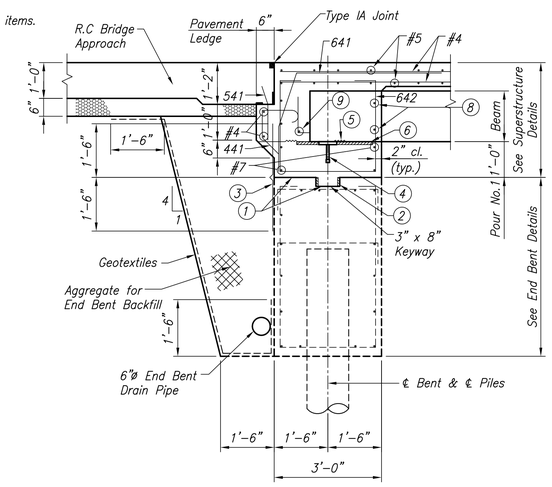

SECTION "G-G"

Scale: 1/2" = 1'-0"

NOTE:

For General Notes, see Sheet No. 6.

All Reinforcing Steel to be epoxy coated in Superstructure.

For Reinforcing Bar Notes, see Standard Dwg. E703-BRST-01.

For additional Superstructure Details, see Sheet No. 11.

SUPERSTRUCTURE DETAILS

BRIDGE NO. 282
JERKWATER ROAD OVER McKENZIE DITCH
HAMILTON COUNTY, INDIANA

Sheet: 10 of 24	Project No: PB-09-0015	CONSULTANTS 8415 East 56th Street Indianapolis, Indiana 46216	PAUL R. AIKINS REGISTERED No. PE10809497 STATE OF INDIANA PROFESSIONAL ENGINEER
Drawing File: 09127 SUP1	Scale: AS NOTED		

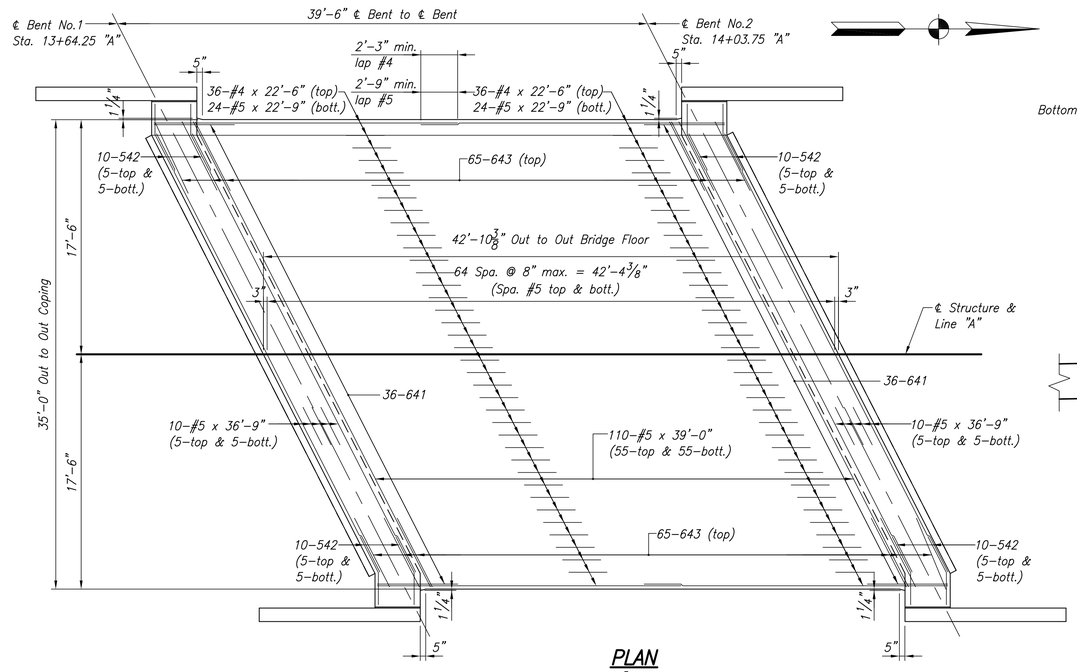

PLAN

Scale: 3/16"=1'-0"

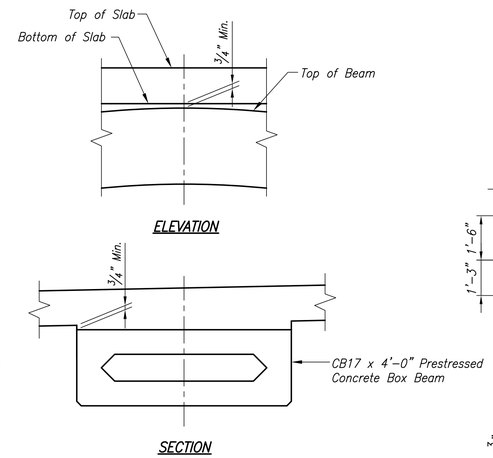

FILLET DETAILS

Scale 3/4" = 1'-0"

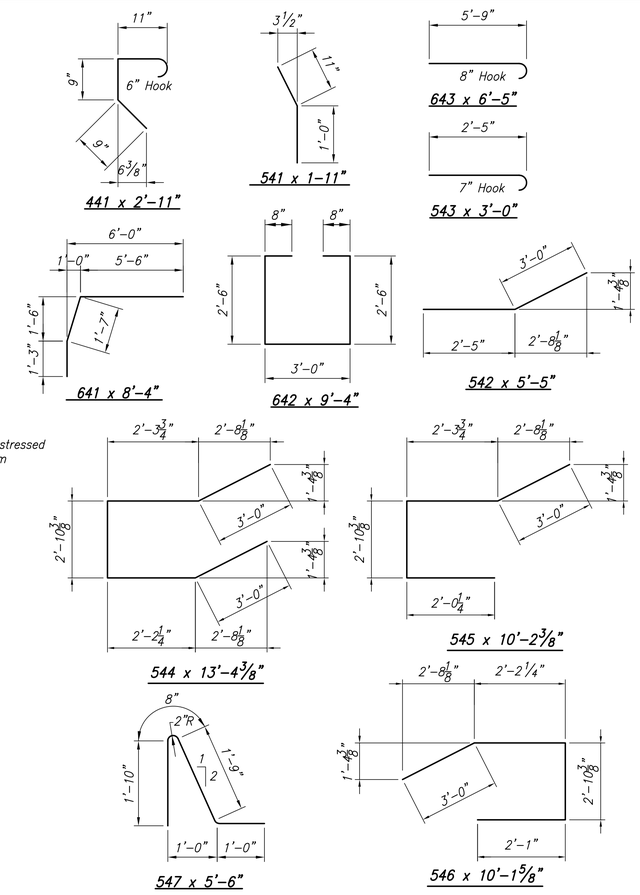

BAR BENDING DETAILS

No Scale

BILL OF MATERIALS SUPERSTRUCTURE

EPOXY COATED REINFORCING STEEL			
Size or Mark	No. of Bars	Length	Weight (lbs.)
#8	10	4'-0"	107 lbs.
#7	24	20'-6"	
#7	16	3'-0"	
Total #7			1104 lbs.
641	72	8'-4"	
642	52	9'-4"	
643	130	6'-5"	
Total #6			2883 lbs.
541	72	1'-11"	
542	40	5'-5"	
543	48	3'-0"	
544	8	13'-4 3/8"	
545	4	10'-2 3/8"	
546	4	10'-1 5/8"	
547	24	5'-6"	
#5	110	39'-0"	
#5	20	36'-9"	
#5	48	22'-9"	
#5	16	6'-9"	
#5	8	2'-0"	
Total #5			7363 lbs.
441	74	2'-11"	
#4	72	22'-6"	
Total #4			1226 lbs.
Total E.C. Reinforcing Steel			12,683 lbs.
CONCRETE			
Total Class "C" in Superstructure			65.6 cys.
Class "C" in Railing			1.4 cys.
MISCELLANEOUS			
Surface Seal			2036 sft.

Quantities for one Concrete Bridge Railing Transition Type WBC

Epoxy Coated Reinforcing Steel = 393 lbs.

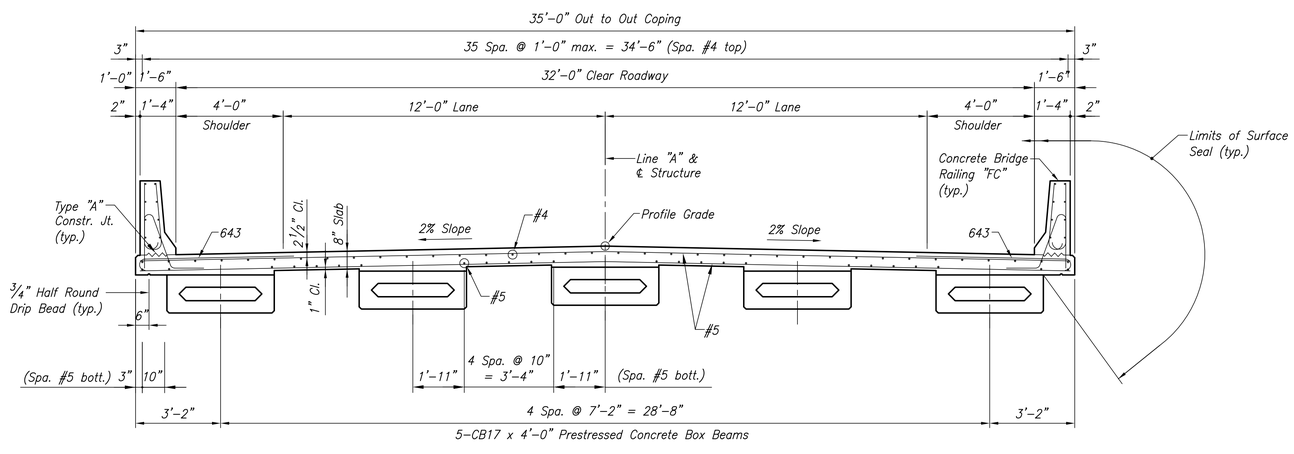

TYPICAL BRIDGE SECTION

Scale: 3/8"=1'-0"

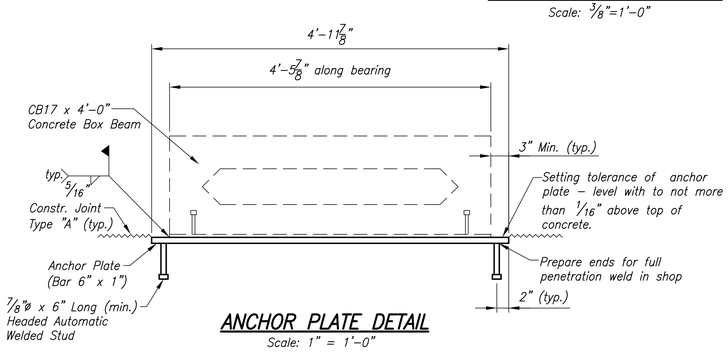

ANCHOR PLATE DETAIL

Scale: 1" = 1'-0"

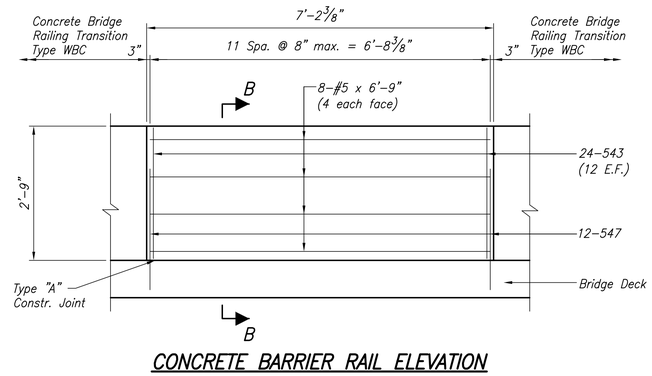

CONCRETE BARRIER RAIL ELEVATION

No Scale

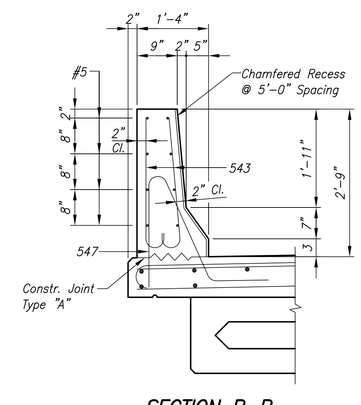

SECTION B–B

Scale: 3/4"=1'-0"

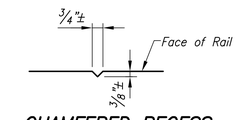

CHAMFERED RECESS

No Scale

NOTE:

For General Notes, see Sheet No. 6.

All Reinforcing Steel to be epoxy coated in Superstructure.

For Reinforcing Bar Notes, see Standard Dwg. E703–BRST–01.

For additional Superstructure Details, see Sheet No. 10.

SUPERSTRUCTURE DETAILS

BRIDGE NO. 282
JERKWATER ROAD OVER McKENZIE DITCH
HAMILTON COUNTY, INDIANA

Sheet: 11 of 24	Project No: PB–09–0015	CONSULTANTS 8415 East 56th Street Indianapolis, Indiana 46216	PAUL R. AIKINS REGISTERED No. PE10809497 STATE OF INDIANA PROFESSIONAL ENGINEER
Drawing File: 09127 SUP2	Scale: AS NOTED		

POINT	LOCATION	1	2	3	4	5
1	Elevation – Top of Slab @ Coping	933.386	933.442	933.465	933.456	933.414
	Elevation – Top of Form					
	Distance – Top of Beam to top of Slab @ Coping					
2	Elevation – Top of Screed	933.453	933.507	933.530	933.519	933.476
	Elevation – Top of Beam					
	Distance – Top of Beam to top of Screed					
3	Elevation – Top of Screed	933.604	933.655	933.675	933.661	933.615
	Elevation – Top of Beam					
	Distance – Top of Beam to top of Screed					
4	Elevation – Top of Slab @ Crown	933.754	933.802	933.818	933.801	933.753
	Elevation – Top of Beam					
	Distance – Top of Beam to top of Slab @ Crown					
5	Elevation – Top of Screed	933.615	933.661	933.674	933.655	933.603
	Elevation – Top of Beam					
	Distance – Top of Beam to top of Screed					
6	Elevation – Top of Screed	933.476	933.519	933.529	933.507	933.452
	Elevation – Top of Beam					
	Distance – Top of Beam to top of Screed					
7	Elevation – Top Of Slab @ Coping	933.414	933.456	933.465	933.441	933.385
	Elevation – Top of Form					
	Distance – Top of Beam to top of Slab @ Coping					

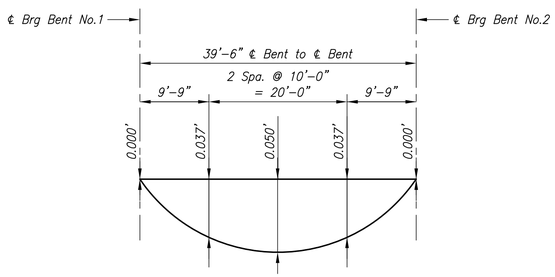

CONCRETE DEADLOAD DEFLECTIONS (IN FEET)

No Scale

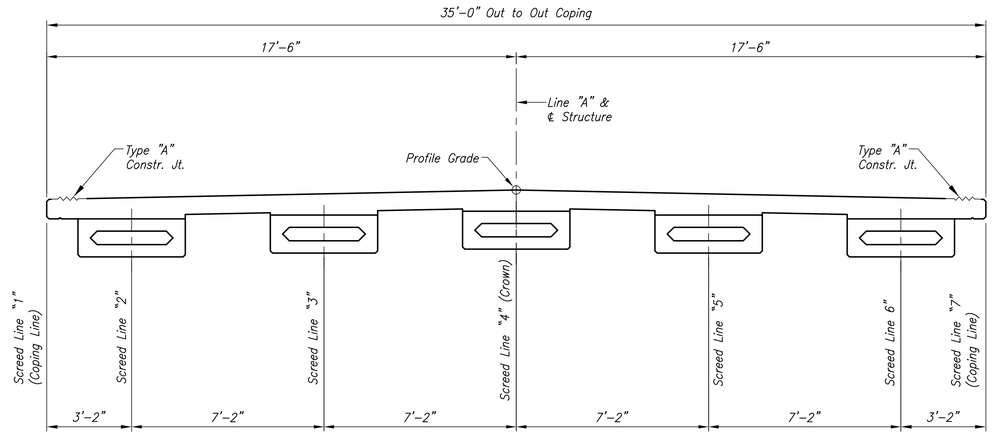

TYPICAL BRIDGE SECTION

Scale: $\frac{3}{8}$"=1'–0"

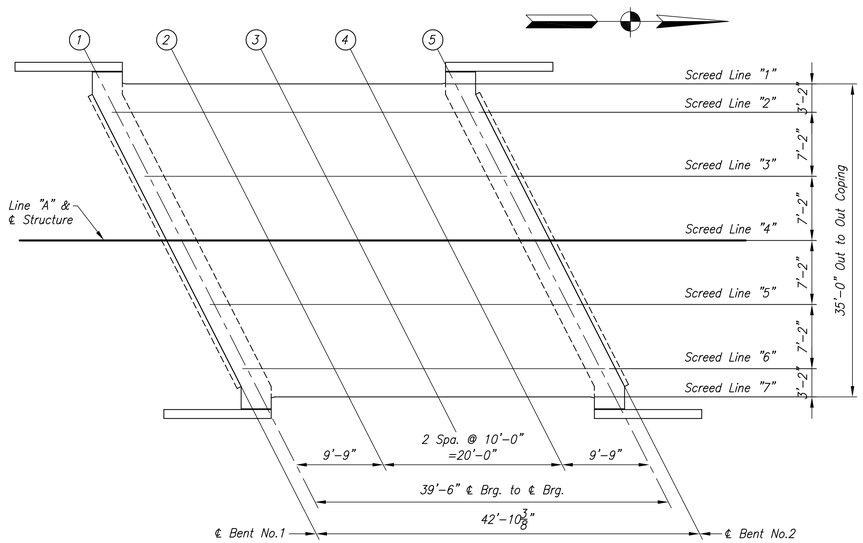

PLAN

Scale: $\frac{1}{8}$" = 1'–0"

SCREED NOTES:

Take elevations at all screed points on top of beams adjacent to the screed points. Subtract these elevations from the elevations tabulated and use the resulting dimensions as the height for setting the screed or coping above the point. This dimension remains constant regardless of the amount or the order of the concrete pour. Do not set screeds or coping forms by leveling. No concrete in the floor shall be poured until the above operations are completed.

The effect of Dead Load Deflection is included in the tabulated elevations.

NOTES:

For General Notes, see Sheet No. 6

SCREED DETAILS

BRIDGE NO. 282
JERKWATER ROAD OVER McKENZIE DITCH
HAMILTON COUNTY, INDIANA

Sheet: 12 of 24	Project No: PB–09–0015
Drawing File: 09127 BENT1	Scale: AS NOTED

CONSULTANTS
8415 East 56th Street
Indianapolis, Indiana 46216

PAUL R. AIKINS
REGISTERED
No. PE10809497
STATE OF INDIANA
PROFESSIONAL ENGINEER

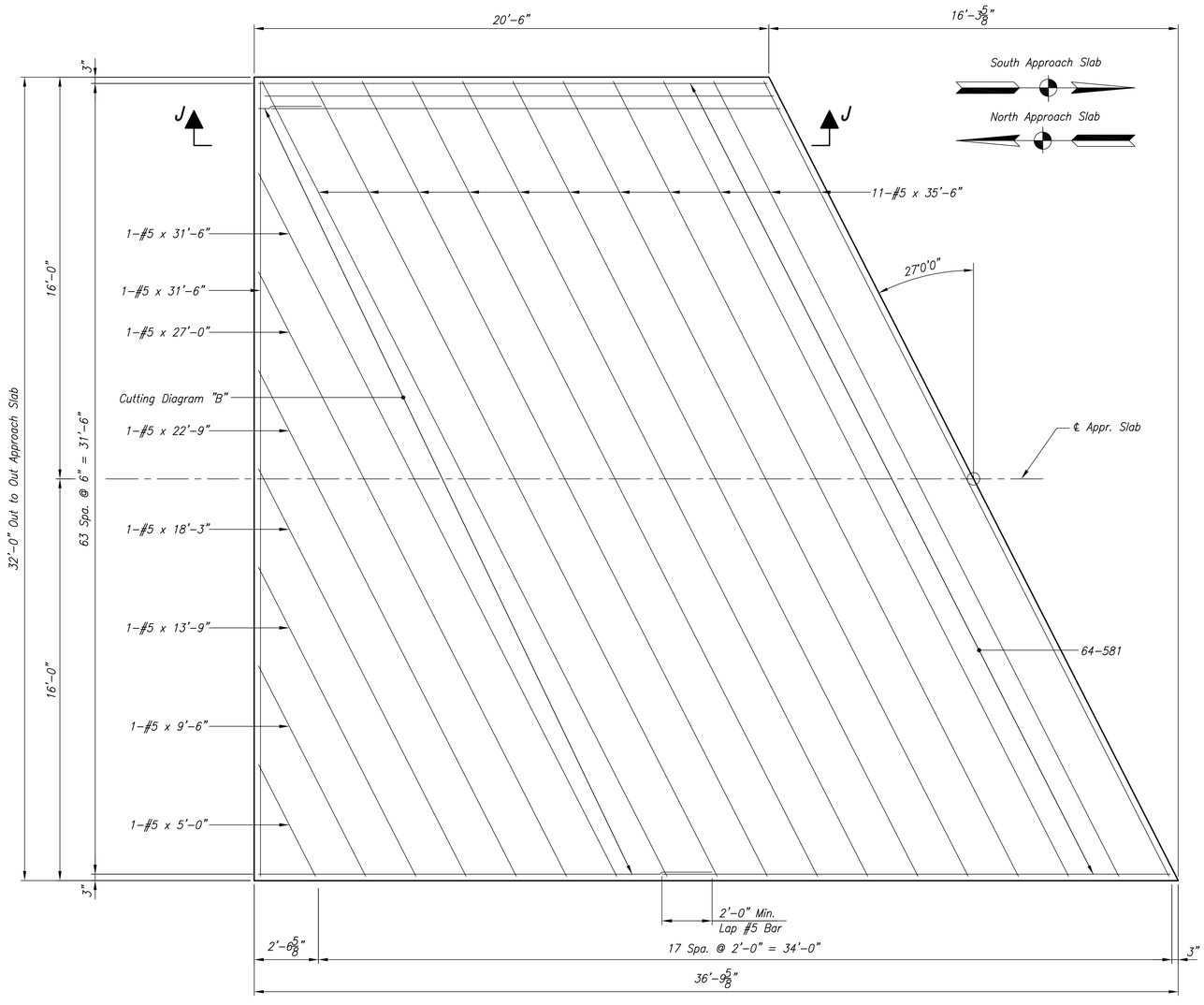

PLAN–SOUTH APPROACH SHOWING BOTTOM REINFORCING (NORTH APPROACH SAME BY 180° ROTATION)

Scale: 3/8" = 1'-0"

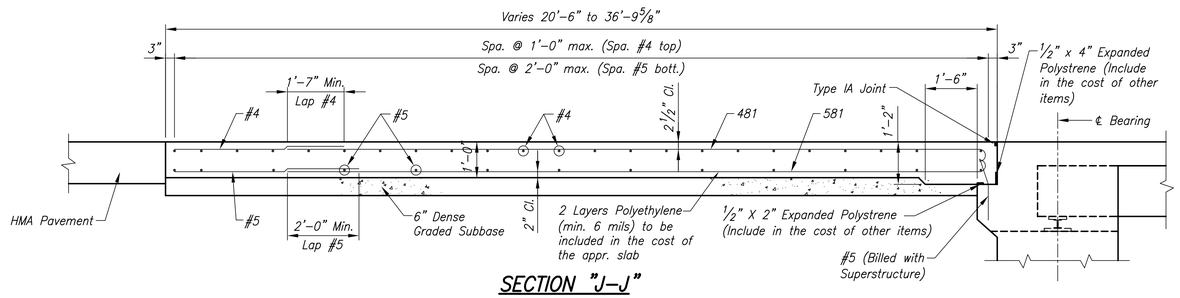

SECTION "J–J"

Scale: 1/2"=1'-0"

NOTES:

For additional Approach Slab Details, see Sheet No. 14.

All Reinforcing Steel to be epoxy coated in Approach Slab.

For Type IA Joint, see Standard Drawings E503–CCPJ–05 and E609–BRJT–01.

For Reinforcing Bar Notes, see Standard Drawing E–703–BRST–01.

For General Notes, See Sheet No. 6.

APPROACH SLAB DETAILS

BRIDGE NO. 282
JERKWATER ROAD OVER McKINZIE DITCH
HAMILTON COUNTY, INDIANA

Sheet: 13 of 24	Project No: PB–09–0015
Drawing File: 09127 Appr1	Scale: AS NOTED

CONSULTANTS
8415 East 56th Street
Indianapolis, Indiana 46216

PAUL R. AIKINS
REGISTERED
No. PE10809497
STATE OF INDIANA
PROFESSIONAL ENGINEER

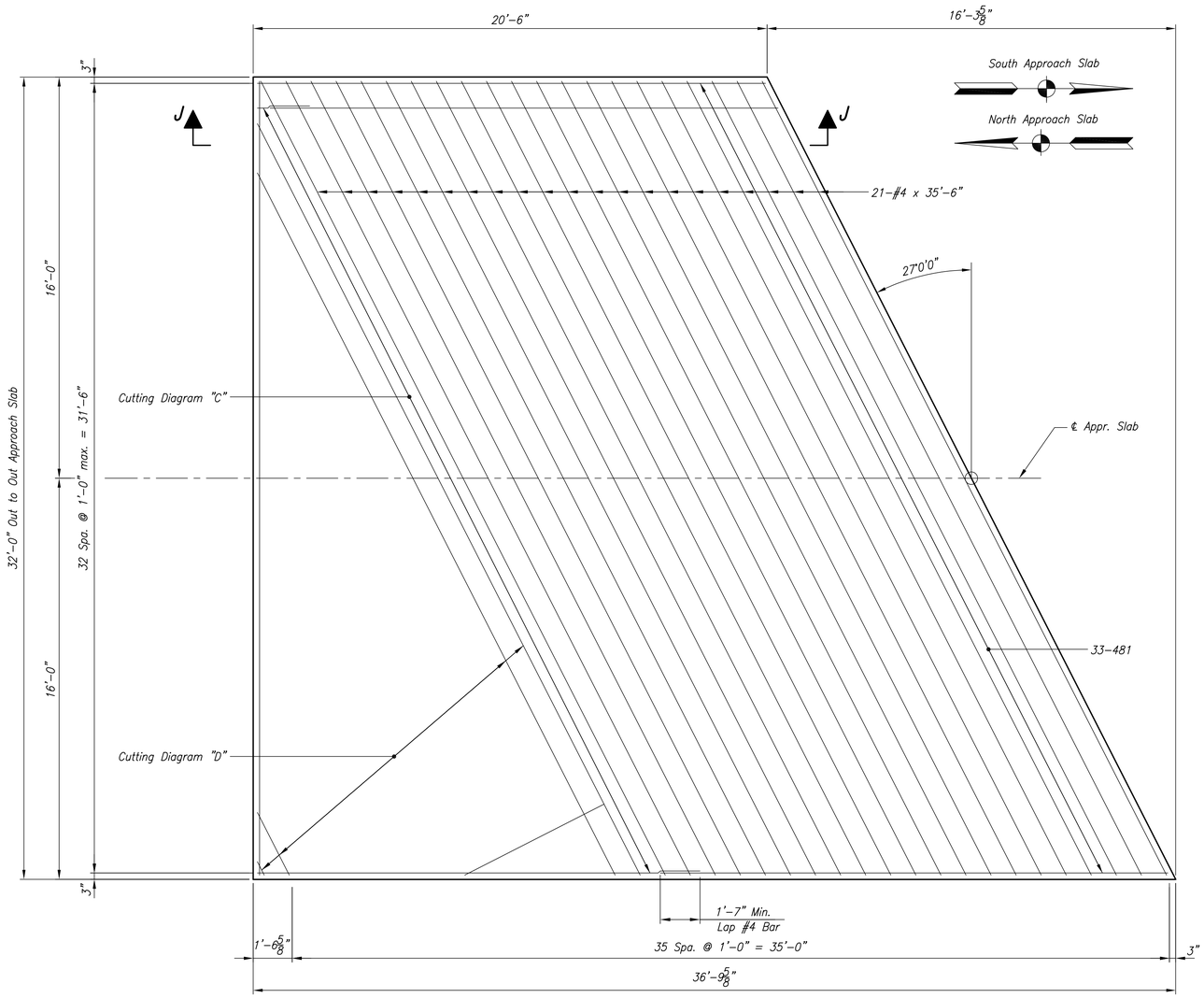

PLAN-SOUTH APPROACH SHOWING TOP REINFORCING
(NORTH APPROACH SAME BY 180° ROTATION)

Scale: 3/8" = 1'-0"

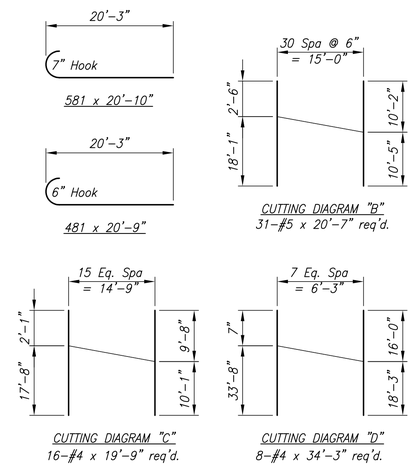

BAR BENDING DETAILS

No Scale

BILL OF MATERIALS
SOUTH APPROACH SLAB
NORTH APPROACH SLAB SAME

EPOXY COATED REINFORCING STEEL			
Size or Mark	No. of Bars	Length	Weight (lbs.)
581	64	20'-10"	
#5	11	35'-6"	
#5	2	31'-6"	
#5	1	27'-0"	
#5	1	22'-9"	
#5	31	20'-7"	
#5	1	18'-3"	
#5	1	13'-9"	
#5	1	9'-6"	
#5	1	5'-0"	
Total #5			1892 lbs.
481	33	20'-9"	
#4	21	35'-6"	
#4	8	34'-3"	
#4	16	19'-9"	
Total #4			1350 lbs.
Total E.C. Reinforcing Steel			3242 lbs.
CONCRETE			
R.C. Bridge Approach, 12"			102 sys.
MISCELLANEOUS			
Dense Graded Subbase			17 cys.
Surface Seal			917 sft.

NOTES:

For additional Approach Slab Details, see Sheet No. 13.

All Reinforcing Steel to be epoxy coated in Approach Slab.

For Type IA Joint, see Standard Drawings E503-CCPJ-05 and E609-BRJT-01.

For Reinforcing Bar Notes, see Standard Drawing E-703-BRST-01.

For General Notes, See Sheet No. 6.

APPROACH SLAB DETAILS

BRIDGE NO. 282
JERKWATER ROAD OVER McKINZIE DITCH
HAMILTON COUNTY, INDIANA

Sheet: 14 of 24	Project No: PB-09-0015	CONSULTANTS 8415 East 56th Street Indianapolis, Indiana 46216	PAUL R. AIKINS REGISTERED No. PE10809497 STATE OF INDIANA PROFESSIONAL ENGINEER
Drawing File: 09127 Appr2	Scale: AS NOTED		

SUMMARY OF BRIDGE QUANTITIES

ITEM	CONCRETE CLASS C SUPERSTR	CONCRETE CLASS A SUBSTR	CONCRETE CLASS B IN FTG.	CONCRETE RAILING CLASS C		EPOXY COATED REINF. STEEL	PILES CONC. STEEL SHELL ENCASED		PILES REINF. CONC. STEEL SHELL ENCASED EPOXY COAT.		PILES STEEL H HP12 x 53		PILES STEEL H EPOXY COATED		PILES STEEL H REINF. CONC. ENCASED		PILES PILE TIP STEEL H	PILES CORED HOLES IN ROCK		SURFACE SEAL **	FIELD DRILLED HOLES IN CONCRETE	DENSE GRADED SUBBASE	R.C. BRIDGE APPROACH	STRUCTURAL MEMBERS BOX BEAMS CB17 x 4'-0"	CONCRETE BRIDGE RAILING TRANSITION WBC
	cys	cys	cys	cys	lft.	lbs.	no.	lft.	no.	lft.	no.	lft.	no.	lft.	no.	lft.	each	no.	lft.	sft.	each	cys.	sys.	sys.	each
SUPERSTRUCTURE	65.6			1.4		14,255														2036				810	4
END BENT NO. 1		31.5				4263	6	337.5												136	20				
END BENT NO. 2		31.5				4263	6	337.5												136	20				
SOUTH APPROACH SLAB						3242														917		17	102		
NORTH APPROACH SLAB						3242														917		17	102		
TOTALS	65.6	63.0		1.4		29,265	12	675												4142	40	34	204	810	4

** ESTIMATED QUANTITY

PAVEMENT QUANTITIES AND APPROACH TABLE

LOCATION	DESCRIPTION (APPROACH TYPE OR CLASS)	WIDTH	LENGTH	RADII	DISTANCE BEYOND R/W LINE	SURFACE BEYOND R/W LINE COMPACTED AGGREGATE BASE	SURFACE BEYOND R/W LINE HMA	SURFACE BEYOND R/W LINE CONCRETE	GRADE 1	GRADE 2	EXCAVATION CUT	EXCAVATION FILL	CLEAR ZONE AT DRIVE	HMA FOR APPROACHES TYPE "A" SURFACE 9.5 mm		HMA FOR APPROACHES TYPE "A" INTERMD. 19.0 mm		HMA FOR APPROACHES TYPE "A" BASE 25.0 mm		HMA MATERIALS–TYPE "B" SURFACE 9.5 mm		HMA MATERIALS–TYPE "B" INTERMD. 19.0 mm		HMA MATERIALS–TYPE "B" BASE 25.0 mm		HMA BASE 25.0 mm, SHLDR.		6" PCCP	SEAL COAT TYPE 5	BITUMINOUS MATERIAL FOR PRIME COAT	BITUMINOUS MATERIAL FOR TACK COAT	COMPACTED AGGREGATE FOR BASE NO. 53 DEPTH (in.) 6	COMPACTED AGGREGATE FOR BASE NO. 53 DEPTH (in.) 8	COMPACTED AGGREGATE FOR SURFACE NO. 73 DEPTH (in.)	COMPACTED AGGREGATE FOR SURFACE NO. 73 DEPTH (in.)	HMA MILLING	PAVEMENT REMOVAL	SUBGRADE TREATMENT TYPE IIIA	SUBGRADE TREATMENT TYPE III
		ft.	ft.	ft.	ft.	tons	tons	sft.	%	%	cys	cys	ft.	lbs./syd.	tons	lbs./syd.	tons	lbs./syd.	tons	lbs./syd.	tons	lbs./syd.	tons	lbs./syd.	tons	lbs./syd.	tons	sys.	sft	tons	tons	tons	tons	tons	tons	sys.	sys.	sys.	sys.
Sta. 11+00 to Sta. 16+75 "A"	Mainline																			165	132	330	266	1100	896								4				1163		1885
Sta. 12+94 "A", LT.	Mod. Class V	24	40.4'	25,15	0				10					165	9.7	385	22.6																					117	
Sta. 12+94 "A", RT.	Mod. Class V	24	37.8'	25,15	0				10					165	9.1	385	21.3																					110	
Sta. 14+49 "A", LT.	Mod. Class V	24	37.8'	25,15	0				10					165	9.1	385	21.3																					110	
Sta. 14+41 "A", RT.	Mod. Class V	24	31.7'	25,20	0				10																														
TOTALS															27.9		65.2				132		266		896								4				1163	337	1885

APPROACH STRUCTURES

STRUCTURE NUMBER	LOCATION STATION	LOCATION LEFT	LOCATION RIGHT	LOCATION CROSS	SIZE	DESCRIPTION TYPE	DESCRIPTION KIND	LENGTH	SKEW	FLOW LINE COVER	FLOW LINE UP STREAM	FLOW LINE DOWN STREAM	BACKFILL METHOD	STRUCTURE BACKFILL	REVETMENT RIPRAP	CONCRETE CLASS "A"	PIPE END SECTION	AGGREGATE FOR END BENT BACKFILL	GEOTEXTILES	GRATED BOX END SECTION type	GRATED BOX END SECTION slope	CONNECT TO STR.	REMARKS
					inches			lft.		ft.	elev.	elev.		cys.	tons	cys.	ea.	cys.	sys.	type	slope		
11	12+94 "A"	X			15	3		38		2	928.39	928.15					2						
12	12+94 "A"		X		15	3		43		2	927.78	927.35					2						
13	13+62 "A"			X	6		End Bent Drain Pipe	60										34	67				
14	14+07 "A"			X	6		End Bent Drain Pipe	60										34	67				
15	14+49 "A"	X			15	3		40		2	928.19	927.93					2						
16	14+54 "A"		X		15	3		48		2	927.94	927.46					2						

** Field Verify

R/W MARKERS

STATION	LINE	OFFSET	LEFT	RIGHT
9+85	"A"	30.0'	X	
10+95	"A"	30.0'	X	
12+80	"A"	60.0'	X	
14+60	"A"	60.0'	X	
16+80	"A"	30.0'	X	
10+95	"A"	30.0'		X
12+70	"A"	60.0'		X
15+25	"A"	60.0'		X
16+00	"A"	30.0'		X
16+25	"A"	22.0'		X
16+50	"A"	20.0'		X
16+80	"A"	20.0'		X

SODDING SUMMARY TABLE

LOCATION FROM STATION	LOCATION TO STATION	LEFT	MEDIAN	RIGHT	ACTUAL LENGTH	RIPRAP DITCH REVETMENT RIPRAP	RIPRAP DITCH UNIFORM RIPRAP	RIPRAP DITCH GEOTEXTILES	SODDING FOR PAVED SIDE DITCHES	SODDING FOR DITCHES	SODDING FOR MEDIAN	SODDING FOR SHOULDER BREAK	SODDING AT BRIDGE CONE	TOTAL SODDING	NURSERY SODDING FOR LAWNS
					lft.	tons	tons	syd.	syd.	syd.	syd.	syd.	syd.	syd.	syd.
13+35.6	13+39.6	X											8		
13+52.3	13+56.3			X									10		
14+11.7	14+15.7	X											9		
14+28.4	14+32.4			X									8		
TOTALS													35		

GUARDRAIL SUMMARY TABLE

LOCATION FROM STATION	LOCATION TO STATION	LEFT	MEDIAN LEFT	MEDIAN RIGHT	RIGHT	W-BEAM GUARDRAIL AT 6.25 FT. SPA.	GUARDRAIL TRANSITION, WGB	MODIFIED GUARDRAIL TRANSITION, WGB (15'-0" RADIUS)	CURVED GUARDRAIL TERMINAL SYSTEM, TYPE 1	CURVED GUARDRAIL TERMINAL SYSTEM, TYPE 6	TYPE 5 ANCHOR
						LFT	EACH	EACH	EACH	EACH	EACH
13+10.26	13+58.51	X					1			1	
13+09.40	13+74.15				X	25	1		1		
13+92.84	14+32.59	X					1		1		
14+09.88					X			1			1
TOTALS						25	3	1	2	1	1

BENCHMARK

QTY.	LOCATION
1	SEE SPECIAL PROVISIONS

PAUL R. AIKINS REGISTERED No. PE10809497 STATE OF INDIANA PROFESSIONAL ENGINEER

DESIGNED: PRA | DRAWN: DWB
CHECKED: MJH | CHECKED: PRA

HAMILTON COUNTY
BRIDGE NO. 282

BRIDGE SUMMARY

HORIZONTAL SCALE	BRIDGE FILE
AS NOTED	HAMILTON 282
VERTICAL SCALE	DESIGNATION
AS NOTED	
SURVEY BOOK	SHEETS
	15 of 24
CONTRACT	PROJECT
	HCHD PB-09-0015

11+75

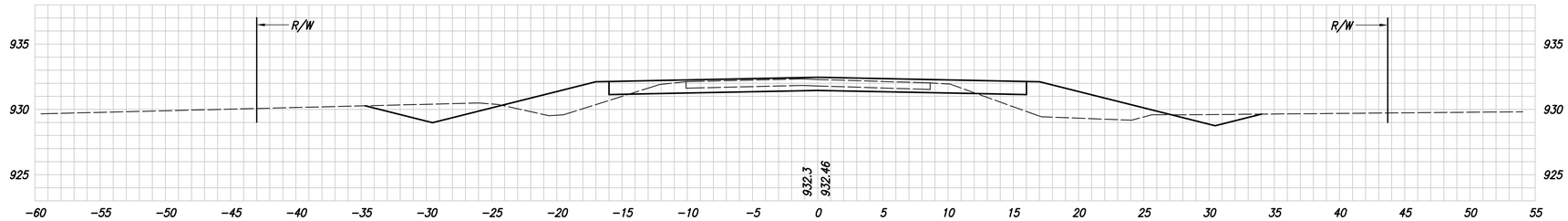

BEGIN PROJECT
STA. 11+75 "A"

AC=21.3 VC=20 AF=33.2 VF=27

11+50

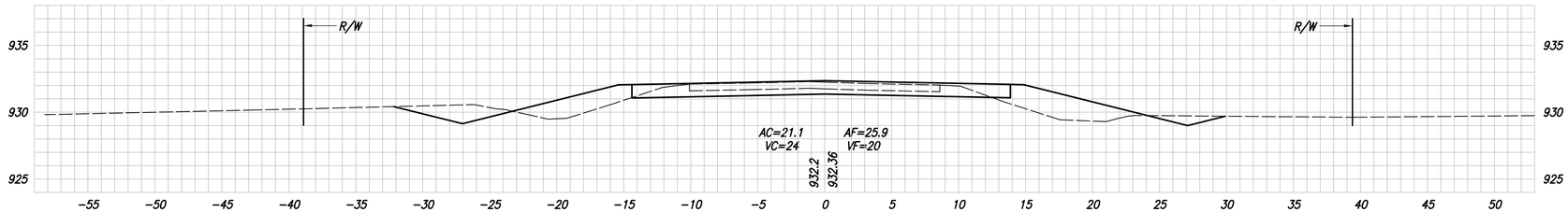

11+25

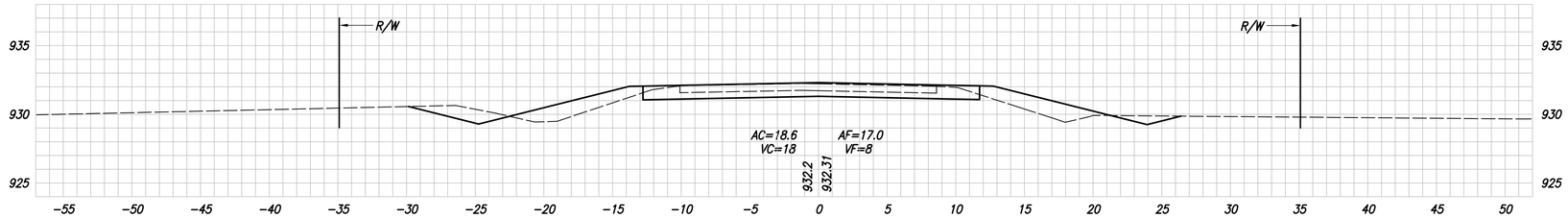

11+00

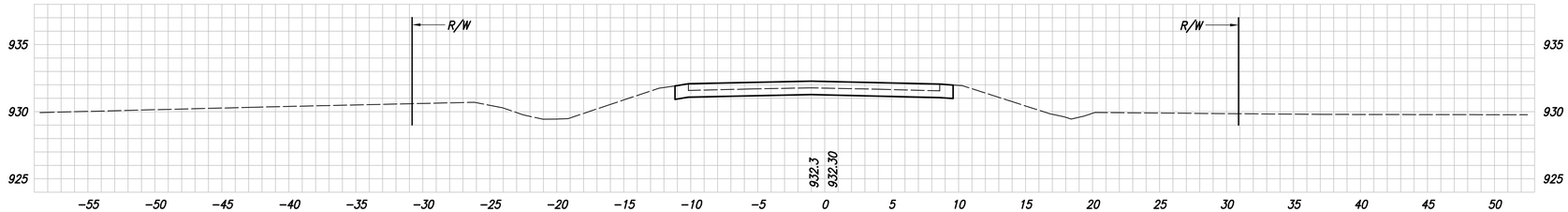

BEGIN INCIDENTAL CONSTRUCTION
STA. 11+00 "A"

AC=11.4 VC=0 AF=0 VF=0

DESIGNED: PRA	DRAWN: DWB	HAMILTON COUNTY BRIDGE NO. 282	HORIZONTAL SCALE 1" = 5' VERTICAL SCALE 1" = 5' BRIDGE FILE HAMILTON 282 DESIGNATION
CHECKED: MJH	CHECKED: PRA	CROSS SECTIONS LINE "A"	SURVEY BOOK SHEETS 16 of 24 CONTRACT PROJECT PB-09-0015

12+75

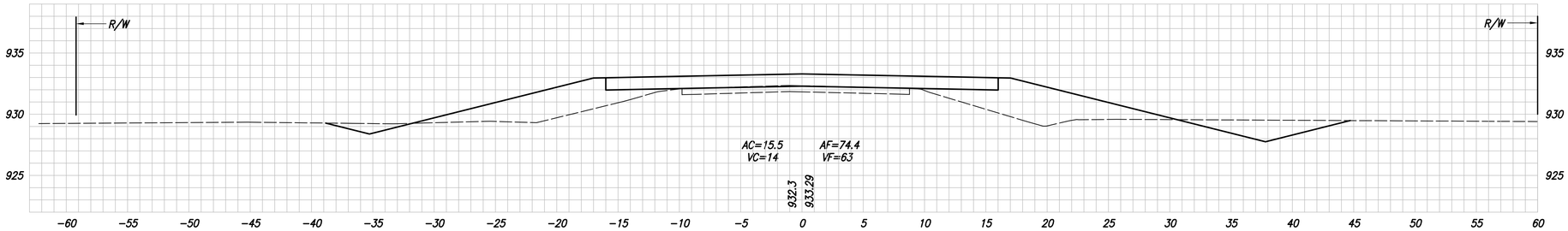

12+50

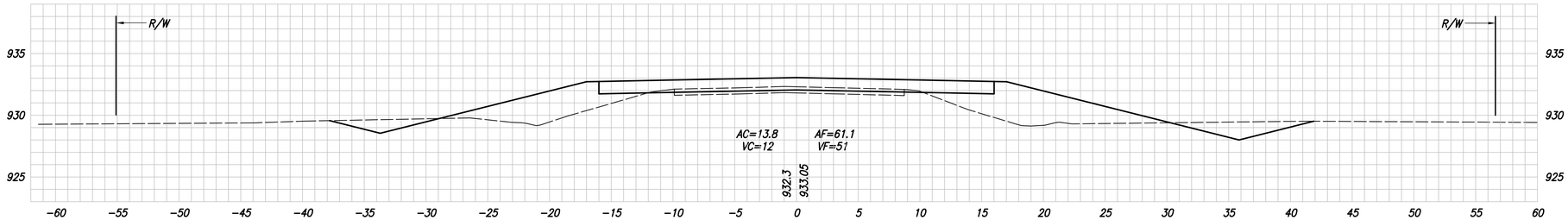

12+25

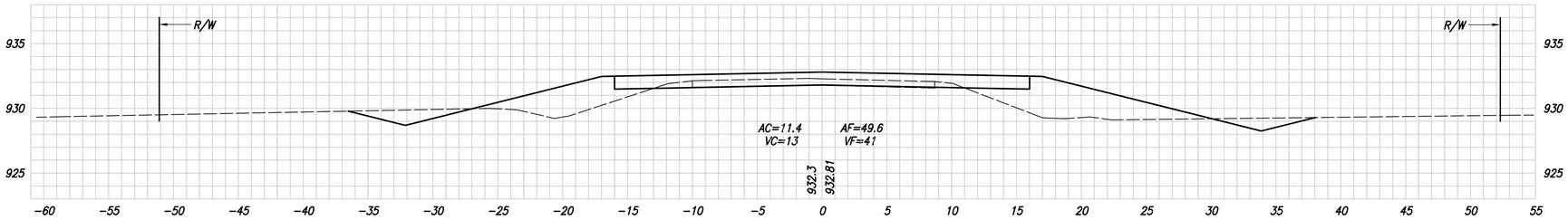

12+00

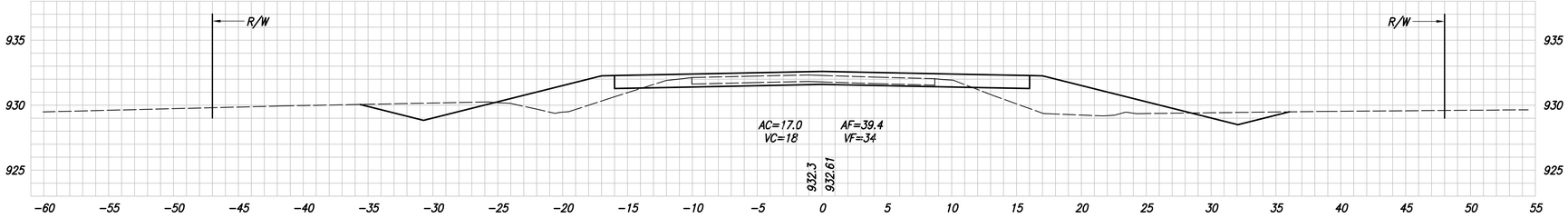

		HAMILTON COUNTY BRIDGE NO. 282	HORIZONTAL SCALE: 1" = 5' VERTICAL SCALE: 1" = 5' BRIDGE FILE: HAMILTON 282 DESIGNATION:
	DESIGNED: PRA CHECKED: MJH	DRAWN: DWB CHECKED: PRA	CROSS SECTIONS LINE "A"	SURVEY BOOK: SHEETS: 17 of 24 CONTRACT: PROJECT: PB-09-0015

BEGIN BRIDGE STRUCTURE
STA. 13+62.57 "A"
AC=23.7 AF=125.8
VC=11 VF=59

13+50

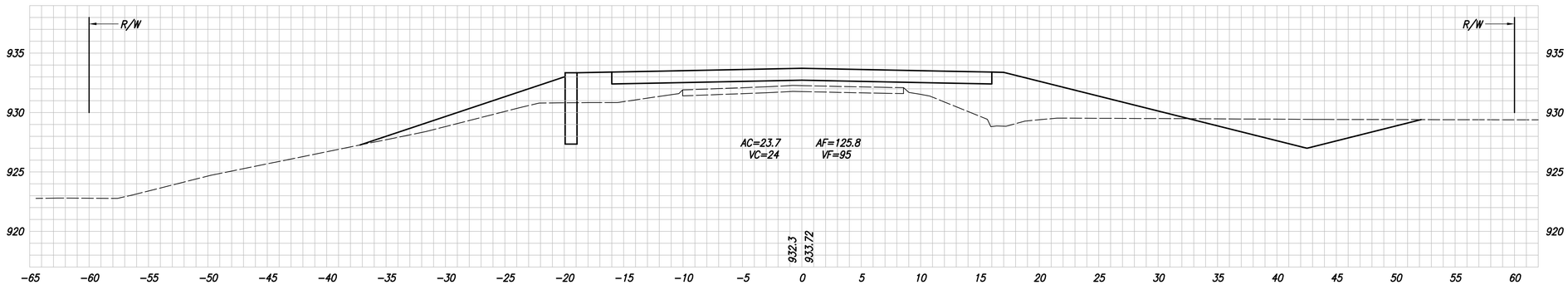

13+25

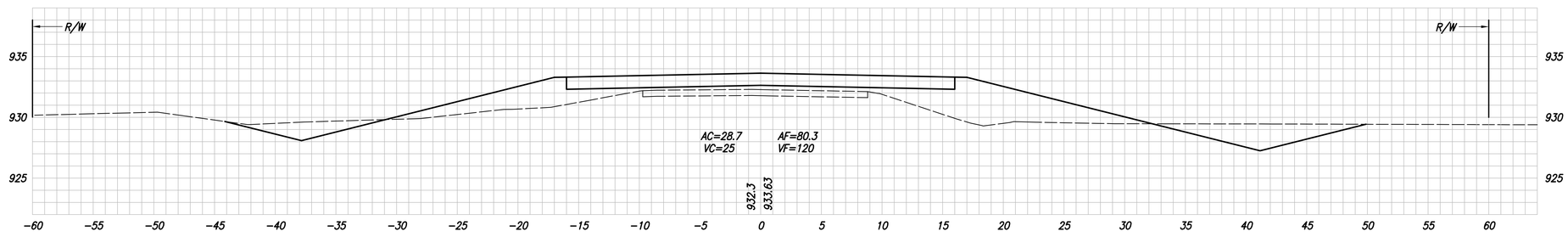

12+94

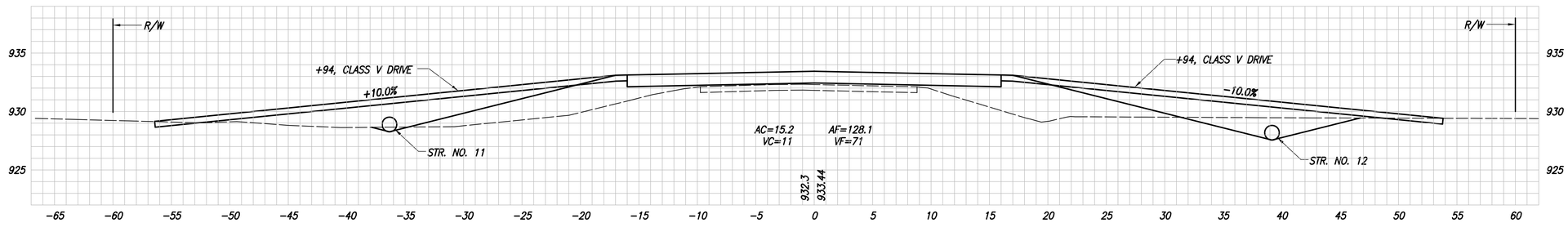

		HAMILTON COUNTY BRIDGE NO. 282	HORIZONTAL SCALE: 1" = 5' VERTICAL SCALE: 1" = 5' BRIDGE FILE: HAMILTON 282 DESIGNATION:
	DESIGNED: PRA CHECKED: MJH	DRAWN: DWB CHECKED: PRA	CROSS SECTIONS LINE "A"	SURVEY BOOK: SHEETS: 18 of 24 CONTRACT: PROJECT: PB-09-0015

14+25

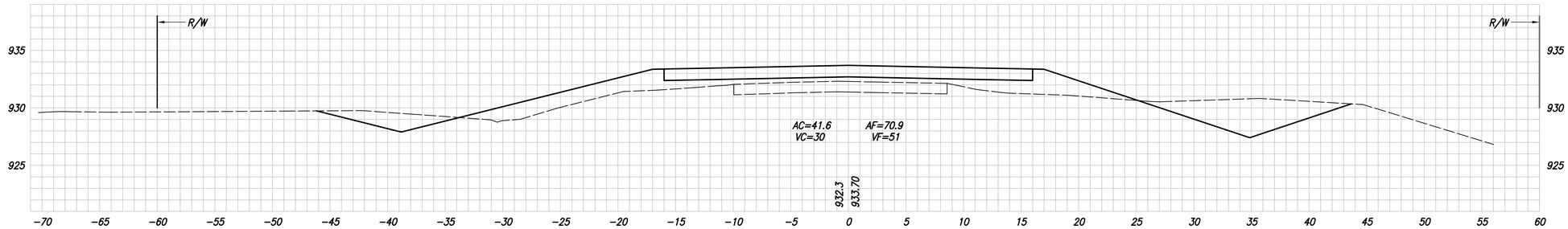

END BRIDGE STRUCTURE
STA. 14+05.43 "A"
AC=41.6 AF=70.9
VC=0 VF=0

14+00

13+75

		HAMILTON COUNTY BRIDGE NO. 282	HORIZONTAL SCALE: 1" = 5' VERTICAL SCALE: 1" = 5' BRIDGE FILE: HAMILTON 282 DESIGNATION:
	DESIGNED: PRA CHECKED: MJH	DRAWN: DWB CHECKED: PRA	CROSS SECTIONS LINE "A"	SURVEY BOOK: SHEETS: 19 of 24 CONTRACT: PROJECT: PB-09-0015

15+25

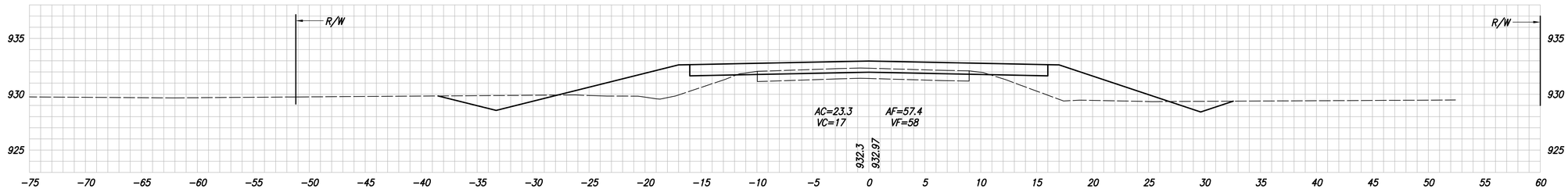

15+00

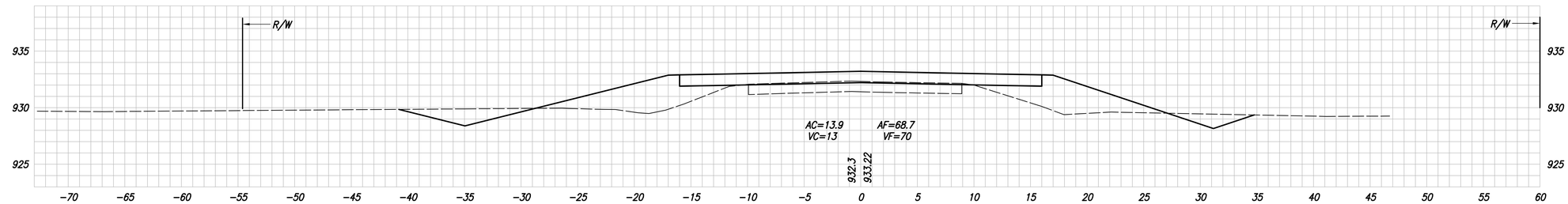

14+75

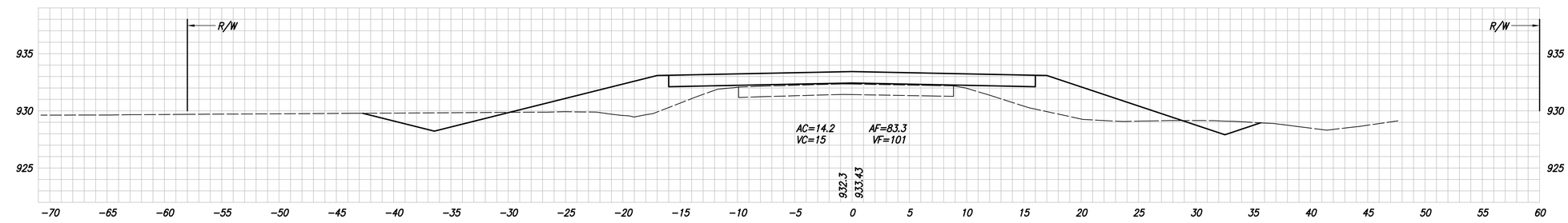

14+50

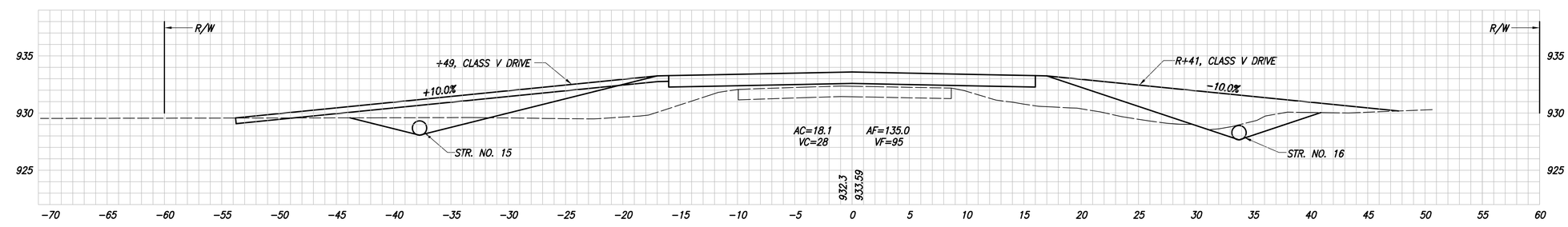

DESIGNED: PRA	DRAWN: DWB	HAMILTON COUNTY BRIDGE NO. 282	HORIZONTAL SCALE: 1" = 5' VERTICAL SCALE: 1" = 5' BRIDGE FILE: HAMILTON 282 DESIGNATION:
CHECKED: MJH	CHECKED: PRA	CROSS SECTIONS LINE "A"	SURVEY BOOK: SHEETS: 20 of 24 CONTRACT: PROJECT: PB-09-0015

16+25

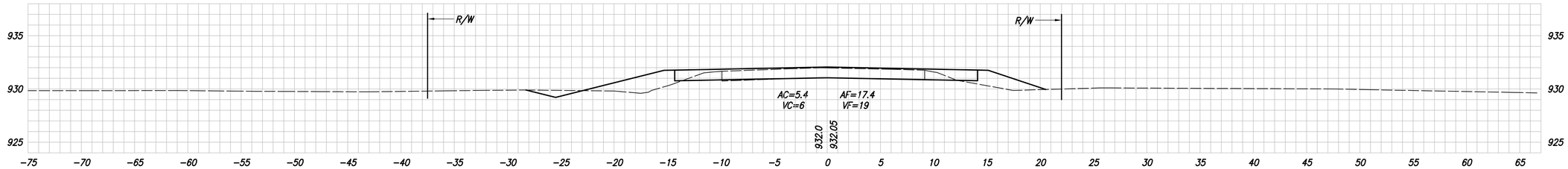

16+00

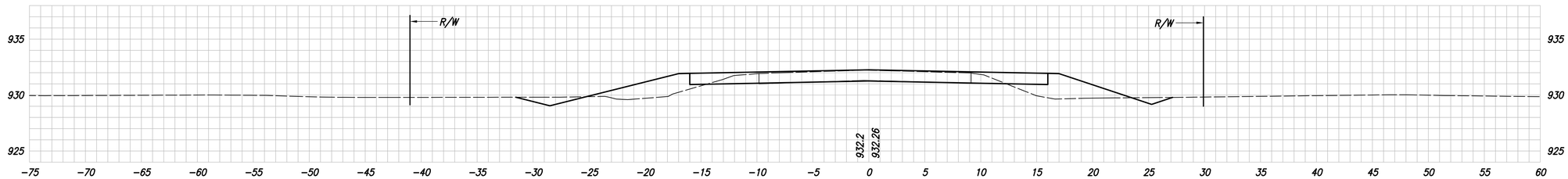

END PROJECT
STA. 16+00 "A"
AC=8.2 VC=9 AF=24.6 VF=25

15+75

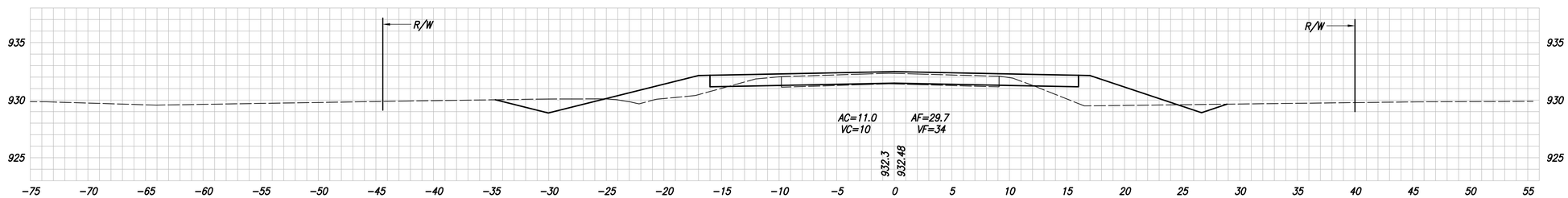

15+50

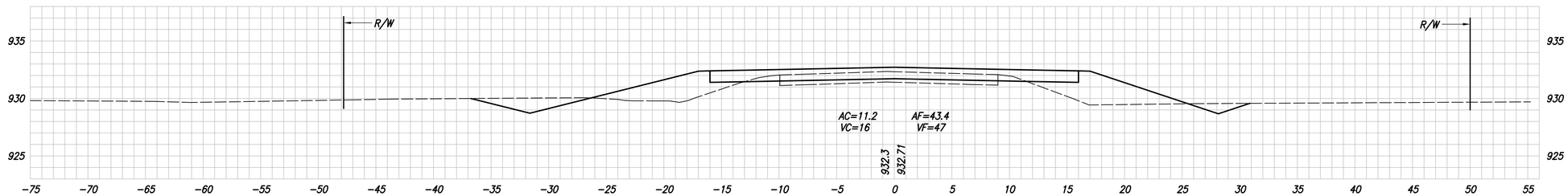

DESIGNED: PRA	DRAWN: DWB	HAMILTON COUNTY BRIDGE NO. 282	HORIZONTAL SCALE: 1" = 5' VERTICAL SCALE: 1" = 5' BRIDGE FILE: HAMILTON 282 DESIGNATION
CHECKED: MJH	CHECKED: PRA	CROSS SECTIONS LINE "A"	SURVEY BOOK SHEETS 21 of 24 CONTRACT PROJECT PB-09-0015

17+00

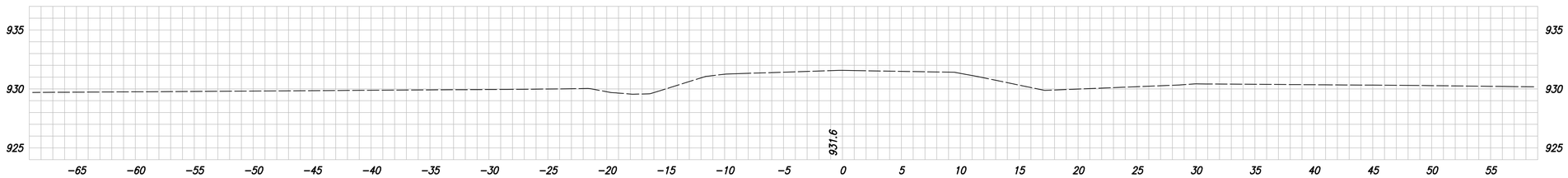

16+75

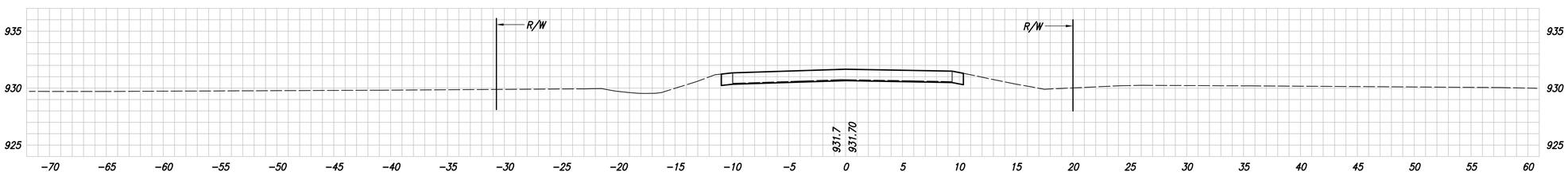

END INCIDENTAL CONSTRUCTION
16+75.00 "A"

AC=3.5 VC=4 AF=0 VF=6

16+50

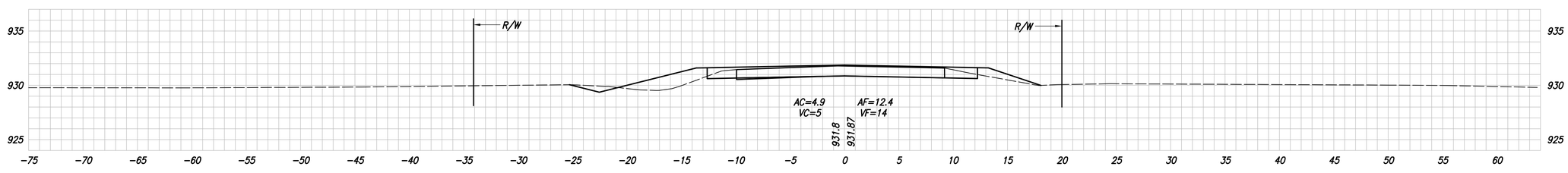

DESIGNED: PRA	DRAWN: DWB	HAMILTON COUNTY BRIDGE NO. 282	HORIZONTAL SCALE 1" = 5' / BRIDGE FILE HAMILTON 282 / VERTICAL SCALE 1" = 5' / DESIGNATION
CHECKED: MJH	CHECKED: PRA	CROSS SECTIONS LINE "A"	SURVEY BOOK / SHEETS 22 of 24 / CONTRACT / PROJECT PB-09-0015

50+75

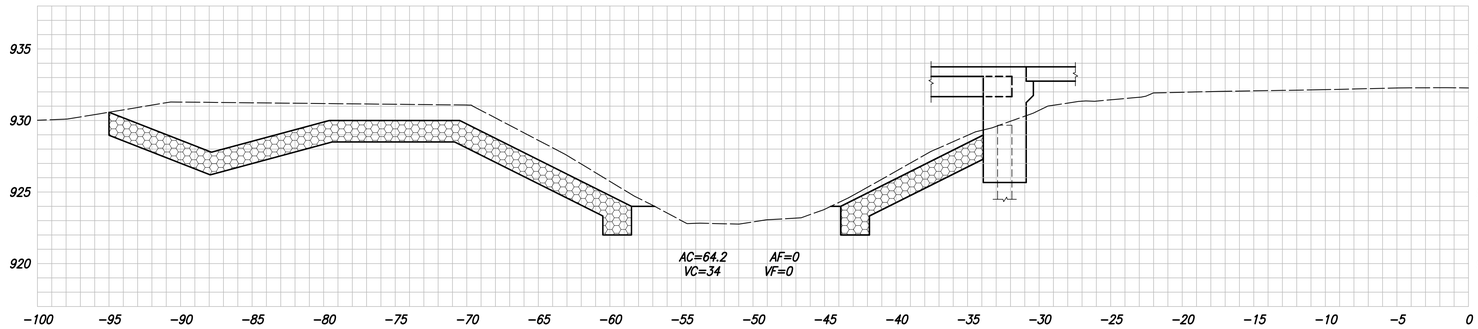

50+50

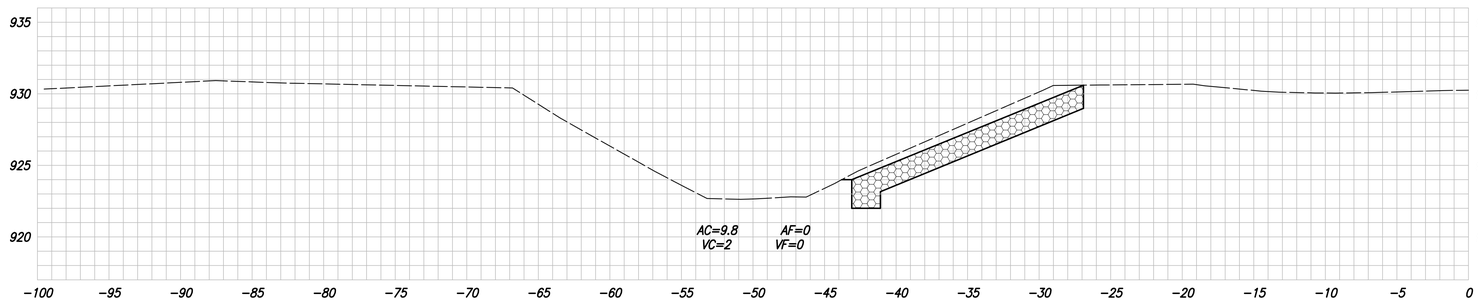

50+40

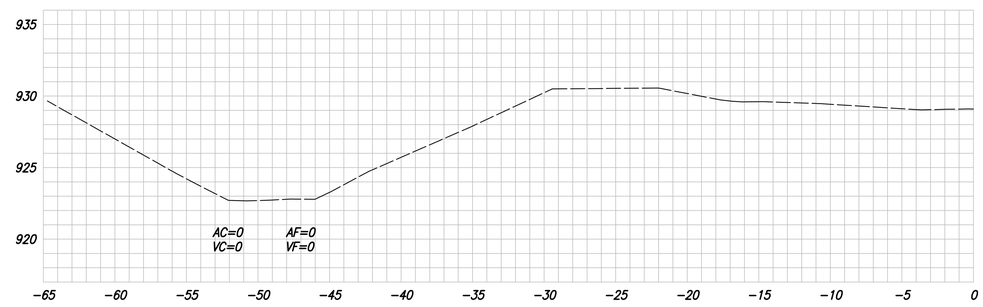

		HAMILTON COUNTY BRIDGE NO. 282	HORIZONTAL SCALE: 1" = 5' VERTICAL SCALE: 1" = 5' BRIDGE FILE: HAMILTON 282 DESIGNATION:
	DESIGNED: PRA CHECKED: MJH	DRAWN: DWB CHECKED: PRA	CROSS SECTIONS LINE "BR"
			SURVEY BOOK SHEETS: 23 of 24 CONTRACT PROJECT: PB-09-0015

STA. 51+60 "A"
AC=0 AF=0
VC=6 VF=0

51+50

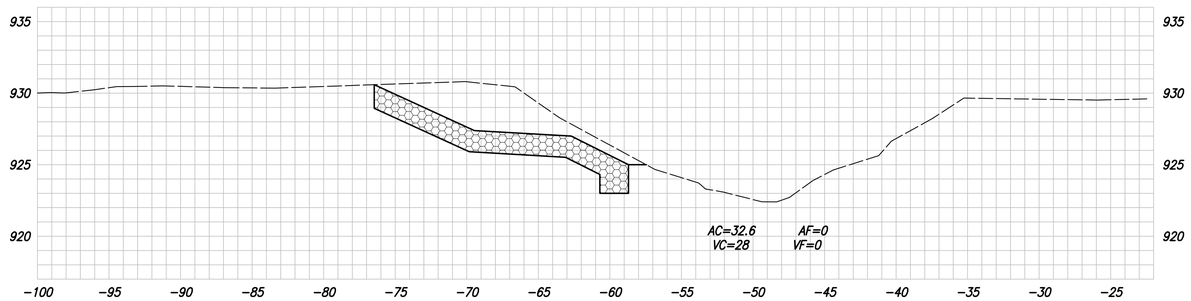

51+25

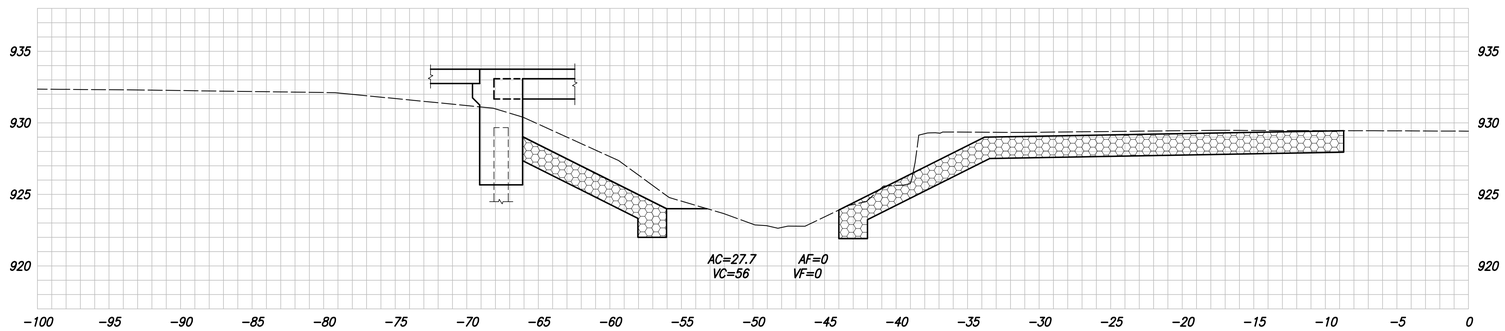

51+00

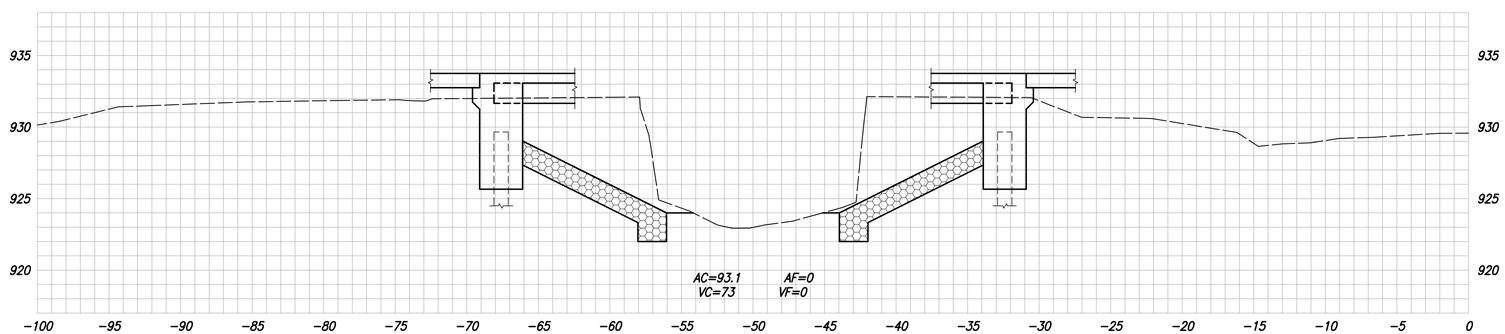

		HAMILTON COUNTY BRIDGE NO. 282	HORIZONTAL SCALE: 1" = 5' VERTICAL SCALE: 1" = 5' BRIDGE FILE: HAMILTON 282 DESIGNATION:
	DESIGNED: PRA CHECKED: MJH	DRAWN: DWB CHECKED: PRA	CROSS SECTIONS LINE "BR"	SURVEY BOOK: CONTRACT: SHEETS: 24 of 24 PROJECT: PB-09-0015