HAMILTON COUNTY
BRIDGE NO. 207 PLANS
LOGAN STREET OVER
WHITE RIVER

INDEX	
SHEET NO.	DESIGNATION
1	TITLE SHEET
2-6	TRAFFIC MAINTENANCE DETAILS - PHASES I, II & III
6A	DETOUR ROUTE
7-8	WATERWAY TRAFFIC MAINTENANCE
9	APPROACH DETAILS
10-12	SOIL BORINGS
13	BRIDGE LAYOUT
14-18	GENERAL PLAN
19-20	EXISTING END BENTS
25-26	PROPOSED END BENTS
29-31	PIERS
32	FRAMING PLAN
33-37	STRUCTURAL STEEL
39-42	FLOOR DETAILS
43-45	APPROACH SLAB
46-52	WALLS, STAIRS & RAILINGS
53	BRIDGE SUMMARY
54	ROAD SUMMARY
	BRIDGE LIGHTING SHEETS
E001	ELECTRICAL SYMBOLS AND NOTES
E100	BRIDGE LIGHTING DEMOLITION PLAN
E200	BRIDGE LIGHTING PLAN
E300	ELECTRICAL SCHEDULES
E400	ELECTRICAL DETAILS

TRAFFIC / DESIGN DATA	
A.A.D.T. (2011)	10,845V.P.D.
DIRECTIONAL DISTRIBUTION	50 %
TRUCKS	10 % A.A.D.T.
DESIGN SPEED	30 MPH
RURAL/URBAN	URBAN
ACCESS CONTROL	NONE

BRIDGE LENGTH	=	0.058 MILES
ROADWAY LENGTH	=	0.019 MILES
PROJECT LENGTH	=	0.077 MILES
MAX. GRADE	=	1.60 %

Note: Existing Structure and Elevations shown on these Plans are 0.59' Lower then the corresponding elevations on the Original Plans due to vertical Datum correction.

APPROVED: DATE 03·26·18

BOARD OF HAMILTON COUNTY COMMISSIONERS

MARK HEIRBRANDT, PRESIDENT

STEVEN C. DILLINGER, MEMBER

CHRISTINE ALTMAN, MEMBER

ATTEST:

ROBIN M. MILLS, AUDITOR

JOEL THURMAN, P.E., ACTING COUNTY ENGINEER

REHABILITATION AND WIDENING OF BRIDGE 207, LOGAN STREET OVER WHITE RIVER
LOCATED IN SECTION 36, T19N, R4E, HAMILTON COUNTY INDIANA

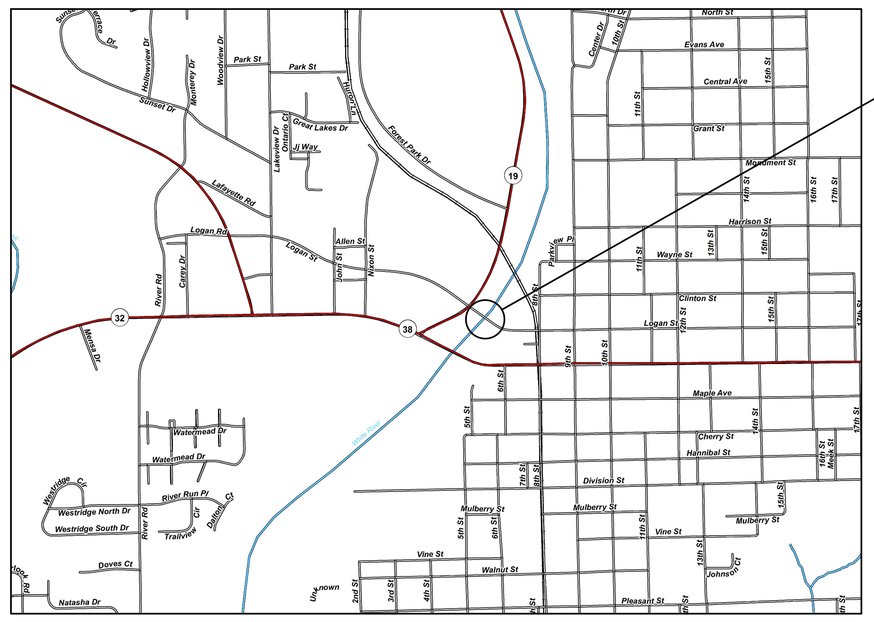

SCALE: NONE

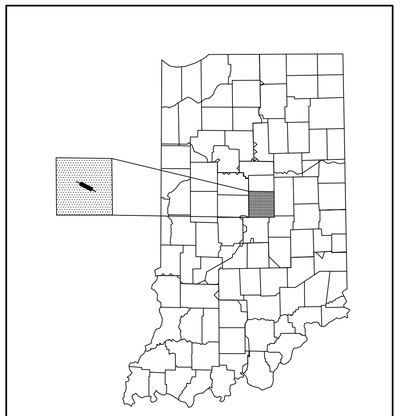

PROJECT LOCATION SHOWN BY
HAMILTON COUNTY

Lat: 40°02'49"
Long: 86°00'60"

VICINITY MAP
HAMILTON COUNTY

UTILITIES

DUKE ENERGY
Gabe Gibson
2515 North Morton St.
Franklin, In. 46131
317-736-2047
gabe.gibson@duke-energy.com

CITY OF NOBLESVILLE
Andrew Rodewald
16 South 10th St., Suite 155
Noblesville, Indiana 46060
317-776-6330
arodewald@noblesville.in.us

USGS
Paul Baker
317-600-2781
prbaker@usgs.gov

ZAYO BANDWIDTH
Waylon Higgins
9209 Castlegate Drive
Indianapolis, Indiana 46256
765-341-1199
waylon.higgins@zayo.com

INDIANA AMERICAN WATER
Mike Seals
555 East County Line Road, Suite 201
Greenwood, In. 46143
317-885-2444
michael.seals@amwater.com

CenturyLink (Level 3 Communications)
Xan Rypkema
1025 Eldorado Blvd.
Broomfield CO. 80021
xan.rypkema@centurylink.com

LIGHTOWER (FIBERTECH)
James Highsmith
300 Meridian Center
Rochester, New York 14618
585-697-5145
jhighsmith@loghtower.com

INDOT GREENFIELD DISTRICT
Larry Starkey
845 West Main ST.
Hancock County, Greenfield, IN. 46140
317-467-3423
lstarkey@indot.in.gov

INDIANA DEPARTMENT OF TRANSPORTATION STANDARD SPECIFICATIONS DATED 2018 TO BE USED WITH THESE PLANS.

FULL SIZE PLANS HAVE BEEN PREPARED USING STANDARD ENGINEERING SCALES. REDUCED SIZED PLANS WILL NOT CONFORM TO STANDARD SCALES.

TITLE AND INDEX

BRYAN WRIGHT REGISTERED No. PE11100630 STATE OF INDIANA PROFESSIONAL ENGINEER

RECOMMENDED FOR APPROVAL: 4/24/2018
DESIGN ENGINEER DATE

DESIGNED: B. WRIGHT DRAWN: D. SHEETZ
CHECKED: D. SHEETZ CHECKED: B. WRIGHT

BRIDGE NO.207
OVER WHITE RIVER
HAMILTON COUNTY

Headquarters
8450 WESTFIELD BLVD., SUITE 300
INDIANAPOLIS, IN. 46240-8302
TEL 317-713-4615
FAX 317-713-4616
www.BFSEngr.com

Butler Fairman Seufert CIVIL ENGINEERS

Branch Locations
FORT WAYNE 260-459-1532
LOUISVILLE 502-593-1996
LAFAYETTE 765-423-5602
MERRILLVILLE 219-769-2333
PLAINFIELD 317-839-3242

HORIZONTAL SCALE	BRIDGE FILE
AS NOTED	HAMILTON 207
VERTICAL SCALE	DESIGNATION
AS NOTED	N/A
SURVEY BOOK	SHEET
ELECTRONIC	1 OF 59
CONTRACT	PROJECT
N/A	PB-18-0001

BFS NO. 6063

H:\606300.0000\ProDevelopment\Design\Drawings\606300101.dwg Donald Sheetz Plot:6/25/2018 1:34 PM Save:6/19/2018 6:56 AM

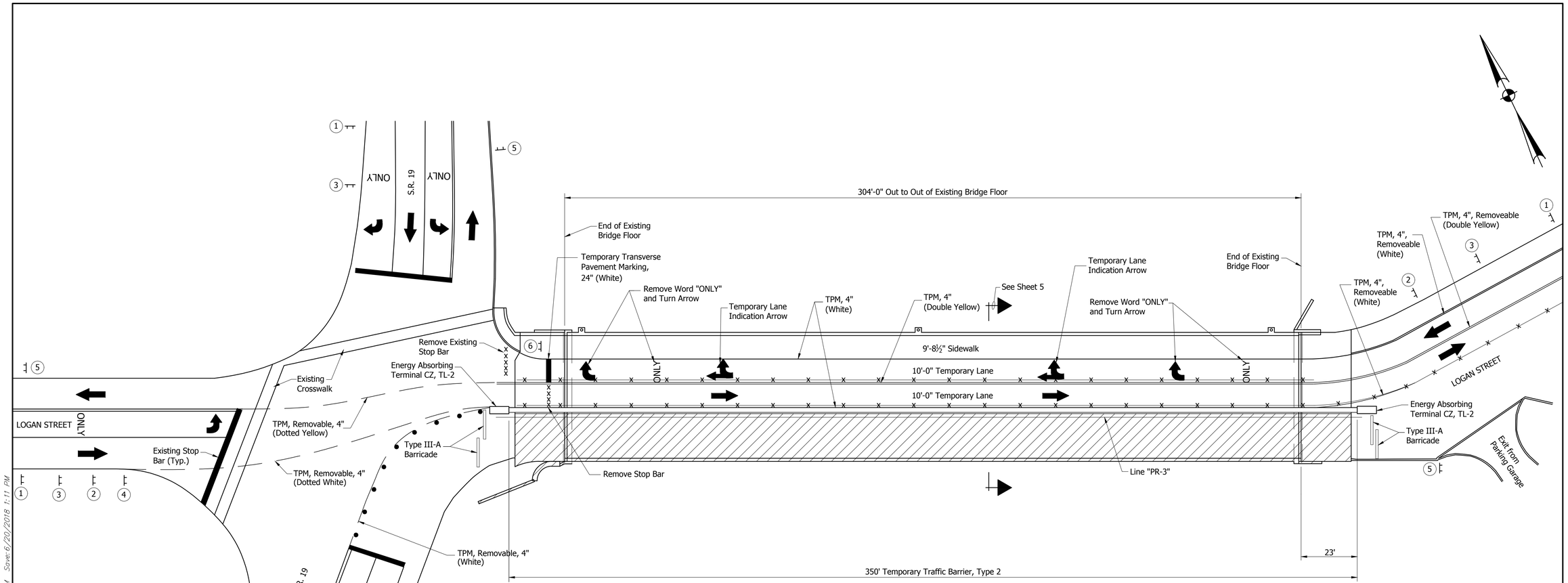

PHASE I-CONSTRUCTION

Scale: 1"=20'-0"

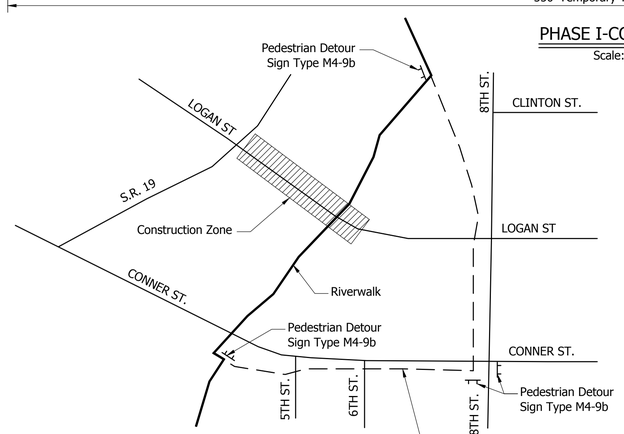

RIVERWALK DETOUR

Scale: None

LEGEND

1. XW20-1 Road Construction Ahead
2. XG20-5 Lane Closure Notice Sign
3. XW2-6-A Speeding/Reckless Driving Sign
4. XW1-4-A (L) Reverse Curve Sign
5. XG20-2 End Construction
6. R10-11 No Turn on Red
7. R3-1 No Right Turn (Trucks)

X—X Line Removal

TPM=Temporary Pavement Marking (Color and Width as Noted)

• Indicates Drum with Type "C" Steady Burning Light (Not a Pay Item)

Construction Area

NOTES

Signs shall be placed as shown on the Plans or as directed by the Engineer.

All Construction Signs to have Low Intensity Flashing Yellow Light, Type A.

See special provisions for MOT coordination East of the project site

TRAFFIC MAINTENANCE DETAILS

BRYAN WRIGHT REGISTERED No. PE11100630 STATE OF INDIANA PROFESSIONAL ENGINEER

RECOMMENDED FOR APPROVAL: 4/24/2018
DESIGN ENGINEER DATE

DESIGNED: D. SHEETZ DRAWN: D. SHEETZ
CHECKED: B. WRIGHT CHECKED: B. WRIGHT

BRIDGE NO.207
OVER WHITE RIVER
HAMILTON COUNTY

Headquarters
8450 WESTFIELD BLVD., SUITE 300
INDIANAPOLIS, IN. 46240-8302
TEL 317-713-4615
FAX 317-713-4616
www.BFSEngr.com

BF&S Butler Fairman & Seufert CIVIL ENGINEERS

Branch Locations
FORT WAYNE 260-459-1532
LOUISVILLE 502-593-1996
LAFAYETTE 765-423-5602
MERRILLVILLE 219-769-2333
PLAINFIELD 317-839-3242

HORIZONTAL SCALE	BRIDGE FILE
AS NOTED	HAMILTON 207
VERTICAL SCALE	DESIGNATION
AS NOTED	
SURVEY BOOK	SHEET
ELECTRONIC	2 OF 59
CONTRACT	PROJECT
	PB-18-0001

BFS NO. 6063

H:\606300.0000\ProjDevelopment\Design\Drawings\606383310.dwg Donald Sheetz Plot:6/25/2018 1:34 PM Saved:6/20/2018 1:11 PM

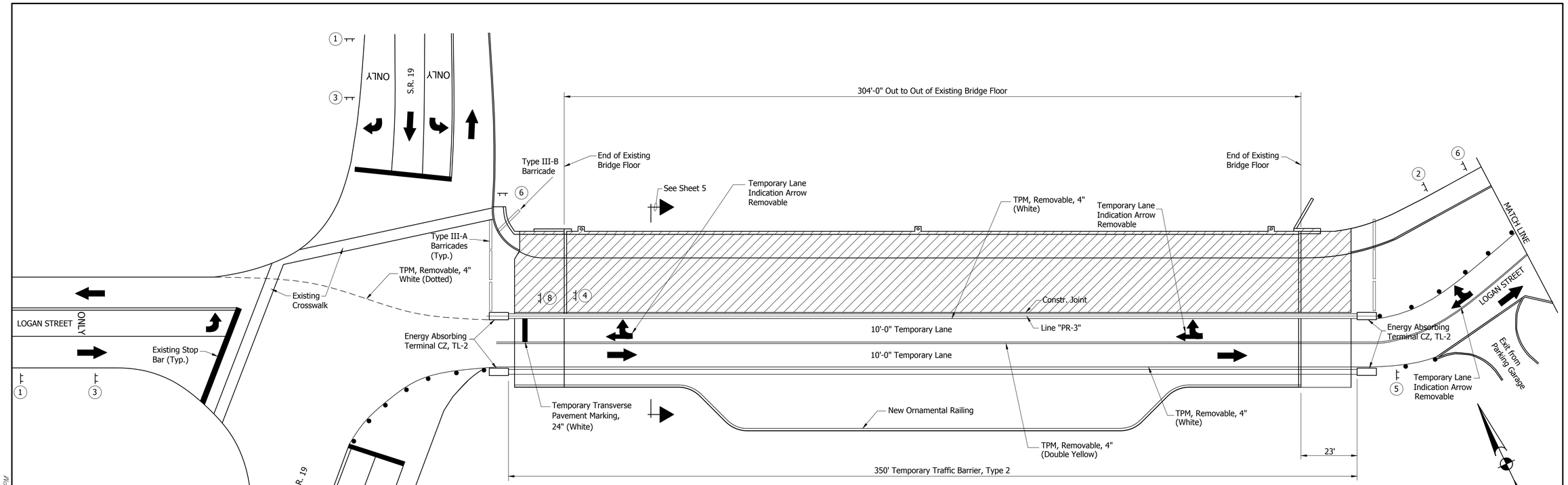

PHASE II-CONSTRUCTION

Scale: 1"=20'-0"

Note: Place one R9-9 Sidewalk Closed Sign beyond Judicial Center.

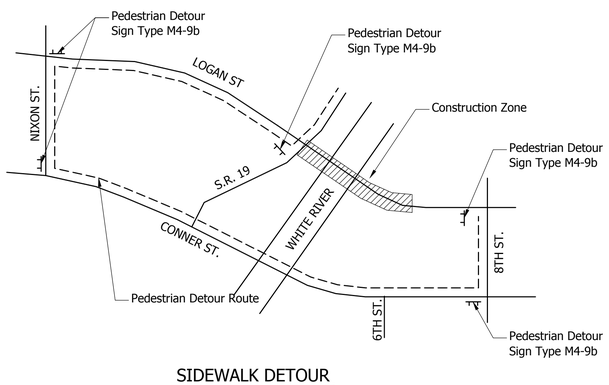

SIDEWALK DETOUR

Scale: None

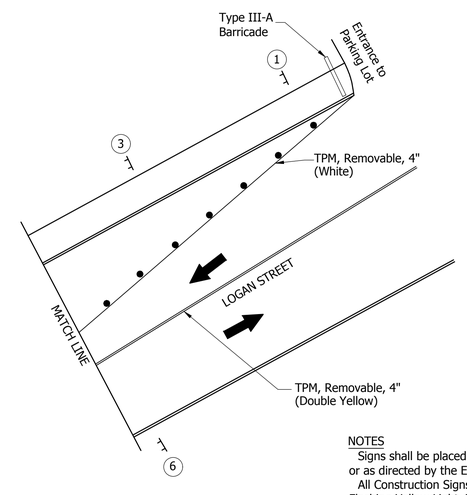

LEGEND

1. XW20-1 Road Construction Ahead
2. XG20-5 Lane Closure Notice Sign
3. XW2-6-A Speeding/Reckless Driving Sign
4. XW1-4-A (R) Reverse Curve Sign
5. XG20-2 End Construction
6. R9-9 Sidewalk Closed
7. R3-1 No Right Turn (Trucks)
8. R10-11 No Turn on Red

X—X Line Removal

TPM=Temporary Pavement Marking (Color and Width as Noted)

• Indicates Drum with Type "C" Steady Burning Light (Not a Pay Item)

Construction Area

NOTES

Signs shall be placed as shown on the Plans or as directed by the Engineer.

All Construction Signs to have Low Intensity Flashing Yellow Light, Type A.

TRAFFIC MAINTENANCE DETAILS

BRYAN WRIGHT REGISTERED No. PE11100630 STATE OF INDIANA PROFESSIONAL ENGINEER

RECOMMENDED FOR APPROVAL: DESIGN ENGINEER 4/24/2018 DATE

DESIGNED: D. SHEETZ DRAWN: D. SHEETZ

CHECKED: B. WRIGHT CHECKED: B. WRIGHT

BRIDGE NO.207
OVER WHITE RIVER
HAMILTON COUNTY

Headquarters
8450 WESTFIELD BLVD., SUITE 300
INDIANAPOLIS, IN. 46240-8302
TEL 317-713-4615
FAX 317-713-4616
www.BFSEngr.com

Branch Locations
FORT WAYNE 260-459-1532
LOUISVILLE 502-593-1996
LAFAYETTE 765-423-5602
MERRILLVILLE 219-769-2333
PLAINFIELD 317-839-3242

BFS Butler Fairman & Seufert CIVIL ENGINEERS

HORIZONTAL SCALE	BRIDGE FILE
AS NOTED	HAMILTON 207
VERTICAL SCALE	DESIGNATION
AS NOTED	
SURVEY BOOK	SHEET
ELECTRONIC	3 OF 59
CONTRACT	PROJECT
	PB-18-0001

6063

BFS NO.

H:\606300.0000\Pro_Development\Design\Drawings\606-3311.dwg Donald Sheetz Plot:6/25/2018 1:35 PM Save:6/20/2018 1:15 PM

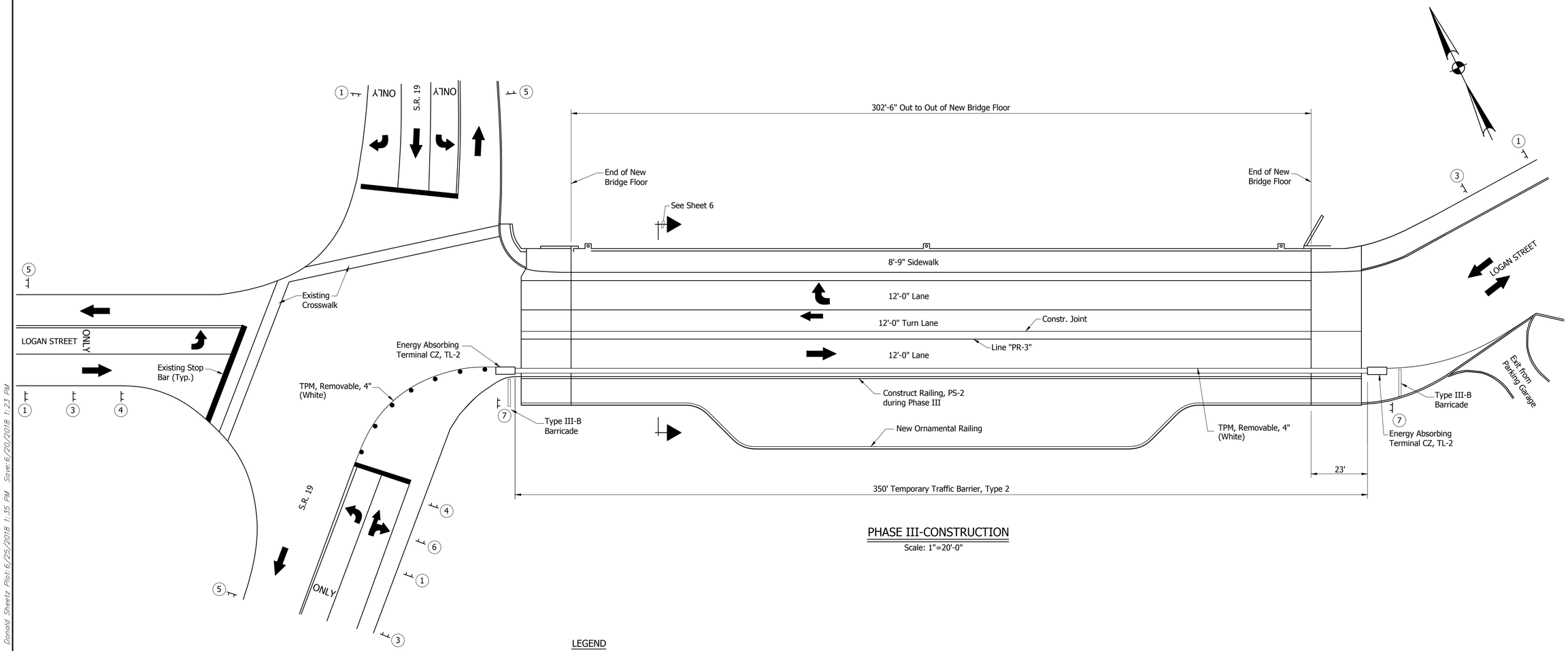

PHASE III-CONSTRUCTION

Scale: 1"=20'-0"

LEGEND

1. XW20-1 Road Construction Ahead
2. XG20-3 Road Closed Ahead
3. XW2-6-A Speeding/Reckless Driving Sign
4. XW21-5 Shoulder Closed Ahead
5. XG20-2 End Construction
6. R3-1 No Right Turn (Trucks)
7. R9-9 Sidewalk Closed

Construction Area

NOTES

Signs shall be placed as shown on the Plans or as directed by the Engineer.

All Construction Signs to have Low Intensity Flashing Yellow Light, Type A.

TRAFFIC MAINTENANCE DETAILS

BRYAN WRIGHT REGISTERED No. PE11100630 STATE OF INDIANA PROFESSIONAL ENGINEER

RECOMMENDED FOR APPROVAL: 4/24/2018
DESIGN ENGINEER DATE

DESIGNED: D. SHEETZ DRAWN: D. SHEETZ
CHECKED: B. WRIGHT CHECKED: B. WRIGHT

BRIDGE NO.207
OVER WHITE RIVER
HAMILTON COUNTY

Headquarters
8450 WESTFIELD BLVD., SUITE 300
INDIANAPOLIS, IN. 46240-8302
TEL 317-713-4615
FAX 317-713-4616
www.BFSEngr.com

BF&S Butler Fairman & Seufert CIVIL ENGINEERS

Branch Locations
FORT WAYNE 260-459-1532
LOUISVILLE 502-593-1996
LAFAYETTE 765-423-5602
MERRILLVILLE 219-769-2333
PLAINFIELD 317-839-3242

HORIZONTAL SCALE	BRIDGE FILE
AS NOTED	HAMILTON 207
VERTICAL SCALE	DESIGNATION
AS NOTED	
SURVEY BOOK	SHEET
ELECTRONIC	4 OF 59
CONTRACT	PROJECT
	PB-18-0001

BRS NO. 6369

H:\606300.0000\Pro Development\Design\Drawings\606383712.dwg Donald Sheetz Plot:6/25/2018 1:35 PM Save:6/20/2018 1:23 PM

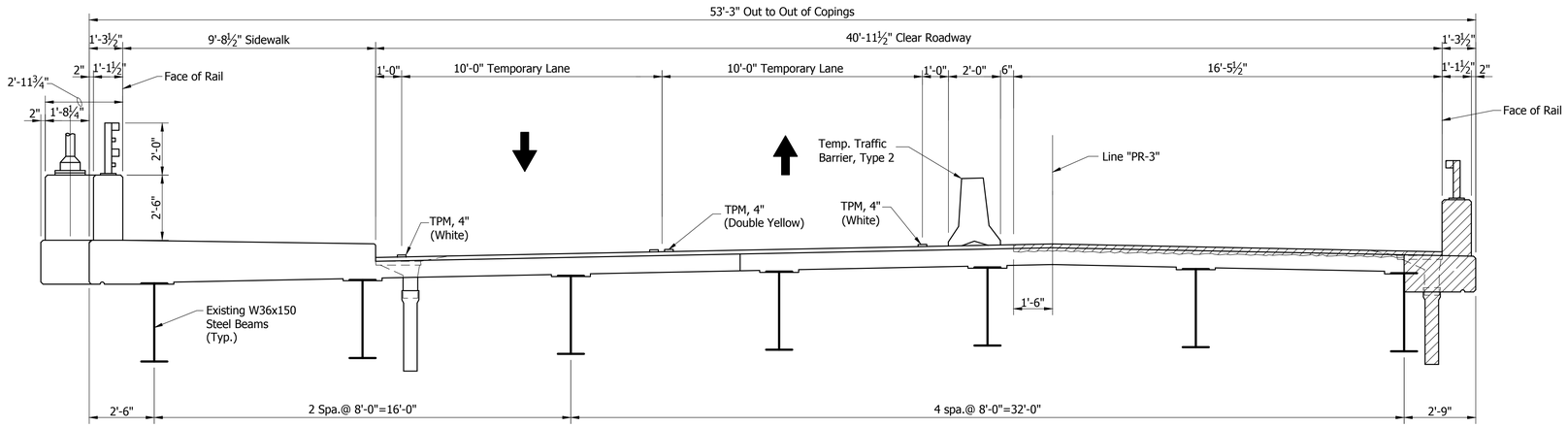

PHASE I

Scale: ⅜"=1'-0"

Note: Hatched Areas indicate Portions to be Removed

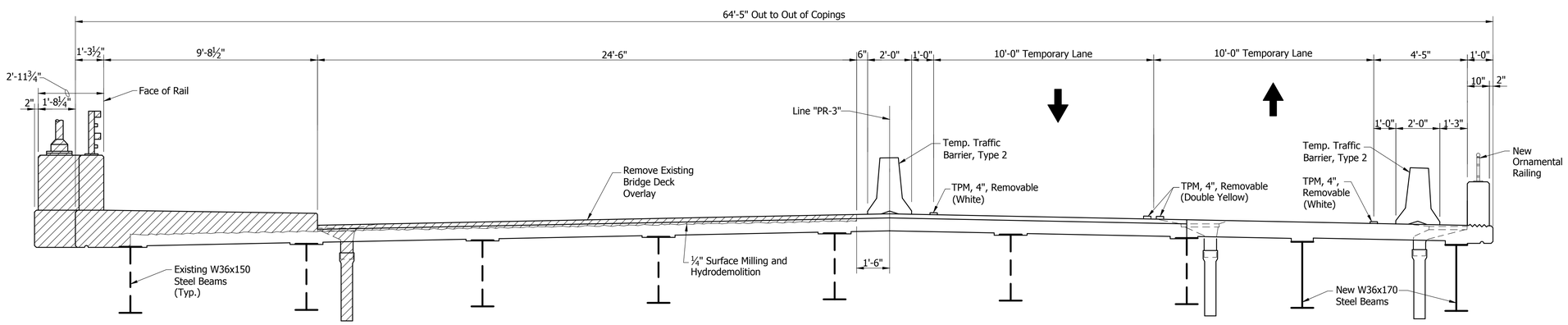

PHASE II

Scale: ⅜"=1'-0"

TRAFFIC MAINTENANCE DETAILS

BRYAN WRIGHT
REGISTERED
No. PE11100630
STATE OF INDIANA
PROFESSIONAL ENGINEER

RECOMMENDED FOR APPROVAL: _____ DESIGN ENGINEER 4/24/2018 DATE

DESIGNED: B. WRIGHT DRAWN: D. SHEETZ

CHECKED: D. SHEETZ CHECKED: B. WRIGHT

BRIDGE NO.207
OVER WHITE RIVER
HAMILTON COUNTY

Headquarters
8450 WESTFIELD BLVD., SUITE 300
INDIANAPOLIS, IN. 46240-8302
TEL 317-713-4615
FAX 317-713-4616
www.BFSEngr.com

BF&S Butler Fairman & Seufert CIVIL ENGINEERS

Branch Locations
FORT WAYNE 260-459-1532
LOUISVILLE 502-593-1996
LAFAYETTE 765-423-5602
MERRILLVILLE 219-769-2333
PLAINFIELD 317-839-3242

HORIZONTAL SCALE	BRIDGE FILE
AS NOTED	HAMILTON 207
VERTICAL SCALE	DESIGNATION
AS NOTED	
SURVEY BOOK	SHEET
ELECTRONIC	5 OF 59
CONTRACT	PROJECT
	PB-18-0001

BFS NO. 6063

H:\606300.0000\ProDevelopment\Design\Drawings\606303T14.dwg Donald Sheetz Plot:6/25/2018 1:35 PM Save:4/19/2018 9:40 AM

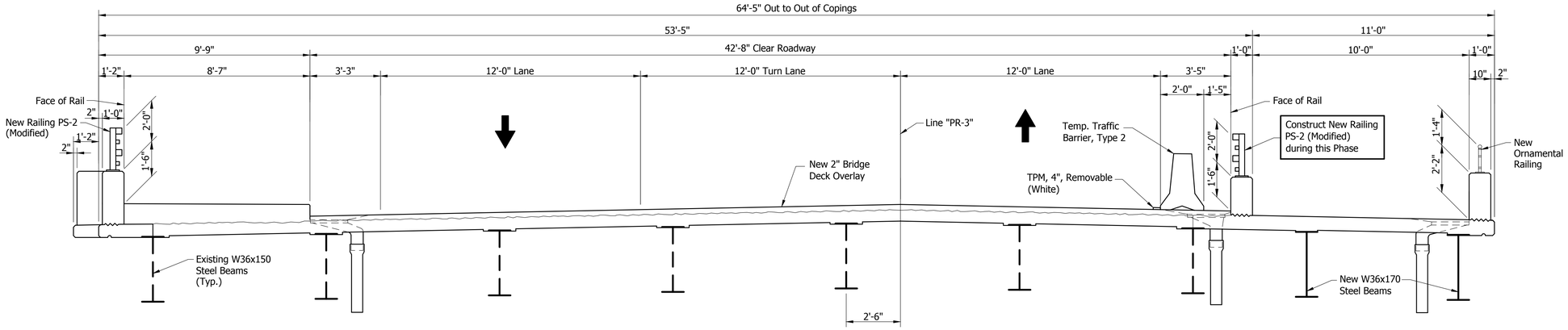

PHASE III

Scale: ⅜"=1'-0"

TRAFFIC MAINTENANCE DETAILS

BRYAN WRIGHT
REGISTERED
No.
PE11100630
STATE OF
INDIANA
PROFESSIONAL ENGINEER

RECOMMENDED FOR APPROVAL: 4/24/2018
DESIGN ENGINEER DATE

DESIGNED: B. WRIGHT DRAWN: D. SHEETZ
CHECKED: D. SHEETZ CHECKED: B. WRIGHT

BRIDGE NO.207
OVER WHITE RIVER
HAMILTON COUNTY

Headquarters
8450 WESTFIELD BLVD., SUITE 300
INDIANAPOLIS, IN. 46240-8302
TEL 317-713-4615
FAX 317-713-4616
www.BFSEngr.com

BF&S
Butler Fairman & Seufert
CIVIL ENGINEERS

Branch Locations
FORT WAYNE 260-459-1532
LOUISVILLE 502-593-1996
LAFAYETTE 765-423-5602
MERRILLVILLE 219-769-2333
PLAINFIELD 317-839-3242

HORIZONTAL SCALE	BRIDGE FILE
AS NOTED	HAMILTON 207
VERTICAL SCALE	DESIGNATION
AS NOTED	

SURVEY BOOK	SHEET		
ELECTRONIC	6	OF	59
CONTRACT	PROJECT		
	PB-18-0001		

BFS NO. 6063

H:\606300.0000\ProjDevelopment\Design\Drawings\606383144.dwg Donald Sheetz Plot:6/25/2018 1:35 PM Saved:6/11/2018 6:19 AM

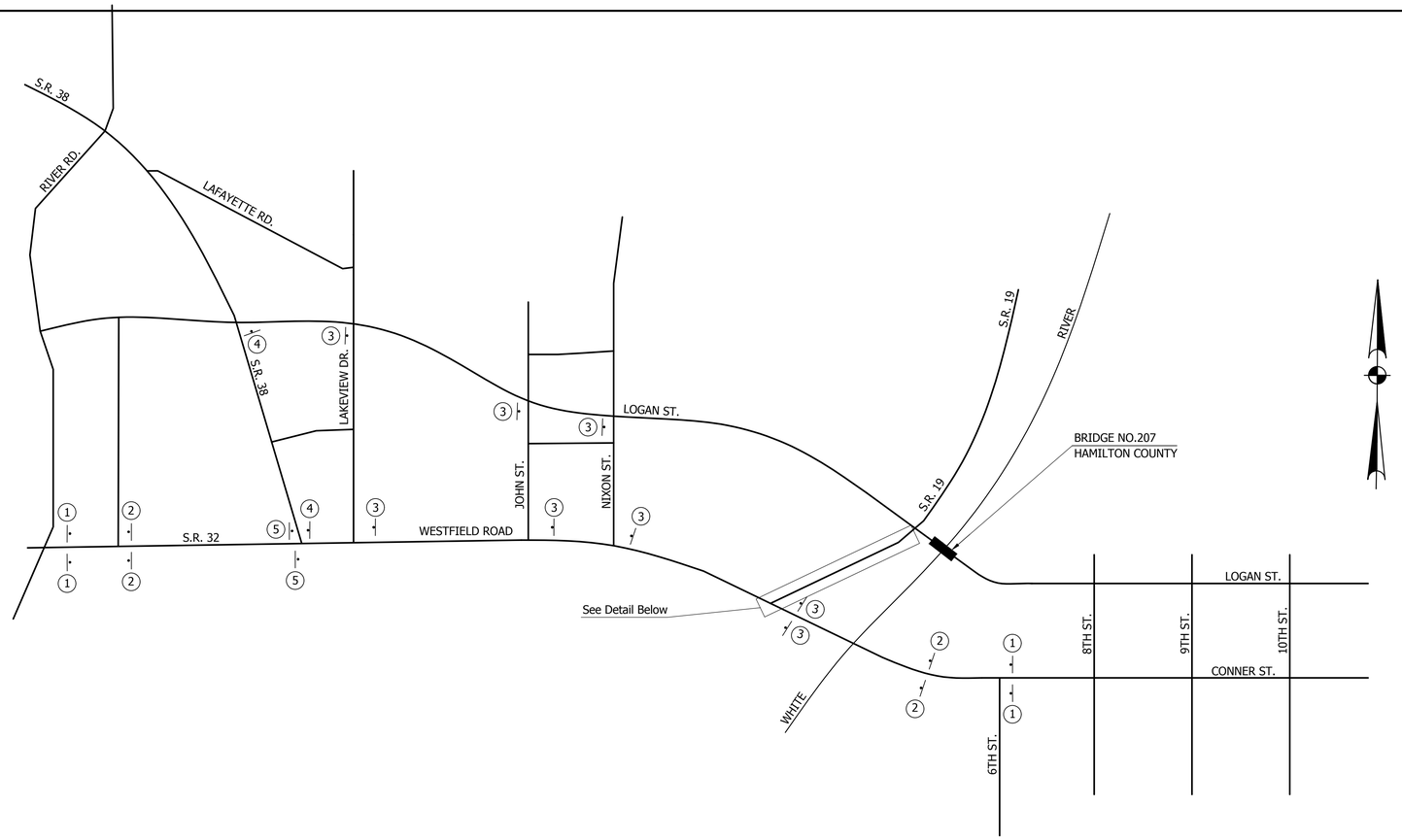

SIGN LEGEND				
SYMBOL	MESSAGE	NUMBER	TYPE	REQ'D.
1	ROAD CLOSED AHEAD (S.R. 19 NORTH)	XW20-3	A	4
2	DETOUR AHEAD	XW20-2	A	4
3	DETOUR ROUTE MARKER ASSEMBLY (CONFIRMING)			8
4	DETOUR ROUTE MARKER ASSEMBLY (RIGHT)			2
5	DETOUR ROUTE MARKER ASSEMBLY (LEFT) (S.R. 19 NORTH)	XM4-9e	A	2
6	STANDARD BARRICADE (TYPE III-A) (12'-0" SECTION) ⊛			8
	ROAD CLOSURE SIGN ASSEMBLY (R11-2)			2
7	NO LEFT TURN	R3-2	A	1

⊛ Total Quantity = 96'-0"

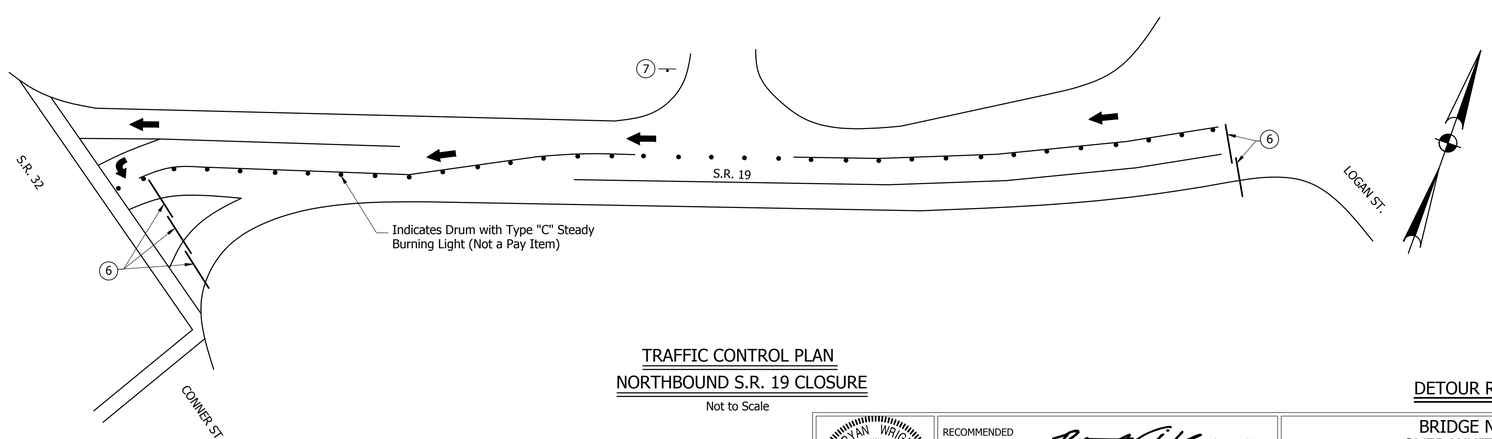

TRAFFIC CONTROL PLAN
NORTHBOUND S.R. 19 CLOSURE

Not to Scale

DETOUR ROUTE

BRYAN WRIGHT REGISTERED No. PE11100630 STATE OF INDIANA PROFESSIONAL ENGINEER

RECOMMENDED FOR APPROVAL: DESIGN ENGINEER 4/24/2018 DATE

DESIGNED: B. WRIGHT DRAWN: D. SHEETZ
CHECKED: D. SHEETZ CHECKED: B. WRIGHT

BRIDGE NO.207
OVER WHITE RIVER
HAMILTON COUNTY

Headquarters
8450 WESTFIELD BLVD., SUITE 300
INDIANAPOLIS, IN. 46240-8302
TEL 317-713-4615
FAX 317-713-4616
www.BFSEngr.com

Butler Fairman & Seufert CIVIL ENGINEERS

Branch Locations
FORT WAYNE 260-459-1532
LOUISVILLE 502-593-1996
LAFAYETTE 765-423-5602
MERRILLVILLE 219-769-2333
PLAINFIELD 317-839-3242

HORIZONTAL SCALE	BRIDGE FILE
AS NOTED	HAMILTON 207
VERTICAL SCALE	DESIGNATION
AS NOTED	

SURVEY BOOK	SHEET
ELECTRONIC	6A OF 59
CONTRACT	PROJECT
	PB-18-0001

6369

BF SN

H:\606300.0000\Pro Development\Design\Drawings\606383148.dwg Donald Sheetz Plot:6/25/2018 1:35 PM Saved:6/18/2018 7:36 AM

SIGN DETAIL

Panel Style: construction_guide.ssi
M.U.T.C.D.: 2009 Edition

Panel Style: construction_guide.ssi
Dimensions are in inches.tenths
Letter locations are panel edge to lower left corner

SIGN NUMBER	name
WIDTH x HGHT.	4'-6" x 2'-6"
BORDER WIDTH	0.63"
CORNER RADIUS	1.5"
MOUNTING	Ground
BACKGROUND	TYPE: Reflective
	COLOR: Orange
LEGEND/BORDER	TYPE: Reflective
	COLOR: Black/Black

SYMBOL	ROT	X	Y	WID	HT

LETTER POSITIONS (X)																				LENGTH	SERIES/SIZE
C	A	U	T	I	O	N		I	N	–	C	H	A	N	N	E	L				C 2000
3	5.7	8.8	11.6	14.2	15.6	18.7	21	25	26.4	29.2	31.1	34.1	36.9	40	43.2	46.3	49			48.1	4
R	E	S	T	R	I	C	T	I	O	N	S		A	N	D						C 2000
5.8	8.7	11.2	13.8	16.4	19.4	20.7	23.4	26	27.4	30.6	33.5	35.7	39.7	42.8	46					42.4	4
O	V	E	R	H	E	A	D														C 2000
15.8	18.6	21.7	24.4	27.3	30.4	32.8	36													22.4	4
W	O	R	K		A	H	E	A	D												C 2000
12.1	15.6	18.8	21.7	23.9	27.9	31	34.2	36.6	39.7											29.8	4

TYPE "3" SIGN

Not to Scale

SIGN DETAIL
1:20

Panel Style: construction_guide.ssi
M.U.T.C.D.: 2009 Edition

Panel Style: construction_guide.ssi
Dimensions are in inches.tenths
Letter locations are panel edge to lower left corner

SIGN NUMBER	name
WIDTH x HGHT.	4'-0" x 2'-0"
BORDER WIDTH	0.63"
CORNER RADIUS	1.5"
MOUNTING	Ground
BACKGROUND	TYPE: Reflective
	COLOR: Orange
LEGEND/BORDER	TYPE: Reflective
	COLOR: Black/Black

SYMBOL	ROT	X	Y	WID	HT

LETTER POSITIONS (X)																				LENGTH	SERIES/SIZE
D	A	N	G	E	R																C 2000
11.3	15.4	20.1	24.7	29.2	33.3															25.3	6
F	A	L	L	I	N	G		D	E	B	R	I	S								C 2000
5.8	8.1	11.2	13.8	16.4	17.8	20.9	23.1	27.1	30.2	32.9	35.8	38.7	40							36.4	4
O	V	E	R	H	E	A	D														C 2000
12.8	15.6	18.7	21.4	24.3	27.4	29.8	33													22.4	4

TYPE "4" SIGN

Not to Scale

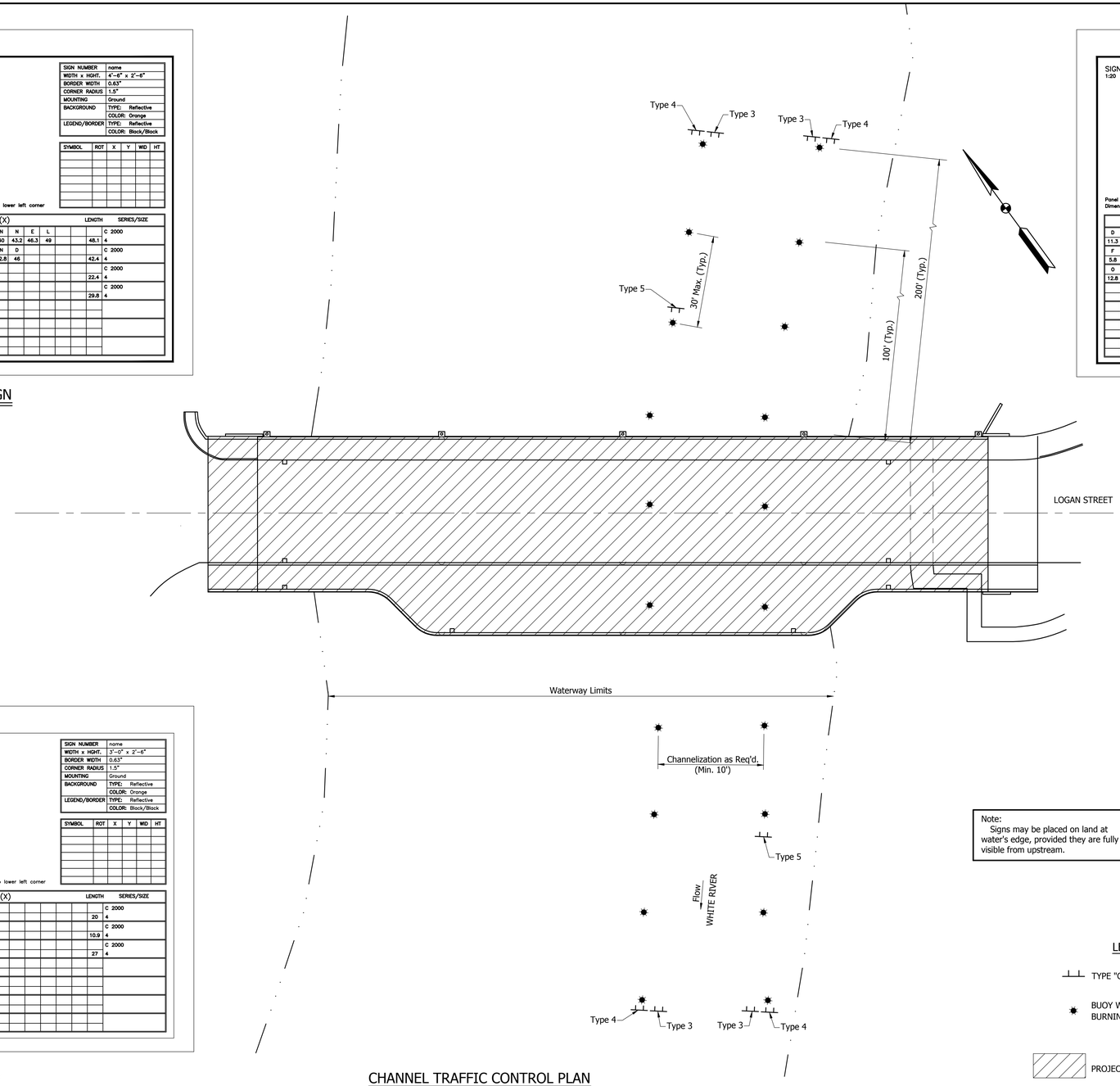

CHANNEL TRAFFIC CONTROL PLAN

Not to Scale

SIGN DETAIL

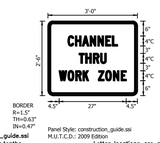

Panel Style: construction_guide.ssi
M.U.T.C.D.: 2009 Edition

Panel Style: construction_guide.ssi
Dimensions are in inches.tenths
Letter locations are panel edge to lower left corner

SIGN NUMBER	name
WIDTH x HGHT.	3'-0" x 2'-6"
BORDER WIDTH	0.63"
CORNER RADIUS	1.5"
MOUNTING	Ground
BACKGROUND	TYPE: Reflective
	COLOR: Orange
LEGEND/BORDER	TYPE: Reflective
	COLOR: Black/Black

SYMBOL	ROT	X	Y	WID	HT

LETTER POSITIONS (X)																				LENGTH	SERIES/SIZE
C	H	A	N	E	L																C 2000
8	11.1	13.9	17	20.1	23.2	25.9														20	4
T	H	R	U																		C 2000
12.6	15.2	18.3	21.2																	10.9	4
W	O	R	K		Z	O	N	E													C 2000
4.5	8	11.2	14.1	16.3	20.3	23.2	26.3	29.5												27	4

TYPE "5" SIGN

Not to Scale

WATERWAY SIGN QUANTITIES

	SIGN TYPE	REQUIRED NUMBER
✳	3	4
⊛	4	4
⊛	5	2

✳ Paid for as a Construction Sign Type C
⊛ Paid for as a Construction Sign Type D

Note:
Signs may be placed on land at water's edge, provided they are fully visible from upstream.

LEGEND

TYPE "C", "D" or "E" SIGN

BUOY WITH TYPE "A" STEADY BURNING CONSTRUCTION WARNING LIGHT

PROJECT LOCATION

BRYAN WRIGHT
REGISTERED
No. PE11100630
STATE OF INDIANA
PROFESSIONAL ENGINEER

RECOMMENDED FOR APPROVAL: _____ DESIGN ENGINEER 4/24/2018 DATE

DESIGNED: C. O'BRIEN DRAWN: D. SHEETZ
CHECKED: B. WRIGHT CHECKED: B. WRIGHT

BRIDGE NO.207
OVER WHITE RIVER
HAMILTON COUNTY

Headquarters
8450 WESTFIELD BLVD., SUITE 300
INDIANAPOLIS, IN. 46240-8302
TEL 317-713-4615
FAX 317-713-4616
www.BFSEngr.com

Butler Fairman & Seufert CIVIL ENGINEERS

Branch Locations
FORT WAYNE 260-459-1532
LOUISVILLE 502-593-1996
LAFAYETTE 765-423-5602
MERRILLVILLE 219-769-2333
PLAINFIELD 317-839-3242

HORIZONTAL SCALE	BRIDGE FILE
1" = 20'-0"	HAMILTON 207
VERTICAL SCALE	DESIGNATION
1" = 10'-0"	

SURVEY BOOK	SHEET		
ELECTRONIC	7	OF	59
CONTRACT	PROJECT		
	PB-18-0001		

BFS NO. 6063

H:\606300.0000\ProDevelopment\Design\Drawings\606.30.15.dwg Donald Sheetz Plot:6/25/2018 1:35 PM Save:4/18/2018 8:15 AM

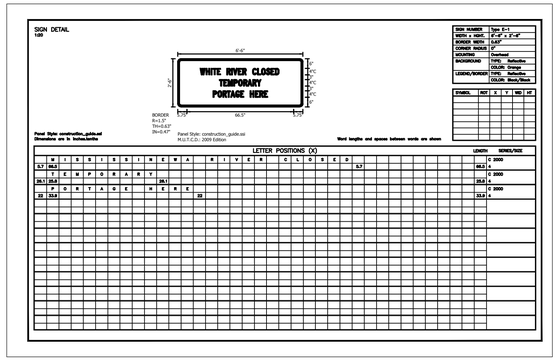

TYPE "1" SIGN

Not to Scale

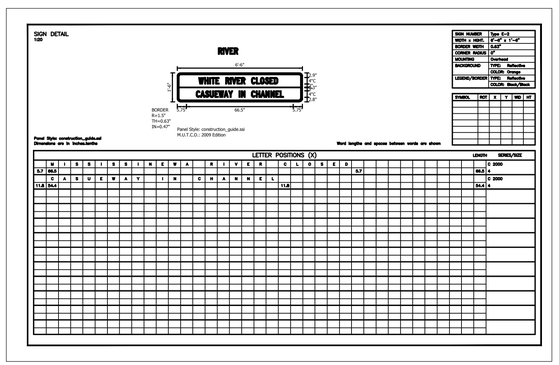

TYPE "2" SIGN

Not to Scale

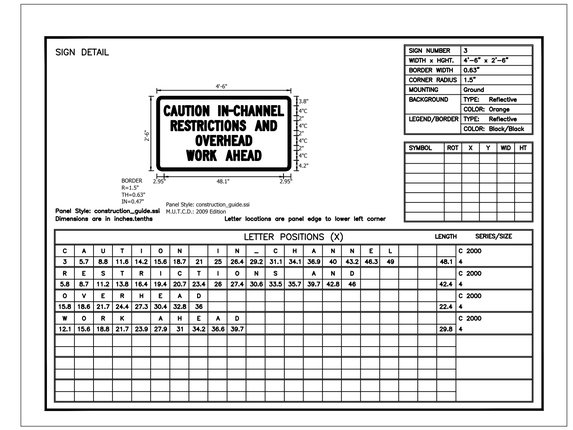

TYPE "3" SIGN

Not to Scale

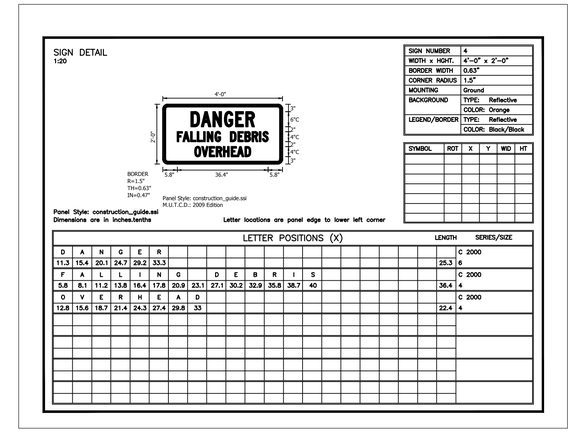

TYPE "4" SIGN

Not to Scale

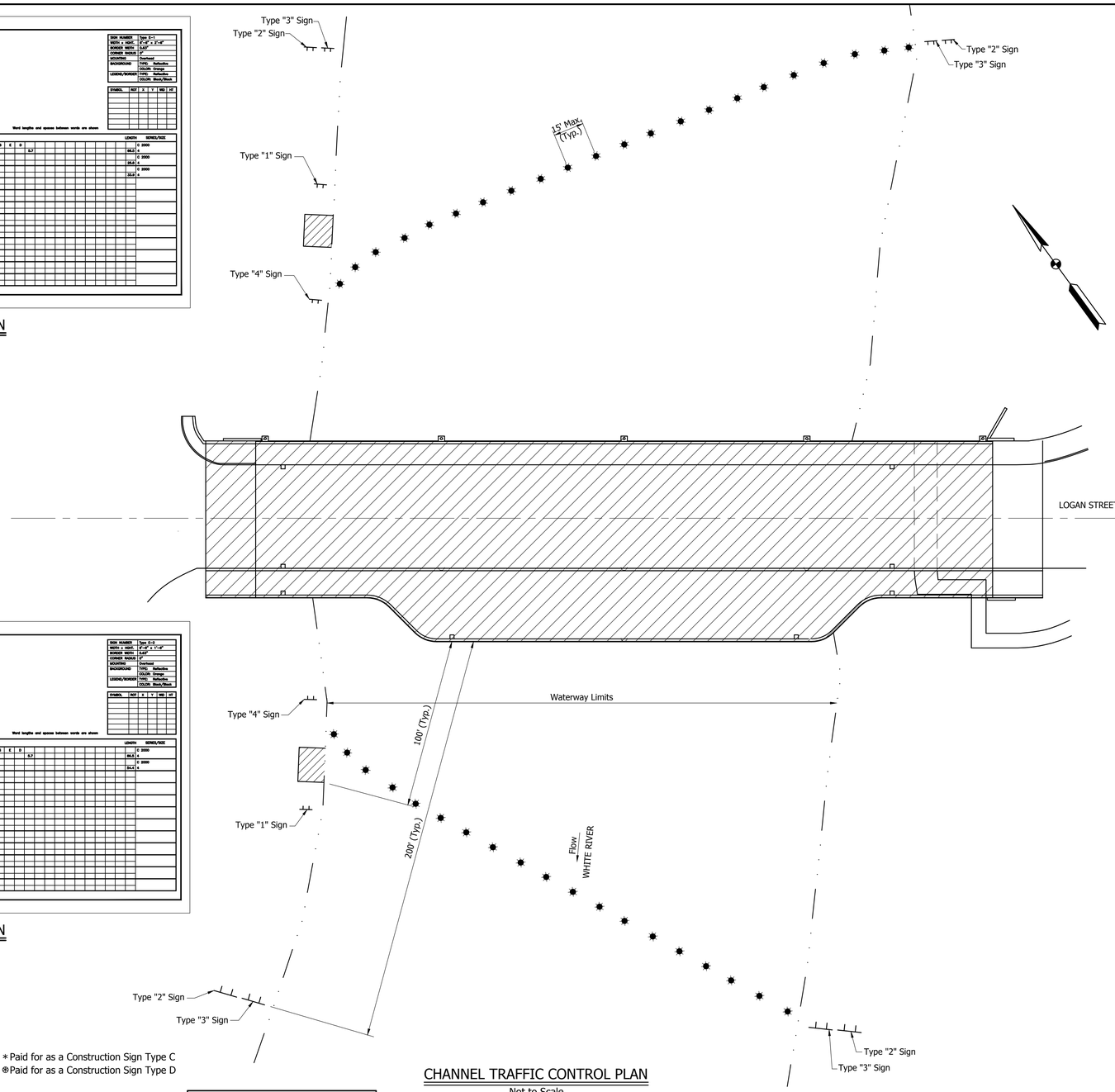

CHANNEL TRAFFIC CONTROL PLAN

Not to Scale

WATERWAY SIGN QUANTITIES	
SIGN TYPE	REQUIRED NUMBER
∗1	2
∗2	4
∗3	4
⊛4	2

∗Paid for as a Construction Sign Type C
⊛Paid for as a Construction Sign Type D

LEGEND

TYPE "1", "2", "3" or "4" SIGN

TEMPORARY PORTAGE AREA

BUOY WITH TYPE "A" STEADY BURNING CONSTRUCTION WARNING LIGHT

Note:
Signs may be placed on land at water's edge, provided they are fully visible from upstream.

BRYAN WRIGHT REGISTERED No. PE11100630 STATE OF INDIANA PROFESSIONAL ENGINEER

RECOMMENDED FOR APPROVAL: DESIGN ENGINEER 4/24/2018 DATE

DESIGNED: C. O'BRIEN DRAWN: D. SHEETZ
CHECKED: B. WRIGHT CHECKED: B. WRIGHT

BRIDGE NO.207
OVER WHITE RIVER
HAMILTON COUNTY

Headquarters
8450 WESTFIELD BLVD., SUITE 300
INDIANAPOLIS, IN. 46240-8302
TEL 317-713-4615
FAX 317-713-4616
www.BFSEngr.com

Branch Locations
FORT WAYNE 260-459-1532
LOUISVILLE 502-593-1996
LAFAYETTE 765-423-5602
MERRILLVILLE 219-769-2333
PLAINFIELD 317-839-3242

Butler Fairman & Seufert CIVIL ENGINEERS

HORIZONTAL SCALE	BRIDGE FILE
1" = 20'-0"	HAMILTON 207
VERTICAL SCALE	DESIGNATION
1" = 10'-0"	
SURVEY BOOK	SHEET
ELECTRONIC	8 OF 59
CONTRACT	PROJECT
	PB-18-0001

BFS NO. 6063

H:\606300000\Pro_Development\Design\Drawings\606393160.dwg Donald Sheetz Plot:6/25/2018 1:35 PM Save:4/18/2018 8:15 AM

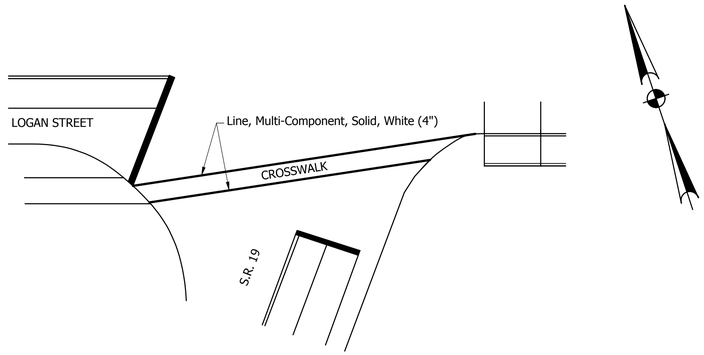

CROSSWALK IN SW QUADRANT

Not to Scale

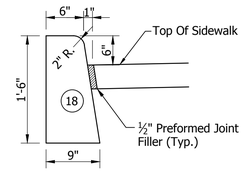

VERTICAL CONCRETE CURB DETAIL

Not To Scale

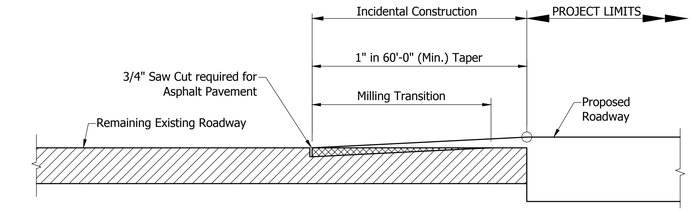

SECTION

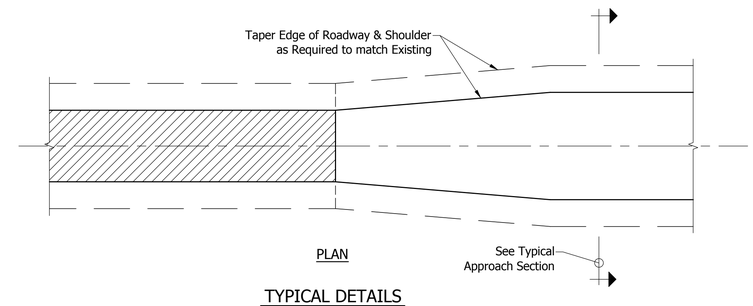

PLAN

TYPICAL DETAILS
INCIDENTAL CONSTRUCTION

Not to Scale

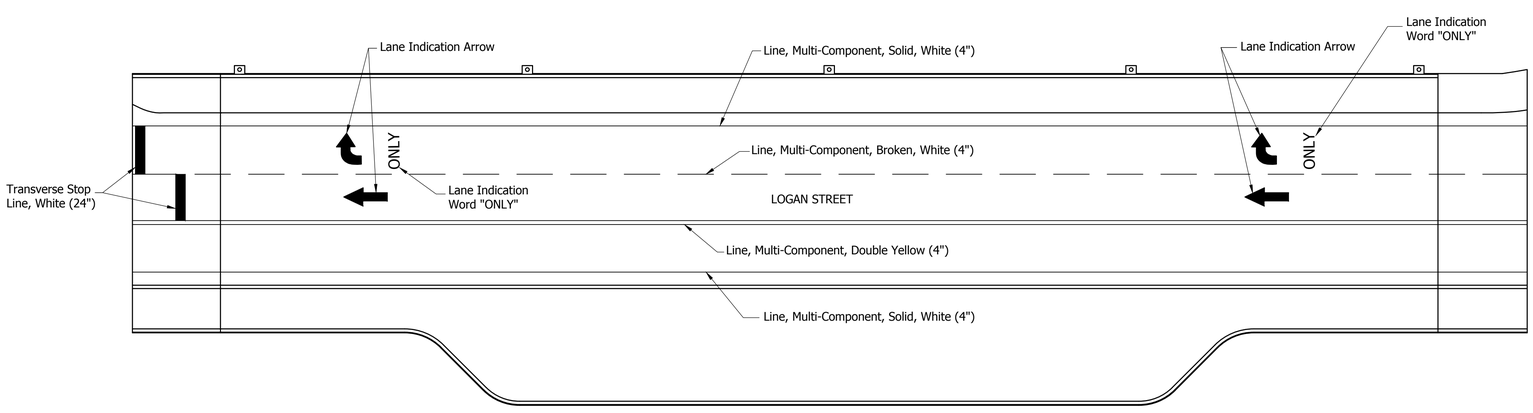

STRIPING DIAGRAM

Not to Scale

APPROACH DETAILS

BRYAN WRIGHT
REGISTERED
No. PE11100630
STATE OF INDIANA
PROFESSIONAL ENGINEER

RECOMMENDED FOR APPROVAL: 4/24/2018
DESIGN ENGINEER DATE

DESIGNED: B. WRIGHT DRAWN: D. SHEETZ
CHECKED: C. OBRIEN CHECKED: B. WRIGHT

BRIDGE NO.207
OVER WHITE RIVER
HAMILTON COUNTY

Headquarters
8450 WESTFIELD BLVD., SUITE 300
INDIANAPOLIS, IN. 46240-8302
TEL 317-713-4615
FAX 317-713-4616
www.BFSEngr.com

Butler Fairman & Seufert CIVIL ENGINEERS

Branch Locations
FORT WAYNE 260-459-1532
LOUISVILLE 502-593-1996
LAFAYETTE 765-423-5602
MERRILLVILLE 219-769-2333
PLAINFIELD 317-839-3242

HORIZONTAL SCALE	BRIDGE FILE
AS NOTED	HAMILTON 207
VERTICAL SCALE	DESIGNATION
AS NOTED	
SURVEY BOOK	SHEET
ELECTRONIC	9 OF 59
CONTRACT	PROJECT
	PB-18-0001

BFS NO. 6063

H:\606300.0000\ProDevelopment\Design\Drawings\606383T1.dwg Donald Sheetz Plot:6/25/2018 1:35 PM Save:4/25/2018 7:27 AM

BORING LOG

BORING NO.: **TB-1**
SHEET 1 OF 3
NORTHING : 1
EASTING : 1
DATUM :

GEOTECHNICAL CONSULTANT : ATC Group Services LLC
DES NO. : N/A STRUCTURE #: Hamilton Co. No. 207
PROJECT TYPE: Bridge Widening
LOCATION : Logan Street over White River, Noblesville, Indiana
COUNTY : Hamilton PROJECT NO.: 170GC00513
DATE STARTED : 08-28-17
DATE COMPLETED : 08-28-17

ELEVATION : 767.0
STATION : 35+76
OFFSET : 9.0 ft Right
LINE : "A"
DEPTH : 100.0 ft

BORING METHOD : Hollow Stem Auger
RIG TYPE : Truck
CASING DIA. : --
CORE SIZE : --

HAMMER : Auto
DRILLER/INSP : W. Bates/S. Rushfeldt
TEMPERATURE : 70 °F
WEATHER : Night

GROUNDWATER: Encountered at 23.5 ft At completion 23.5 ft -- After -- hours Caved in at 24.2 ft

ELEVATION	SAMPLE DEPTH	SOIL/MATERIAL DESCRIPTION	SAMPLE NUMBER	SPT per 6"	% RECOVERY	MOISTURE CONTENT	DRY DENSITY, pcf	POCKET PEN., tsf	UNCONF. COMP., tsf	ATTERBERG LIMITS LL	PL	PI	REMARKS
		7 in. Asphalt 0.6											0.0, Station and offset estimated from 2001 bridge plans prepared by Floyd E. Burroughs & Associates, Inc. 0.1, Ground surface elevation estimated from preliminary bridge plans provided by BF&S.
765.0		Light gray, slightly moist, crushed limestone, asphalt and concrete fragments (Visual) (FILL) 3.5	SS1	18-12-17	44								
	5	Dark brown, slightly moist, medium dense, sand A-2-4 (Visual) (FILL) 6.0	SS2	6-8-9	67								
760.0			SS3	8-10-14	100					NP	NP	NP	
	10	**Gravelly Sand A-1-b (0)**, Light brown, slightly moist, medium dense to loose, (Lab No. 1) 11.5	SS4	4-8-2	44								
755.0		**Sandy Loam A-6 (3)**, Brown and gray, moist, soft, (Lab No. 2) 13.5	SS5	3-2-3	100	26.7				33	18	15	
	15		SS6	2-2-2	100					NP	NP	NP	
750.0		**Sandy Loam A-2-4 (0)**, Brown, slightly moist, very loose to loose, (Lab No. 3) 19.0	SS7	3-4-3	100								
	20		SS8	2-2-1	44								
745.0		**Sandy Gravel A-1-a (0)**, Brown, slightly moist, very loose, (Lab No. 4) 23.5	SS9	2-1-2	100								
	25	**Sandy Gravel A-1-a**, Gray, wet, medium dense, (Lab No. 4) 26.0	SS10	6-6-8	100					NP	NP	NP	25.0, Begin wash rotary drilling methods at 25 ft.
740.0		**Sandy Gravel A-1-a**, Brown, wet, medium dense, (Lab No. 4) 28.5	SS11	8-13-11	67								
	30		SS12	7-7-8	67	14.6		2.0					
735.0		**Clay Loam A-6 (6)**, Gray, moist, stiff to hard, (Lab No. 5)	SS13	6-7-8	100	13.2		1.75		25	12	13	
	35		SS14	5-17-27	100	9.2	134.9	4.5+	5.76				
730.0		38.0	SS15	15-31-40	100	11.3		2.5					
	40	**Sand and Gravel A-1-b (0)**, Gray, wet, medium dense to very dense, (Lab No. 6)	SS16	9-13-13	100								

Continued on next page

INDOT BORING LOG GC00513.GPJ INDOT TEMPLATE.GDT 12/4/17

BORING LOG

BORING NO.: **TB-1**
SHEET 2 OF 3
NORTHING : 1
EASTING : 1
DATUM :

GEOTECHNICAL CONSULTANT : ATC Group Services LLC
DES NO. : N/A STRUCTURE #: Hamilton Co. No. 207
PROJECT TYPE: Bridge Widening

ELEVATION	SAMPLE DEPTH	SOIL/MATERIAL DESCRIPTION	SAMPLE NUMBER	SPT per 6"	% RECOVERY	MOISTURE CONTENT	DRY DENSITY, pcf	POCKET PEN., tsf	UNCONF. COMP., tsf	ATTERBERG LIMITS LL	PL	PI	REMARKS
725.0													
	45		SS17	14-17-23	67								
720.0													
	50		SS18	18-27-12	100								
715.0													
	55		SS19	8-15-20	89								
710.0													
	60		SS20	13-21-23	89								60.0, Borehole backfilled with auger cuttings and patched with concrete at the surface.
705.0													
	65	**Sand and Gravel A-1-b (0)**, Gray, wet, medium dense to very dense, (Lab No. 6)	SS21	14-20-27	100								
700.0													
	70		SS22	9-11-14	100								
695.0													
	75		SS23	11-31-27	33								
690.0													
	80		SS24	13-38-30	100								
685.0													
	85		SS25	8-13-17	100								
680.0										NP	NP	NP	

Continued on next page

INDOT BORING LOG GC00513.GPJ INDOT TEMPLATE.GDT 12/4/17

BORING LOG

BORING NO.: **TB-1**
SHEET 3 OF 3
NORTHING : 1
EASTING : 1
DATUM :

GEOTECHNICAL CONSULTANT : ATC Group Services LLC
DES NO. : N/A STRUCTURE #: Hamilton Co. No. 207
PROJECT TYPE: Bridge Widening

ELEVATION	SAMPLE DEPTH	SOIL/MATERIAL DESCRIPTION	SAMPLE NUMBER	SPT per 6"	% RECOVERY	MOISTURE CONTENT	DRY DENSITY, pcf	POCKET PEN., tsf	UNCONF. COMP., tsf	ATTERBERG LIMITS LL	PL	PI	REMARKS
	90		SS26	6-9-20	100								
675.0		**Sand and Gravel A-1-b (0)**, Gray, wet, medium dense to very dense, (Lab No. 6)											
	95		SS27	9-16-26	100								
670.0													
	100	100.0	SS28	7-13-24	100								
		Bottom of Boring at 100.0 ft											
665.0													
	105												
660.0													
	110												
655.0													
	115												
650.0													
	120												
645.0													
	125												
640.0													
	130												
635.0													
	135												
630.0													

INDOT BORING LOG GC00513.GPJ INDOT TEMPLATE.GDT 12/4/17

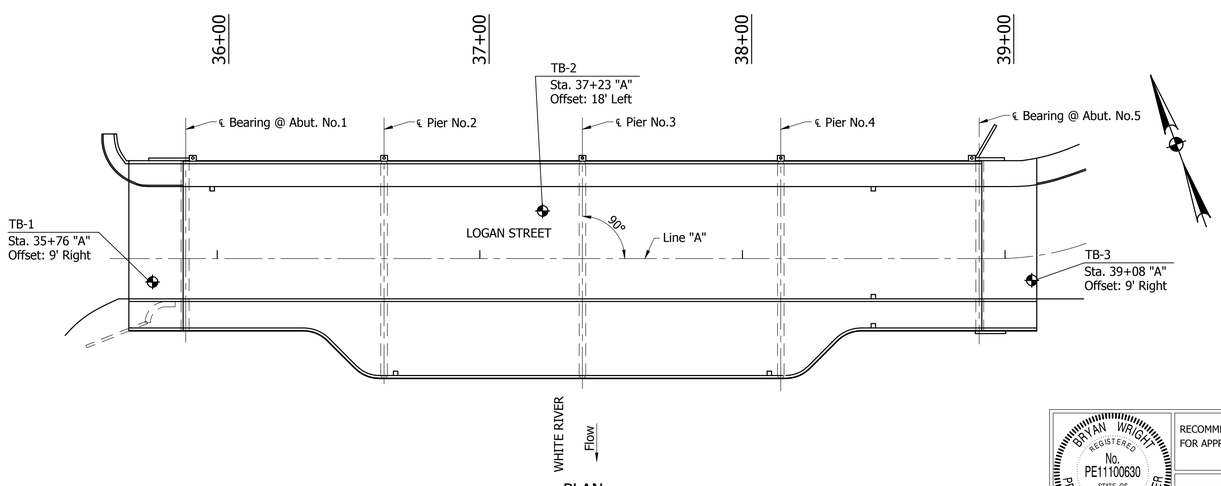

PLAN
Not to Scale

Substructure Locations	End Bent Nos. 1 & 5	Interior Pier Nos. 2, 3 & 4
Pile Type	Pipe	Pipe
Pile Size (diameter)	14 in.	14 in.
Grade of Steel	ASTM A252, Grade 3	ASTM A252, Grade 3
Minimum Shell Thickness, in.	0.375	0.375
Allowable Design Load / Pile, (kips)	160	175
Factor of Safety	2.0	2.0
Relaxation of Pile Tip in Shale, (kips)	0	0
Downdrag Friction, (kips)	0	0
Scour Zone Friction, (kips)	0	30
Ultimate Driving Load, (kips)*	320	380
Estimated Pile Tip Elevation	671	667
Minimum Pile Tip Elevation**	718	718

* "Ultimate Driving Load" is equivalent to "Nominal Driving Resistance (R_{ndr})" in the 2018 INDOT Standard Specifications Section 701.05(b).

**Minimum pile tip elevation should be at least 20 ft below the bottom of the end bent pile cap elevation or as required for end bent structural requirements and at least 10 ft below the Q_{100} scour elevation.

Method of Testing – Dynamic Pile Load Test – 2018 ISS 701.05(b) – One PDA test at an end bent and one PDA test at each of two different interior piers.

STANDARD PENETRATION TEST
Driving 2" O.D. Sampler 1'-6" with 140# Hammer falling 30". Count made at 6" intervals. First 6" for seating sampler. "N" is the Sum of the Hammer Blows of the Second and Third 6" intervals of an 1'-6" Drive.

NOTES
The entire Geotechnical Report developed by ATC will be made available to the Contractor upon request.
See Sheets 11 and 12 for Additional Soil Borings.

SOIL BORINGS

BRYAN WRIGHT REGISTERED No. PE11100630 STATE OF INDIANA PROFESSIONAL ENGINEER

RECOMMENDED FOR APPROVAL: DESIGN ENGINEER 4/24/2018 DATE

DESIGNED: B. WRIGHT DRAWN: D. SHEETZ
CHECKED: M. EICHENAUER CHECKED: B. WRIGHT

BRIDGE NO.207
OVER WHITE RIVER
HAMILTON COUNTY

Headquarters
8450 WESTFIELD BLVD., SUITE 300
INDIANAPOLIS, IN. 46240-8302
TEL 317-713-4615
FAX 317-713-4616
www.BFSEngr.com

Branch Locations
FORT WAYNE 260-459-1532
LOUISVILLE 502-593-1996
LAFAYETTE 765-423-5602
MERRILLVILLE 219-769-2333
PLAINFIELD 317-839-3242

Butler Fairman & Seufert CIVIL ENGINEERS

HORIZONTAL SCALE	BRIDGE FILE
AS NOTED	HAMILTON 207
VERTICAL SCALE	DESIGNATION
AS NOTED	
SURVEY BOOK	SHEET
ELECTRONIC	10 OF 59
CONTRACT	PROJECT
	PB-18-0001

BFS NO. 6063

H:\606300.0000\ProjDevelopment\Design\Drawings\606300701.dwg Donald Sheetz Plot:6/25/2018 1:35 PM Save: 4/18/2018 8:19 AM

BORING LOG

BORING NO.: TB-2
SHEET 1 OF 3

GEOTECHNICAL CONSULTANT : ATC Group Services LLC
DES NO. : N/A STRUCTURE #: Hamilton Co. No. 207
NORTHING : 1
EASTING : 2
PROJECT TYPE: Bridge Widening
DATUM :
LOCATION : Logan Street over White River, Noblesville, Indiana
DATE STARTED : 08-30-17
COUNTY : Hamilton PROJECT NO.: 170GC00513
DATE COMPLETED : 08-30-17

ELEVATION : 768.0
STATION : 37+23
OFFSET : 18.0 ft Left
LINE : "A"
DEPTH : 125.0 ft

BORING METHOD : Hollow Stem Auger
RIG TYPE : Truck
CASING DIA. : --
CORE SIZE : --

HAMMER : Auto
DRILLER/INSP : W. Bates/S. Rushfeldt
TEMPERATURE : 70 °F
WEATHER : Night

GROUNDWATER: Encountered at 27.0 ft At completion 27.0 ft -- After -- hours Caved in at --

ELEVATION	SAMPLE DEPTH	SOIL/MATERIAL DESCRIPTION	SAMPLE NUMBER	SPT per 6"	% RECOVERY	MOISTURE CONTENT	DRY DENSITY, pcf	POCKET PEN., tsf	UNCONF. COMP., tsf	ATTERBERG LIMITS LL	PL	PI	REMARKS
		9.5 in. Concrete 0.8											0.0, Station and offset estimated from 2001 bridge plans prepared by Floyd E. Burroughs & Associates, Inc. 0.1, Ground surface elevation estimated from preliminary bridge plans provided by BF&S.
765.0	5												
760.0	10												
755.0	15	Augers advanced to 27.1 ft through bridge deck. 2 inches of water in river channel at this location											
750.0	20												
745.0	25												
		27.1											27.1, Begin wash rotary drilling methods at 27.1 ft.
740.0	30	**Sandy Gravel A-1-a (0)**, Brown and gray, wet, loose, (Lab No. 7)	SS1	3-5-4	22					NP	NP	NP	
			SS2	4-2-5	67								
		33.5											
735.0	35		SS3	6-8-14	67	10.7		3.0					
		Clay Loam A-6, Gray, moist, very stiff to hard, (Lab No. 5)	SS4	9-13-21	100	10.6		4.0					
730.0	40		SS5	13-21-27	89	9.5		4.5+					

Continued on next page

INDOT BORING LOG GC00513.GPJ INDOT TEMPLATE.GDT 12/4/17

BORING LOG

BORING NO.: TB-2
SHEET 2 OF 3

GEOTECHNICAL CONSULTANT : ATC Group Services LLC
DES NO. : N/A STRUCTURE #: Hamilton Co. No. 207
NORTHING : 1
EASTING : 2
PROJECT TYPE: Bridge Widening
DATUM :

ELEVATION	SAMPLE DEPTH	SOIL/MATERIAL DESCRIPTION	SAMPLE NUMBER	SPT per 6"	% RECOVERY	MOISTURE CONTENT	DRY DENSITY, pcf	POCKET PEN., tsf	UNCONF. COMP., tsf	ATTERBERG LIMITS LL	PL	PI	REMARKS
		Clay Loam A-6, Gray, moist, very stiff to hard, (Lab No. 5)	SS6	17-23-31	100	10.0	132.2	4.5+	6.78				
		43.0											
725.0	45		SS7	4-18-34	100					NP	NP	NP	
		Sandy Gravel A-1-a (0), Gray, wet, very dense to medium dense, (Lab No. 8)	SS8	9-12-13	67								
720.0	50		SS9	12-15-17	100								
			SS10	14-17-19	100								
		53.5											
715.0	55		SS11	9-18-24	100					NP	NP	NP	
710.0	60		SS12	14-27-35	100								
705.0	65		SS13	10-7-17	100								
700.0	70	**Sand and Gravel A-1-b (0)**, Gray, wet, medium dense to very dense, (Lab No. 9)	SS14	15-18-19	100								
695.0	75		SS15	7-15-19	67								
690.0	80		SS16	13-24-15	100								80.0, Borehole backfilled with auger cuttings and patched with concrete at the surface.
685.0	85		SS17	12-16-19	67								
680.0													

Continued on next page

INDOT BORING LOG GC00513.GPJ INDOT TEMPLATE.GDT 12/4/17

BORING LOG

BORING NO.: TB-2
SHEET 3 OF 3

GEOTECHNICAL CONSULTANT : ATC Group Services LLC
DES NO. : N/A STRUCTURE #: Hamilton Co. No. 207
NORTHING : 1
EASTING : 2
PROJECT TYPE: Bridge Widening
DATUM :

ELEVATION	SAMPLE DEPTH	SOIL/MATERIAL DESCRIPTION	SAMPLE NUMBER	SPT per 6"	% RECOVERY	MOISTURE CONTENT	DRY DENSITY, pcf	POCKET PEN., tsf	UNCONF. COMP., tsf	ATTERBERG LIMITS LL	PL	PI	REMARKS
	90		SS18	13-26-32	78								
675.0		**Sand and Gravel A-1-b (0)**, Gray, wet, medium dense to very dense, (Lab No. 9)											
	95		SS19	15-38-42	67								
		98.5											
670.0	100		SS20	9-12-7	67					NP	NP	NP	
665.0	105	**Sandy Gravel A-1-a (0)**, Gray, wet, medium dense to very dense, (Lab No. 10)	SS21	11-14-19	67								
660.0	110		SS22	27-47-50/0.4	90								
		111.5											
655.0	115	**Silty Loam A-4 (3)**, Gray, moist, hard, (Lab No. 11)	SS23	29-38-46	100	20.3		3.25		21	14	7	
		117.0											
650.0	120	**Clay Loam A-6**, Gray, very moist, hard, (Lab No. 5)	SS24	30-37-46	100	12.3	126.5	0.75	1.43				
		123.0											
645.0	125	**Silty Loam A-4 (0)**, Gray, moist, very dense, (Lab No. 12) 125.0	SS25	33-45-48	100					18	13	5	
		Bottom of Boring at 125.0 ft											
640.0	130												
635.0	135												

INDOT BORING LOG GC00513.GPJ INDOT TEMPLATE.GDT 12/4/17

STANDARD PENETRATION TEST
Driving 2" O.D. Sampler 1'-6" with 140# Hammer falling 30". Count made at 6" intervals. First 6" for seating sampler. "N" is the Sum of the Hammer Blows of the Second and Third 6" intervals of an 1'-6" Drive.

NOTES
The entire Geotechnical Report developed by ATC will be made available to the Contractor upon request.
See Sheet 10 for Soil Boring Location Plan and Additional Soil Borings.
See Sheet 12 for Additional Soil Borings.

SOIL BORINGS

BRYAN WRIGHT REGISTERED No. PE11100630 STATE OF INDIANA PROFESSIONAL ENGINEER

RECOMMENDED FOR APPROVAL: DESIGN ENGINEER 4/24/2018 DATE

DESIGNED: B. WRIGHT DRAWN: D. SHEETZ
CHECKED: M. EICHENAUER CHECKED: B. WRIGHT

BRIDGE NO.207
OVER WHITE RIVER
HAMILTON COUNTY

Headquarters
8450 WESTFIELD BLVD., SUITE 300
INDIANAPOLIS, IN. 46240-8302
TEL 317-713-4615
FAX 317-713-4616
www.BFSEngr.com

Butler Fairman & Seufert
CIVIL ENGINEERS

Branch Locations
FORT WAYNE 260-459-1532
LOUISVILLE 502-593-1996
LAFAYETTE 765-423-5602
MERRILLVILLE 219-769-2333
PLAINFIELD 317-839-3242

HORIZONTAL SCALE	BRIDGE FILE
AS NOTED	HAMILTON 207
VERTICAL SCALE	DESIGNATION
AS NOTED	

SURVEY BOOK	SHEET		
ELECTRONIC	11	OF	59
CONTRACT	PROJECT		
	PB-18-0001		

BFS NO. 6063

H:\606300.0000\Pro_Development\Design\Drawings\606397102.dwg Donald Sheetz Plot:6/25/2018 1:35 PM Save:4/18/2018 8:19 AM

BORING LOG

BORING NO.: TB-3
SHEET 1 OF 3

GEOTECHNICAL CONSULTANT : ATC Group Services LLC
DES NO. : N/A STRUCTURE #: Hamilton Co. No. 207
PROJECT TYPE: Bridge Widening
LOCATION : Logan Street over White River, Noblesville, Indiana
COUNTY : Hamilton PROJECT NO.: 170GC00513

NORTHING : 1
EASTING : 3
DATUM :
DATE STARTED : 08-29-17
DATE COMPLETED : 08-29-17

ELEVATION : 767.0
STATION : 39+08
OFFSET : 9.0 ft Right
LINE : "A"
DEPTH : 100.0 ft

BORING METHOD : Hollow Stem Auger
RIG TYPE : Truck
CASING DIA. : --
CORE SIZE : --

HAMMER : Auto
DRILLER/INSP : W. Bates/S. Rushfeldt
TEMPERATURE : 70 °F
WEATHER : Night

GROUNDWATER: Encountered at 21.0 ft At completion None -- After -- hours Caved in at 18.5 ft.

ELEVATION	SAMPLE DEPTH	SOIL/MATERIAL DESCRIPTION	SAMPLE NUMBER	SPT per 6"	% RECOVERY	MOISTURE CONTENT	DRY DENSITY, pcf	POCKET PEN., tsf	UNCONF. COMP., tsf	ATTERBERG LIMITS LL	PL	PI	REMARKS
		14 in. Concrete (1.2)											
765.0		**Gravelly Sand A-1-b**, Brown, slightly moist, medium dense, (FILL) (visual) (2.0)	SS1	10-10-6	67								0.0, Station and offset estimated from 2001 bridge plans prepared by Floyd E. Burroughs & Associates, Inc.
	5	**Sandy Loam A-4 (0)**, Dark brown, moist, very soft to medium stiff, (Lab No. 13) (8.5)	SS2	2-1-2	89	20.2							
760.0			SS3	2-3-4	100	18.1		0.25		24	15	9	0.1, Ground surface elevation estimated from preliminary bridge plans provided by BF&S.
	10	**Sandy Gravel A-1-a (0)**, Brown, slightly moist, loose to dense, (Lab No. 14)	SS4	4-3-6	44					NP	NP	NP	
755.0			SS5	10-10-11	100								6.0, Organic Content=2.2%, Ca/MgCO3=4%
	15		SS6	7-12-14	89								
750.0			SS7	14-14-23	67								
	20	(21.0)	SS8	8-8-10	67								
745.0		**Sand and Gravel A-1-b (0)**, Brown and gray, wet, medium dense, (Lab No. 15) (23.5)	SS9	10-8-8	89					NP	NP	NP	
	25	**Clay Loam A-6**, Gray, moist, very stiff to hard, (Lab No. 5)	SS10	8-13-17	100	11.0		4.5+					
740.0			SS11	21-26-34	100	10.5		4.5+					
	30		SS12	11-16-21	100	10.3		4.5+					
735.0			SS13	26-32-37	100	8.9	132.6	4.5+	10.48				
	35		SS14	13-21-28	100	10.5		4.5+					
730.0			SS15	8-24-36	89	10.8	131.8	3.5	3.56				
	40	(40.0)	SS16	13-32-46	100								38.5, Begin wash rotary

Continued on next page

INDOT BORING LOG GC00513.GPJ INDOT TEMPLATE.GDT 12/4/17

BORING LOG

BORING NO.: TB-3
SHEET 2 OF 3

GEOTECHNICAL CONSULTANT : ATC Group Services LLC
DES NO. : N/A STRUCTURE #: Hamilton Co. No. 207
PROJECT TYPE: Bridge Widening

NORTHING : 1
EASTING : 3
DATUM :

ELEVATION	SAMPLE DEPTH	SOIL/MATERIAL DESCRIPTION	SAMPLE NUMBER	SPT per 6"	% RECOVERY	MOISTURE CONTENT	DRY DENSITY, pcf	POCKET PEN., tsf	UNCONF. COMP., tsf	ATTERBERG LIMITS LL	PL	PI	REMARKS
725.0													drilling methods at 38.5 ft.
	45		SS17	8-16-22	100								
720.0													
	50		SS18	9-16-22	67								
715.0													
	55		SS19	11-14-23	39					NP	NP	NP	
710.0													
	60	**Gravelly Sand A-1-b (0)**, Gray, wet, very dense to dense, (Lab No. 16)	SS20	15-20-22	67								
705.0													60.0, Borehole backfilled with auger cuttings and patched with concrete at the surface.
	65		SS21	13-17-19	61								
700.0													
	70		SS22	14-14-20	78								
695.0													
	75		SS23	24-23-23	100								
690.0													
	80		SS24	26-38-49	89								
685.0		(83.5)											
	85	**Gravelly Sand A-1-b (0)**, Gray, wet, medium dense to very dense, (Lab No. 17)	SS25	15-18-19	67								
680.0										NP	NP	NP	

Continued on next page

INDOT BORING LOG GC00513.GPJ INDOT TEMPLATE.GDT 12/4/17

BORING LOG

BORING NO.: TB-3
SHEET 3 OF 3

GEOTECHNICAL CONSULTANT : ATC Group Services LLC
DES NO. : N/A STRUCTURE #: Hamilton Co. No. 207
PROJECT TYPE: Bridge Widening

NORTHING : 1
EASTING : 3
DATUM :

ELEVATION	SAMPLE DEPTH	SOIL/MATERIAL DESCRIPTION	SAMPLE NUMBER	SPT per 6"	% RECOVERY	MOISTURE CONTENT	DRY DENSITY, pcf	POCKET PEN., tsf	UNCONF. COMP., tsf	ATTERBERG LIMITS LL	PL	PI	REMARKS
	90		SS26	8-9-19	44								
675.0													
	95	**Gravelly Sand A-1-b (0)**, Gray, wet, medium dense to very dense, (Lab No. 17)	SS27	13-13-14	100								
670.0													
	100	(100.0)	SS28	16-27-31	100								
		Bottom of Boring at 100.0 ft											
665.0													
	105												
660.0													
	110												
655.0													
	115												
650.0													
	120												
645.0													
	125												
640.0													
	130												
635.0													
	135												
630.0													

INDOT BORING LOG GC00513.GPJ INDOT TEMPLATE.GDT 12/4/17

STANDARD PENETRATION TEST
Driving 2" O.D. Sampler 1'-6" with 140# Hammer falling 30". Count made at 6" intervals. First 6" for seating sampler. "N" is the Sum of the Hammer Blows of the Second and Third 6" intervals of an 1'-6" Drive.

NOTES
The entire Geotechnical Report developed by ATC will be made available to the Contractor upon request.
See Sheet 10 for Soil Boring Location Plan and Additional Soil Borings.
See Sheet 11 for Additional Soil Borings.

SOIL BORINGS

BRYAN WRIGHT REGISTERED No. PE11100630 STATE OF INDIANA PROFESSIONAL ENGINEER

RECOMMENDED FOR APPROVAL: DESIGN ENGINEER 4/24/2018 DATE

DESIGNED: B. WRIGHT DRAWN: D. SHEETZ
CHECKED: M. EICHENAUER CHECKED: B. WRIGHT

BRIDGE NO.207
OVER WHITE RIVER
HAMILTON COUNTY

Headquarters
8450 WESTFIELD BLVD., SUITE 300
INDIANAPOLIS, IN. 46240-8302
TEL 317-713-4615
FAX 317-713-4616
www.BFSEngr.com

BF&S Butler Fairman & Seufert CONSULTING ENGINEERS

Branch Locations
FORT WAYNE 260-459-1532
LOUISVILLE 502-593-1996
LAFAYETTE 765-423-5602
MERRILLVILLE 219-769-2333
PLAINFIELD 317-839-3242

HORIZONTAL SCALE	BRIDGE FILE
AS NOTED	HAMILTON 207
VERTICAL SCALE	DESIGNATION
AS NOTED	
SURVEY BOOK	SHEET
ELECTRONIC	12 OF 59
CONTRACT	PROJECT
	PB-18-0001

BFS NO. 6063

H:\206300.0000\ProjDevelopment\Design\Drawings\06B39703.dwg Donald Sheetz Plot:6/25/2018 1:35 PM Saved:4/18/2018 8:19 AM

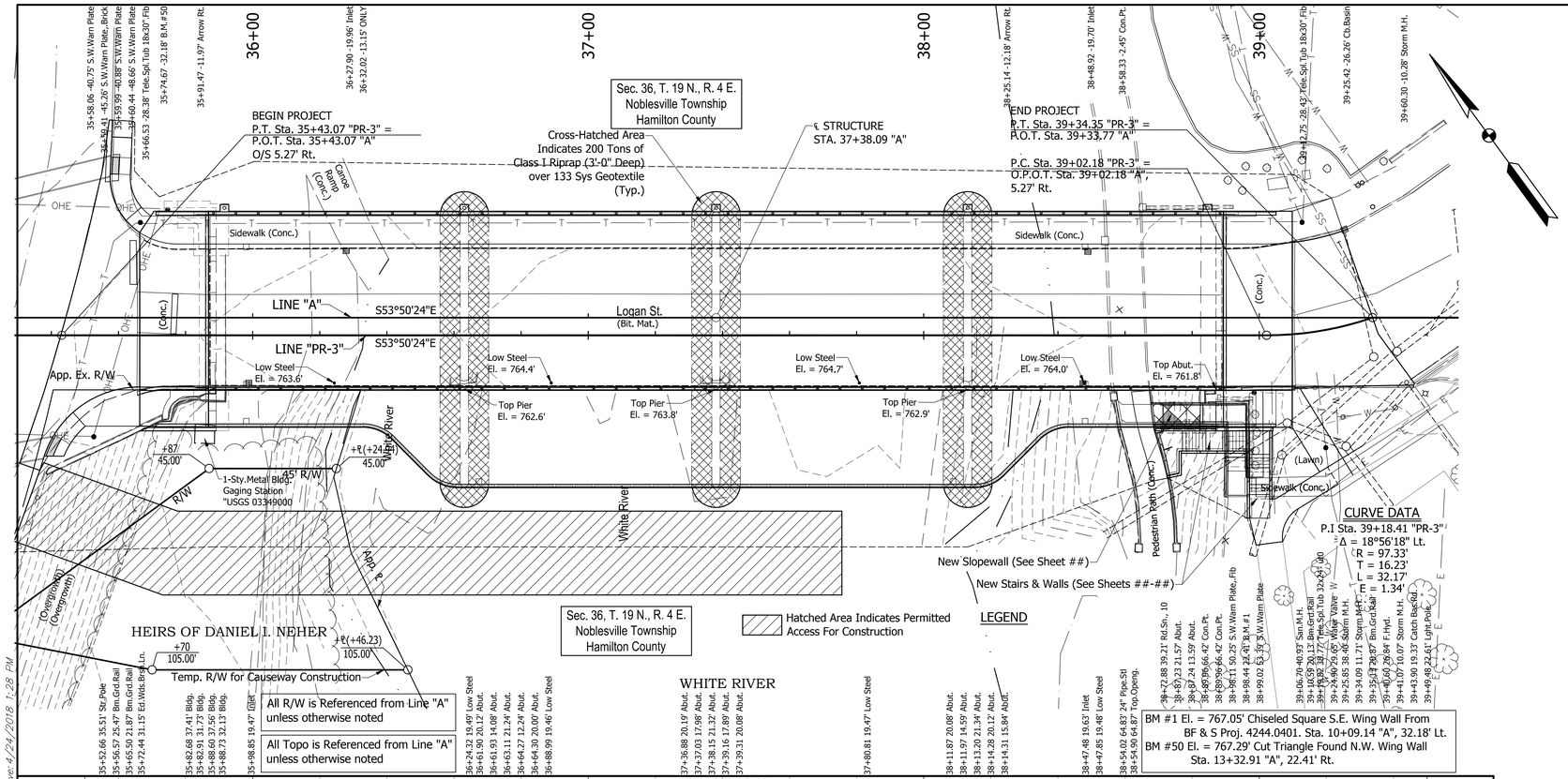

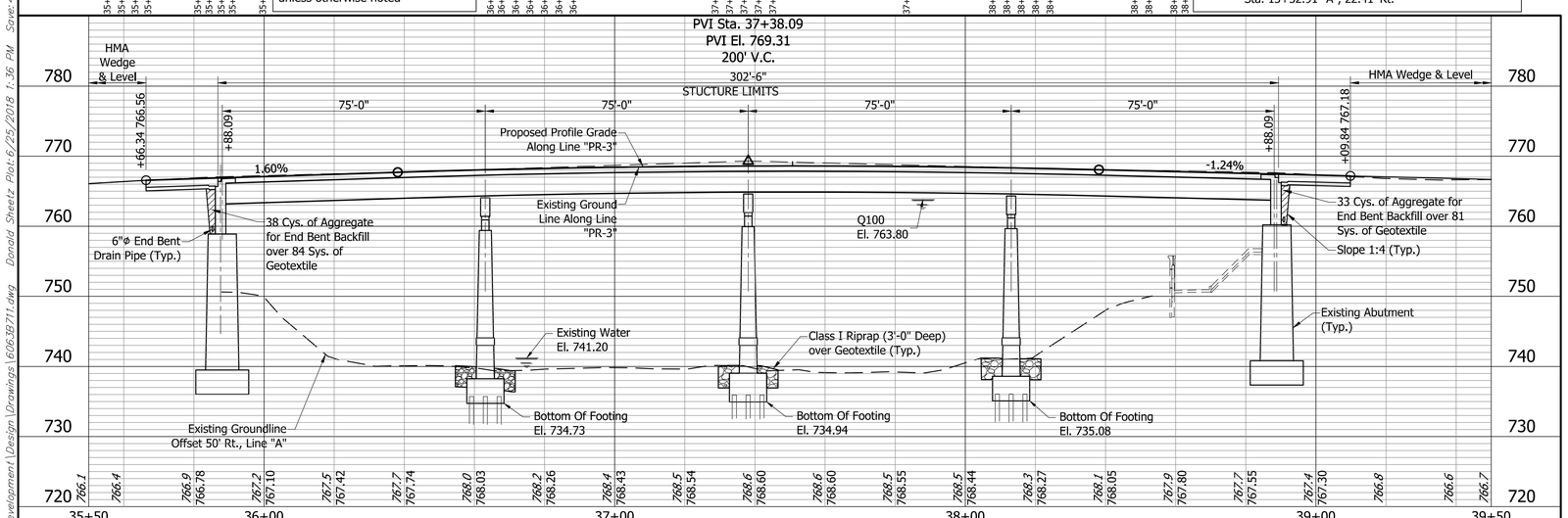

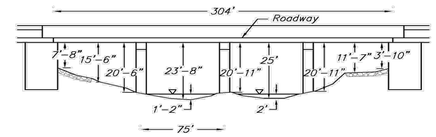

EXISTING STRUCTURE

The Existing Structure is a 4 Span Continuous Steel Beam Bridge. The Out to Out Width = 53.4"±. Portions of existing structure to be removed.

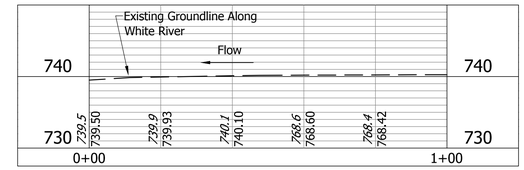

EXISTING PROFILE ALONG WHITE RIVER

Scale: Horz. 1" = 20'-0"

HYDRAULIC SCOUR DATA	
Q100 FLOW	46,000 Ft./Sec.
Q100 ELEVATION	El. 763.8
Q100 CONTRACTION SCOUR	1.36 Ft.
Q100 TOTAL SCOUR	12.05 Ft.
Q100 MAX VELOCITY	11.10 FT./SEC.

CURVE DATA

P.I Sta. 39+18.41 "PR-3"
Δ = 18°56'18" Lt.
R = 97.33'
T = 16.23'
L = 32.17'
E = 1.34'

EARTHWORK

ITEM	EXISTING STRUCTURE
FILL + 20%	0 Cys.
COMMON EXCAVATION	100 Cys.
BORROW	0 Cys.
AGGREGATE FOR END BENT BACKFILL	71 Cys.
FOUNDATION EXCAVATION (UNCLASSIFIED)	190 Cys.
WET EXCAVATION	375 Cys.

LAYOUT

COMPOSITE STEEL W-BEAM BRIDGE

4 SPANS AT 75'-0", NO SKEW,
42'-10" CLEAR ROADWAY, ON LOGAN STREET
OVER WHITE RIVER

N. 1748107.961
E. 229941.968
P.O.T. Sta. 35+00.00 "A"

N. 1749071.945
E. 230264.977
P.O.T. Sta. 39+00.00 "A"

BRYAN WRIGHT
REGISTERED
No. PE11100630
STATE OF INDIANA
PROFESSIONAL ENGINEER

RECOMMENDED FOR APPROVAL: DESIGN ENGINEER 4/24/2018 DATE

DESIGNED: C. O'BRIEN DRAWN: J. THURMAN
CHECKED: B. WRIGHT CHECKED: B. WRIGHT

BRIDGE NO.207
OVER WHITE RIVER
HAMILTON COUNTY

Headquarters
8450 WESTFIELD BLVD., SUITE 300
INDIANAPOLIS, IN. 46240-8302
TEL. 317-713-4615
FAX. 317-713-4616
www.BFSEngr.com

Butler Fairman & Seufert
CIVIL ENGINEERS

Branch Locations
FORT WAYNE 260-459-1532
LOUISVILLE 502-593-1996
LAFAYETTE 765-423-5602
MERRILLVILLE 219-769-2333
PLAINFIELD 317-839-3242

HORIZONTAL SCALE	1" = 20'-0"
VERTICAL SCALE	1" = 10'-0"
BRIDGE FILE	HAMILTON 207
DESIGNATION	
SURVEY BOOK	
ELECTRONIC	13 OF 59
CONTRACT	
PROJECT	PB-18-0001

BFS NO. 6063

H:\606300000\ProDevelopment\Design\Drawings\606397.dwg Donald Sheetz Plot:6/25/2018 1:36 PM Save:4/24/2018 1:28 PM

STRUCTURE IS BUILT ON A 200' VERTICAL CURVE

1985 ORIGINAL P.G. DATA
P.V.I. Sta. 37+38.09
El. 769.31
V.C.=200'
+1.60% -1.24%

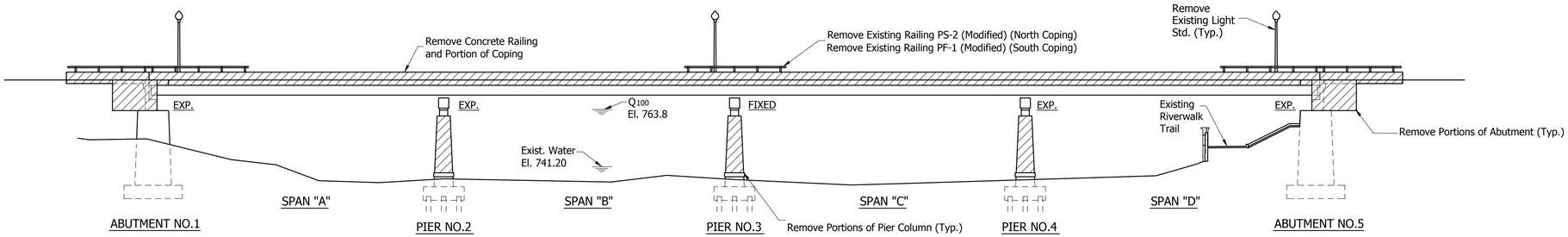

Note: Hatched Areas indicate Portions to be Removed.

ELEVATION
Scale: 1/16"=1'-0"

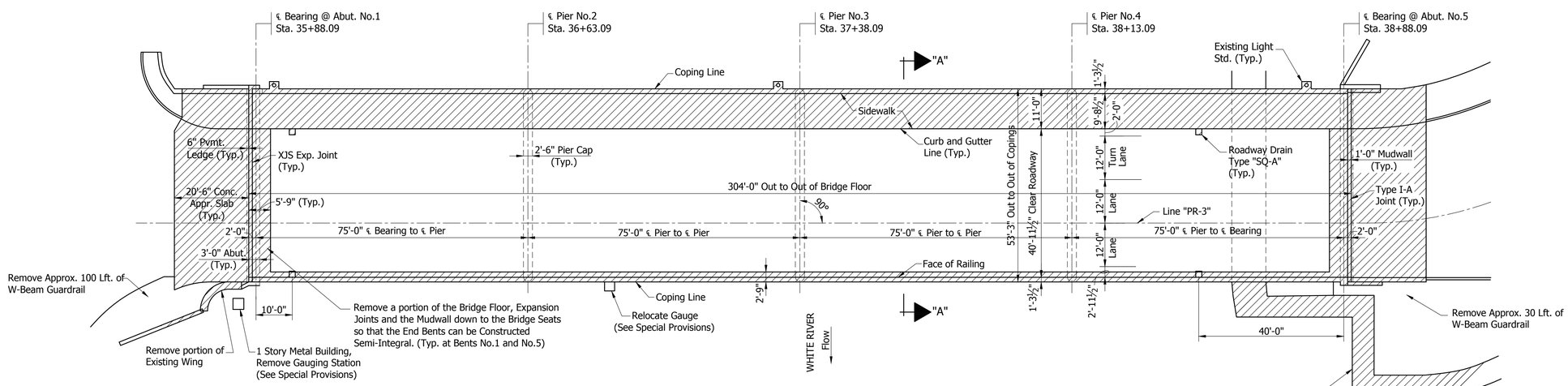

PLAN
Scale: 1/16"=1'-0"

NOTES
See Sheet 15 for Section "A-A".
See Sheet 16 for Proposed Structure General Plan.
See Sheet 17 for General Notes, Design Data and Material Notes.

GENERAL PLAN
EXISTING STRUCTURE

BRYAN WRIGHT REGISTERED No. PE11100630 STATE OF INDIANA PROFESSIONAL ENGINEER

RECOMMENDED FOR APPROVAL: DESIGN ENGINEER 4/24/2018 DATE

DESIGNED: B. WRIGHT DRAWN: D. SHEETZ
CHECKED: D. SHEETZ CHECKED: B. WRIGHT

BRIDGE NO.207
OVER WHITE RIVER
HAMILTON COUNTY

Headquarters
8450 WESTFIELD BLVD., SUITE 300
INDIANAPOLIS, IN. 46240-8302
TEL 317-713-4615
FAX 317-713-4616
www.BFSEngr.com

BF&S Butler Fairman & Seufert ENGINEERS

Branch Locations
FORT WAYNE 260-459-1532
LOUISVILLE 502-593-1996
LAFAYETTE 765-423-5602
MERRILLVILLE 219-769-2333
PLAINFIELD 317-839-3242

HORIZONTAL SCALE	BRIDGE FILE
AS NOTED	HAMILTON 207
VERTICAL SCALE	DESIGNATION
AS NOTED	

SURVEY BOOK	SHEET		
ELECTRONIC	14	OF	59
CONTRACT	PROJECT		
	PB-18-0001		

BFS NO. 6063

H:\606300.0000\ProjDevelopment\Design\Drawings\606389221.dwg Donald Sheetz Plot:6/25/2018 1:36 PM Save:4/18/2018 8:19 AM

Note: Hatched Areas indicate Portions to be Removed

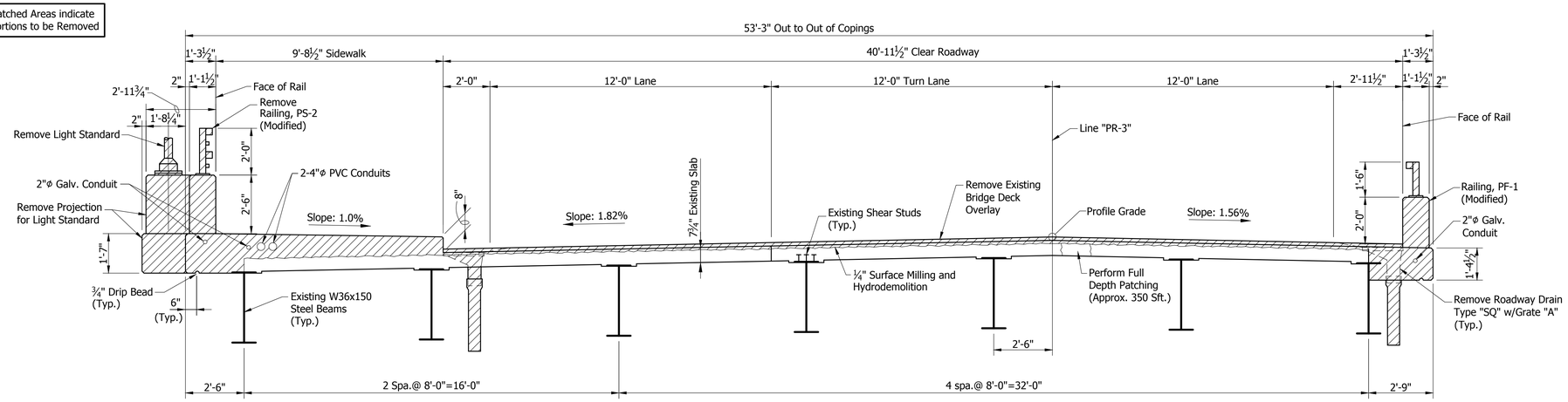

EXISTING SECTION "A-A"

Scale: ⅜"=1'-0"

GENERAL PLAN

EXISTING STRUCTURE

BRYAN WRIGHT REGISTERED No. PE11100630 STATE OF INDIANA PROFESSIONAL ENGINEER

RECOMMENDED FOR APPROVAL: _____ DESIGN ENGINEER 4/24/2018 DATE

DESIGNED: B. WRIGHT DRAWN: D. SHEETZ

CHECKED: D. SHEETZ CHECKED: B. WRIGHT

BRIDGE NO.207
OVER WHITE RIVER
HAMILTON COUNTY

Headquarters
8450 WESTFIELD BLVD., SUITE 300
INDIANAPOLIS, IN. 46240-8302
TEL 317-713-4615
FAX 317-713-4616
www.BFSEngr.com

BF&S Butler Fairman & Seufert CIVIL ENGINEERS

Branch Locations
FORT WAYNE 260-459-1532
LOUISVILLE 502-593-1996
LAFAYETTE 765-423-5602
MERRILLVILLE 219-769-2333
PLAINFIELD 317-839-3242

HORIZONTAL SCALE	BRIDGE FILE
AS NOTED	HAMILTON 207
VERTICAL SCALE	DESIGNATION
AS NOTED	

SURVEY BOOK	SHEET		
ELECTRONIC	15	OF	59
CONTRACT	PROJECT		
	PB-18-0001		

BFS NO. 6063

H:\606300.0000\ProDevelopment\Design\Drawings\606382Z3.dwg Donald Sheetz Plot:6/25/2018 1:36 PM Save:4/24/2018 7:25 AM

STRUCTURE IS BUILT ON A 200' VERTICAL CURVE

1985 ORIGINAL P.G. DATA
P.V.I. Sta. 37+38.09
El. 769.31
V.C.=200'
+1.60% -1.24%

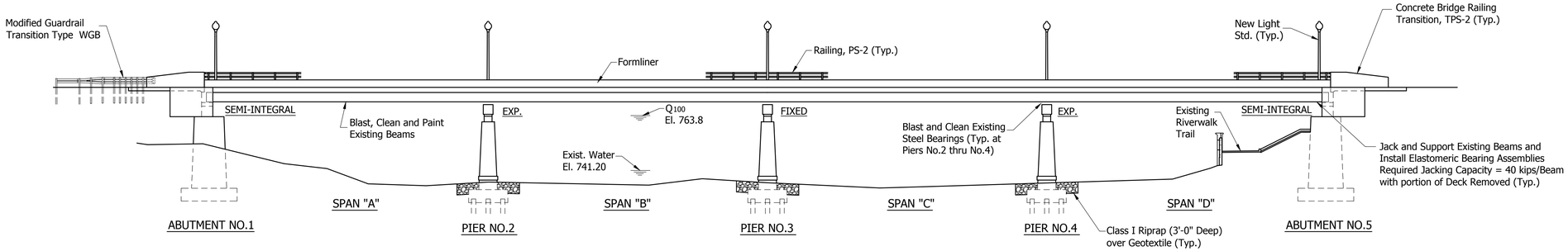

ELEVATION

Scale: 1/16"=1'-0"

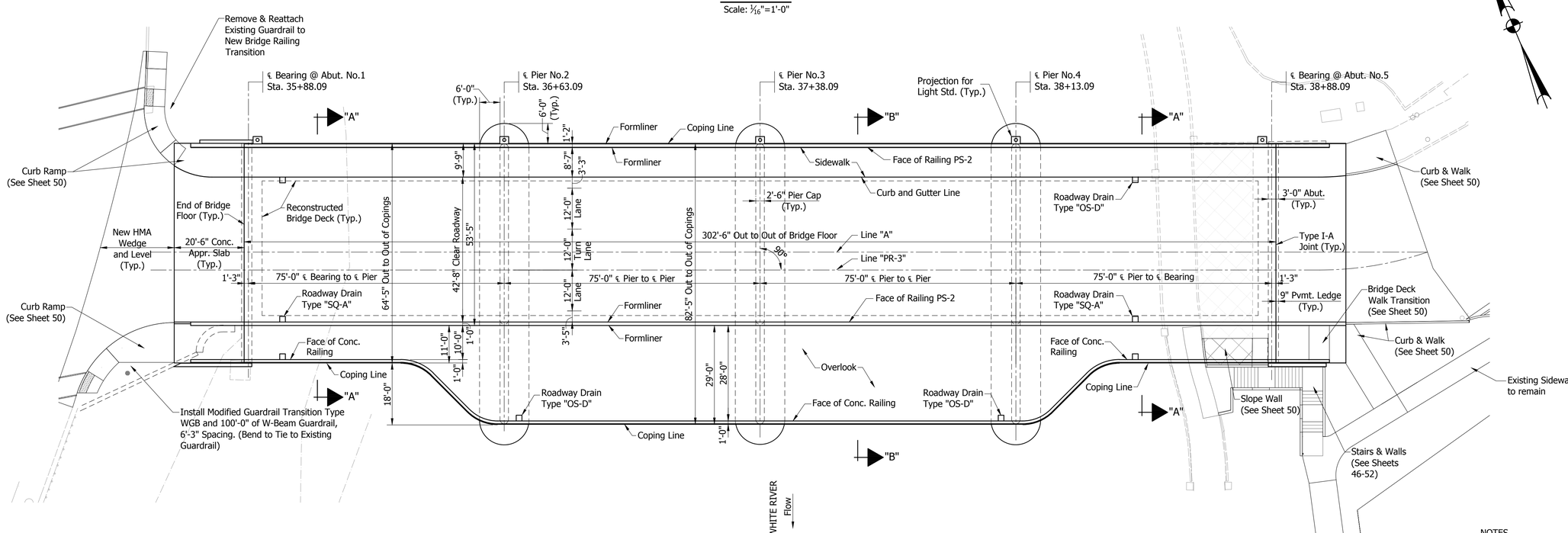

PLAN

Scale: 1/16"=1'-0"

NOTES

See Sheet 14 for Existing Structure General Plan.
See Sheet 17 for Section "A-A", General Notes, Design Data and Material Notes.
See Sheet 18 for Section "B-B".

GENERAL PLAN
PROPOSED STRUCTURE

BRYAN WRIGHT REGISTERED No. PE11100630 STATE OF INDIANA PROFESSIONAL ENGINEER

RECOMMENDED FOR APPROVAL: DESIGN ENGINEER 4/24/2018 DATE

DESIGNED: B. WRIGHT DRAWN: D. SHEETZ
CHECKED: D. SHEETZ CHECKED: B. WRIGHT

BRIDGE NO.207
OVER WHITE RIVER
HAMILTON COUNTY

Headquarters
8450 WESTFIELD BLVD., SUITE 300
INDIANAPOLIS, IN. 46240-8302
TEL 317-713-4615
FAX 317-713-4616
www.BFSEngr.com

BF&S Butler Fairman & Seufert CIVIL ENGINEERS

Branch Locations
FORT WAYNE 260-459-1532
LOUISVILLE 502-593-1996
LAFAYETTE 765-423-5602
MERRILLVILLE 219-769-2333
PLAINFIELD 317-839-3242

HORIZONTAL SCALE	BRIDGE FILE
AS NOTED	HAMILTON 207
VERTICAL SCALE	DESIGNATION
AS NOTED	

SURVEY BOOK	SHEET		
ELECTRONIC	16	OF	59
CONTRACT	PROJECT		
	PB-18-0001		

BFS NO. 6063

H:\606300.0000\ProDevelopment\Design\Drawings\606387Z2.dwg Donald Sheetz Plot:6/25/2018 1:36 PM Save:6/25/2018 9:55 AM

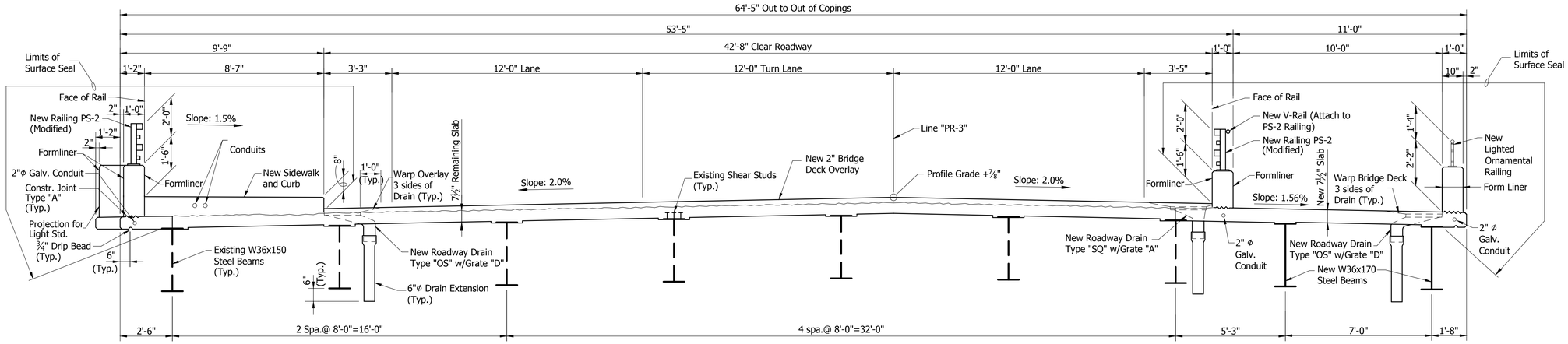

PROPOSED SECTION "A-A"

Scale: ⅜"=1'-0"

GENERAL NOTES

Plans for the existing structure are on file with the Hamilton County Highway Department as Hamilton 207 and are available upon request.

Portions of present structure shall be removed.

Where new work is to be fitted to old work, the Contractor shall check all dimensions and conditions in the field and report any errors or discrepancies to the Engineer and assume responsibility for their correctness and the fit of the new part to the old.

Epoxy coated reinforcing bars shall be required in various portions of the structure as shown.

Reinforcing bars covering shall be 2-1/2" in top of approach slabs.

Reinforcing bars covering shall be 2-1/2" in top and 1" in bottom of floor slabs and 2" in all other areas unless noted.

Reinforcing bars shall be A.S.T.M. A615, Grade 60.

Concrete shall be Class C in floor slab and bridge railings.

Concrete shall be Class "B" in Footings.

Concrete shall be Class "A" in all portions of the project not noted above.

Chamfer exposed corners of concrete 1" unless noted.

Surface seal shall be required as shown on the detailed areas of the structure as shown. Estimated quantity = 19255 Sft.

Permanent deck forms wiil not be permitted.

Paint existing and proposed beams RAL 7016 Anthracite Grey including exposed bearing assembly steel

MATERIAL NOTES

Bridge Deck Overlay:

2" Min. Latex Modified Portland Cement Concrete

HMA Wedge:

165 Lbs./Sys. HMA Surface Type D

DESIGN DATA

MATERIAL DESIGN STRENGTHS:

Class "C" Concrete	F'c = 4,000 p.s.i.
Class "A" Concrete	F'c = 3,500 p.s.i.
Class "B" Concrete	F'c = 3,000 p.s.i.
Reinforcing Bars (Grade 60)	Fy = 60,000 p.s.i.

LIVE LOAD:

HS20-44 loading with distribution in accordance with 2002 A.A.S.H.T.O. Specifications. Load Factor = 2.17

90 psf pedestrian loading or an H10-44 loading in accordance with 2009 A.A.S.H.T.O. Guide Specifications for Design of Pedestrian Bridges and subsequent interim Specifications.

Note: Beam 8 checked for HS-20 during Traffic Maintenance Operations per AASHTO Guide Specifications 2002.

GENERAL PLAN
PROPOSED STRUCTURE

BRYAN WRIGHT REGISTERED No. PE11100630 STATE OF INDIANA PROFESSIONAL ENGINEER

RECOMMENDED FOR APPROVAL: DESIGN ENGINEER 4/24/2018 DATE

DESIGNED: B. WRIGHT DRAWN: D. SHEETZ

CHECKED: M. EICHENAUER CHECKED: B. WRIGHT

BRIDGE NO.207
OVER WHITE RIVER
HAMILTON COUNTY

Headquarters
8450 WESTFIELD BLVD., SUITE 300
INDIANAPOLIS, IN. 46240-8302
TEL 317-713-4615
FAX 317-713-4616
www.BFSEngr.com

BF&S Butler Fairman & Seufert CIVIL ENGINEERS

Branch Locations
FORT WAYNE 260-459-1532
LOUISVILLE 502-593-1996
LAFAYETTE 765-423-5602
MERRILLVILLE 219-769-2333
PLAINFIELD 317-839-3242

HORIZONTAL SCALE	BRIDGE FILE
AS NOTED	HAMILTON 207
VERTICAL SCALE	DESIGNATION
AS NOTED	
SURVEY BOOK	SHEET
ELECTRONIC	17 OF 59
CONTRACT	PROJECT
	PB-18-0001

BFS NO. 6369

H:\606300.0000\Pro Development\Design\Drawings\606.38724.dwg Donald Sheetz Plot:6/25/2018 1:36 PM Save:6/20/2018 3:17 PM

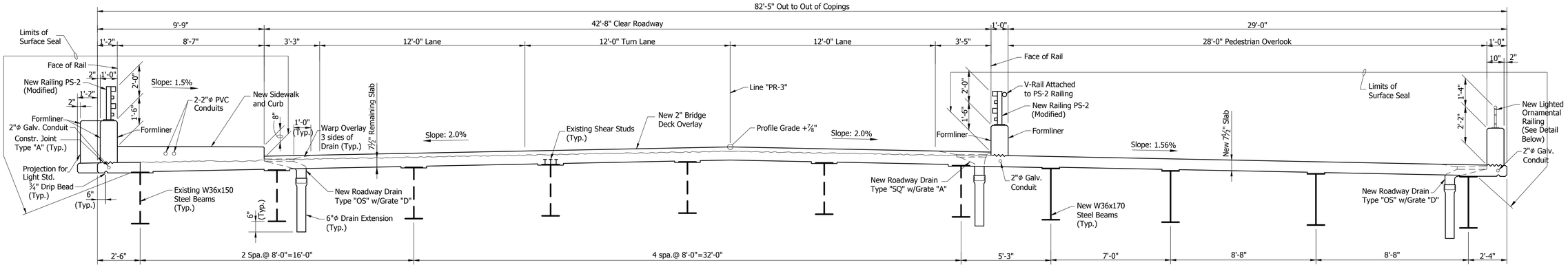

PROPOSED SECTION "B-B"
AT OVERLOOK
Scale: ⅜"=1'-0"

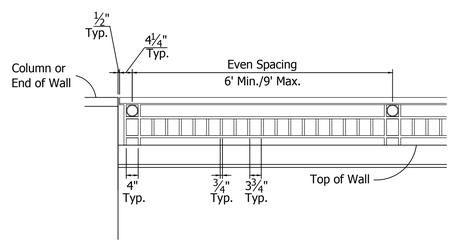

ELEVATION

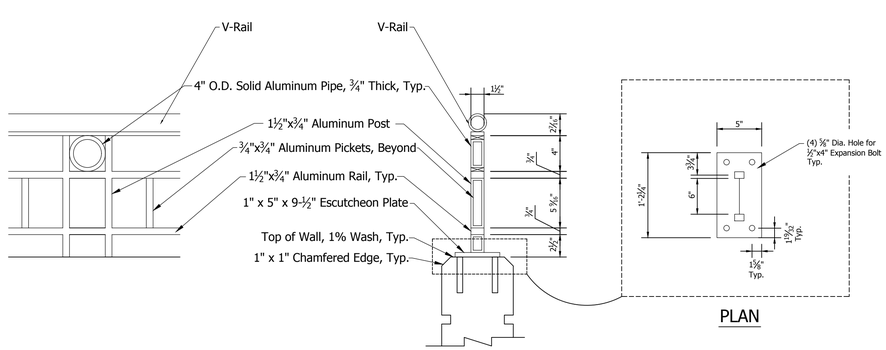

PLAN

ORNAMENTAL WALL RAILING DETAILS

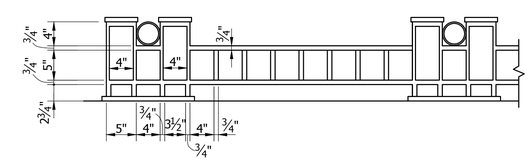

OVERLOOK SIDE RAILING DETAIL
Scale: 1"=1'-0"

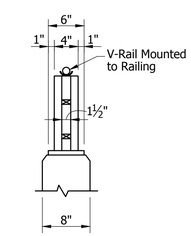

SECTION
Scale: 1"=1'-0"

GENERAL PLAN
PROPOSED STRUCTURE

NOTES
See Special Provisions for Rail Galvanizing Standards

BRYAN WRIGHT REGISTERED No. PE11100630 STATE OF INDIANA PROFESSIONAL ENGINEER

RECOMMENDED FOR APPROVAL: 4/24/2018
DESIGN ENGINEER DATE

DESIGNED: B. WRIGHT DRAWN: D. SHEETZ
CHECKED: M. EICHENAUER CHECKED: B. WRIGHT

BRIDGE NO.207
OVER WHITE RIVER
HAMILTON COUNTY

Headquarters
8450 WESTFIELD BLVD., SUITE 300
INDIANAPOLIS, IN. 46240-8302
TEL 317-713-4615
FAX 317-713-4616
www.BFSEngr.com

BF&S Butler Fairman & Seufert CIVIL ENGINEERS

Branch Locations
FORT WAYNE 260-459-1532
LOUISVILLE 502-593-1996
LAFAYETTE 765-423-5602
MERRILLVILLE 219-769-2333
PLAINFIELD 317-839-3242

HORIZONTAL SCALE	BRIDGE FILE
AS NOTED	HAMILTON 207
VERTICAL SCALE	DESIGNATION
AS NOTED	
SURVEY BOOK	SHEET
ELECTRONIC	18 OF 59
CONTRACT	PROJECT
	PB-18-0001

BFS NO. 6063

H:\606300.0000\ProDevelopment\Design\Drawings\606389225.dwg Donald Sheetz Plot:6/25/2018 1:36 PM Save:6/19/2018 6:53 AM

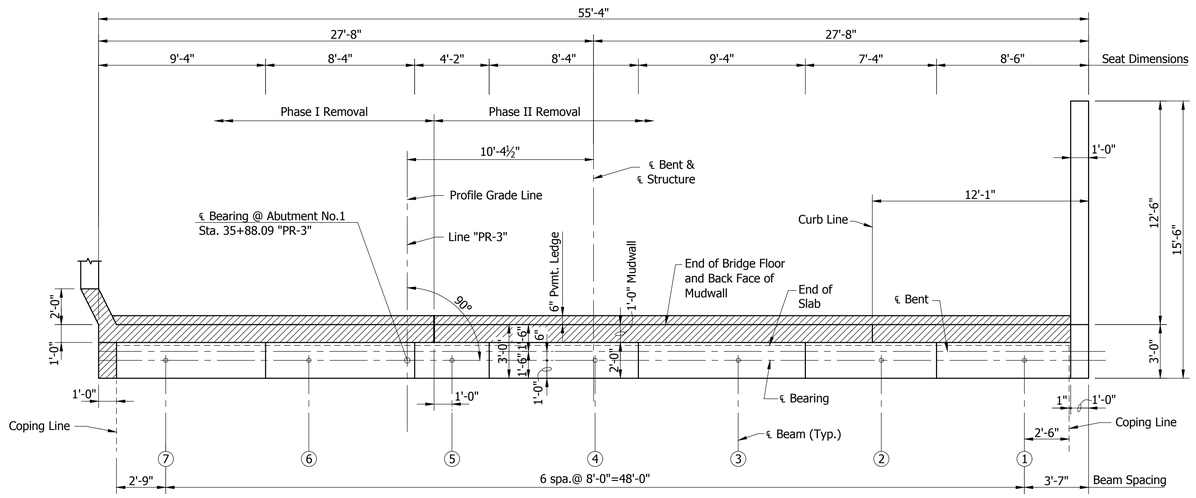

PLAN

Scale: ¼"=1'-0"

Note: Hatched Areas indicate portions to be Removed.

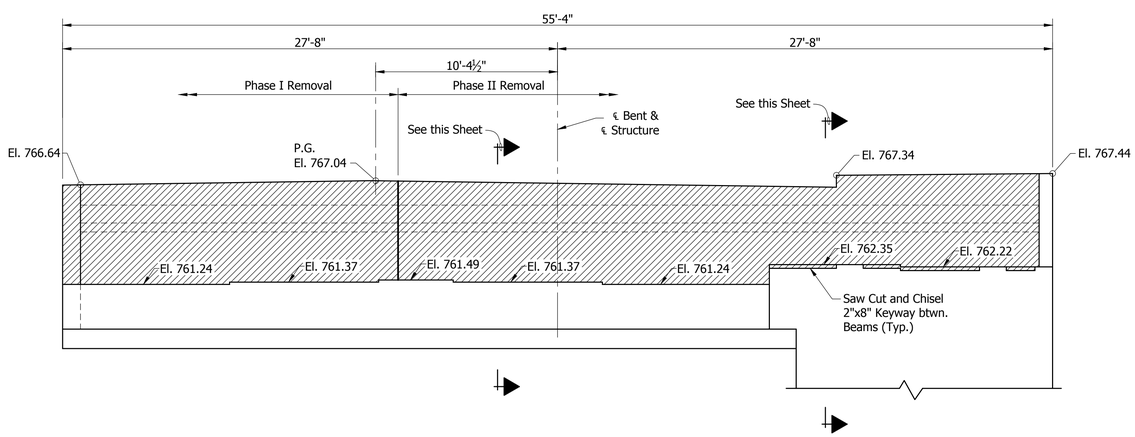

ELEVATION

Scale: ¼"=1'-0"

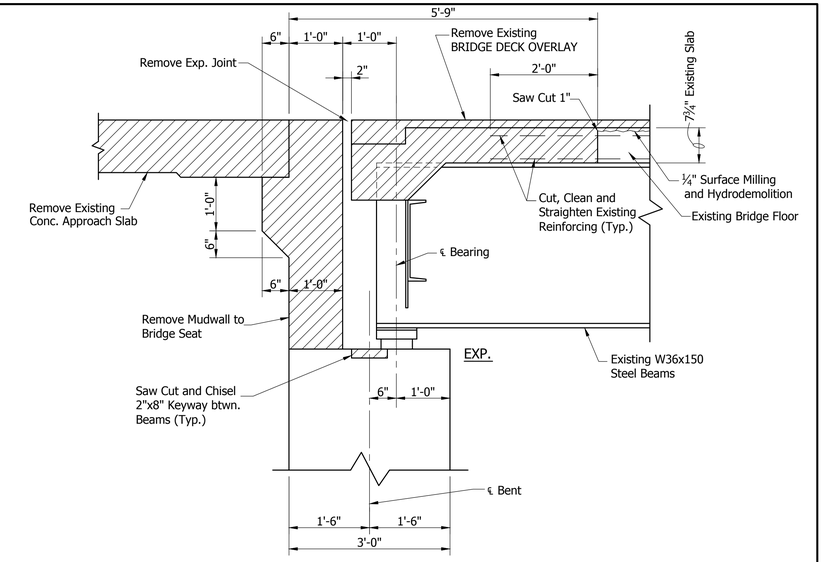

SECTION AT BEAMS ① AND ②
(SHOWING REMOVALS)

Scale: ¾"=1'-0"

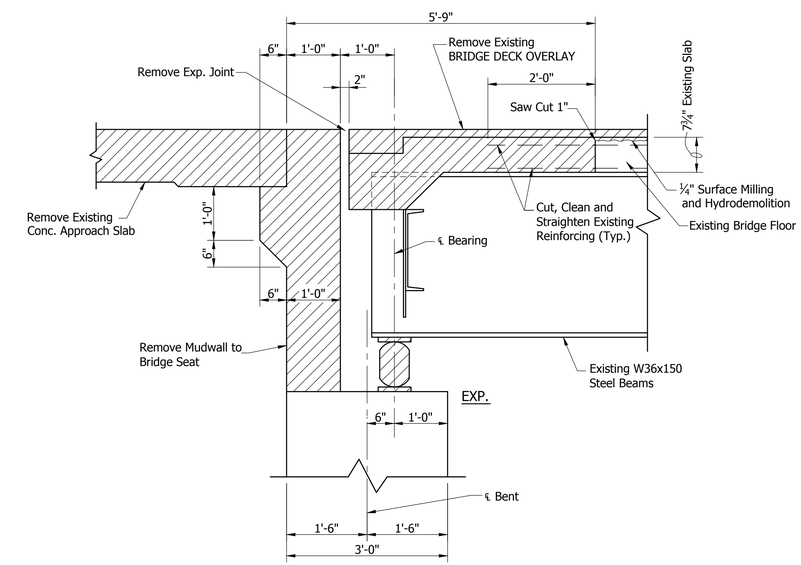

SECTION AT BEAMS ③ THRU ⑦
(SHOWING REMOVALS)

Scale: ¾"=1'-0"

BENT NO.1 DETAILS

BRYAN WRIGHT
REGISTERED
No. PE11100630
STATE OF INDIANA
PROFESSIONAL ENGINEER

RECOMMENDED FOR APPROVAL: _____ DESIGN ENGINEER 4/24/2018 DATE

DESIGNED: D. SHEETZ DRAWN: D. SHEETZ
CHECKED: B. WRIGHT CHECKED: B. WRIGHT

BRIDGE NO.207
OVER WHITE RIVER
HAMILTON COUNTY

Headquarters
8450 WESTFIELD BLVD., SUITE 300
INDIANAPOLIS, IN. 46240-8302
TEL 317-713-4615
FAX 317-713-4616
www.BFSEngr.com

Butler Fairman & Seufert
CIVIL REGISTERED

Branch Locations
FORT WAYNE 260-459-1532
LOUISVILLE 502-593-1996
LAFAYETTE 765-423-5602
MERRILLVILLE 219-769-2333
PLAINFIELD 317-839-3242

HORIZONTAL SCALE	BRIDGE FILE
AS NOTED	HAMILTON 207
VERTICAL SCALE	DESIGNATION
AS NOTED	6063
SURVEY BOOK	SHEET
ELECTRONIC	19 OF 59
CONTRACT	PROJECT
	PB-18-0001

BFS NO.

H:\606.300.0000\Pro_Development\Design\Drawings\606.39731.dwg Donald Sheetz Plot:6/25/2018 1:37 PM Save:4/18/2018 8:23 AM

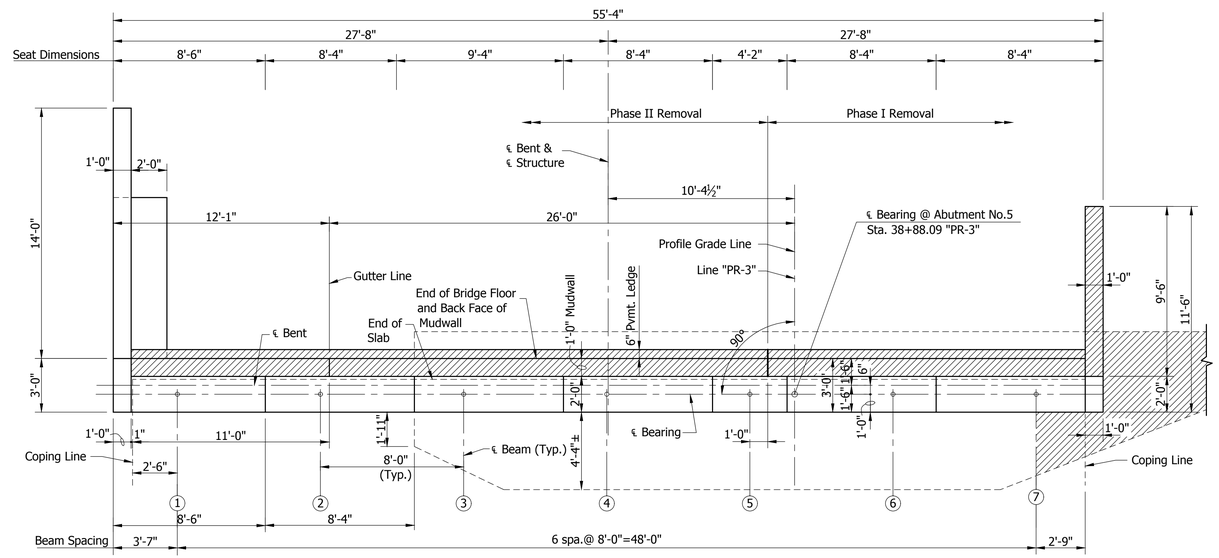

PLAN

Scale: ¼"=1'-0"

Note: Hatched Areas indicate portions to be Removed.

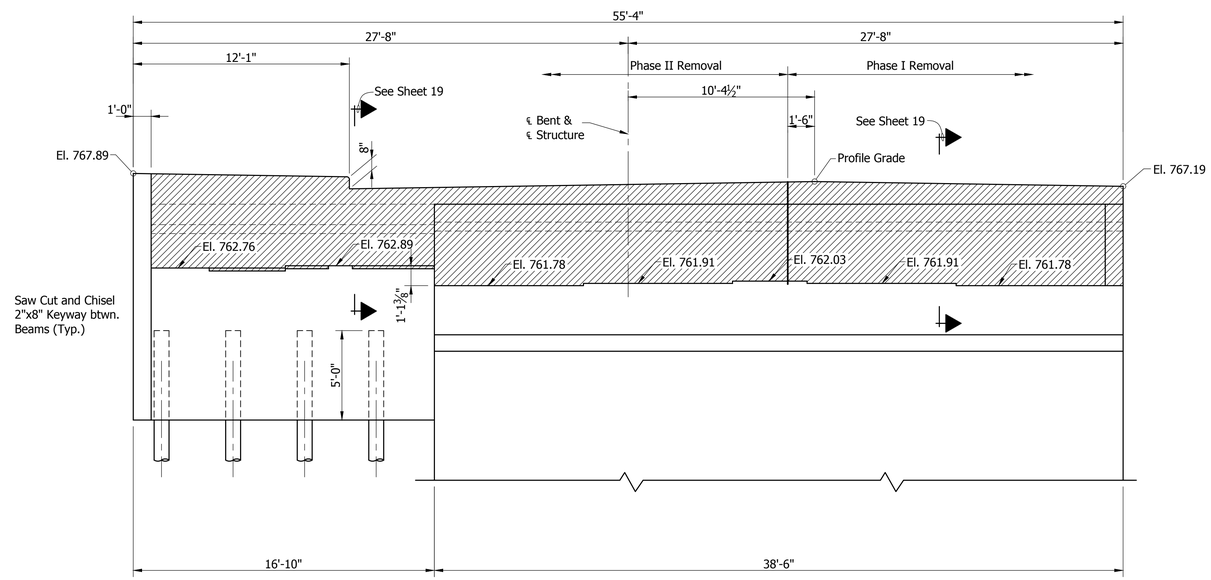

ELEVATION

Scale: ¼"=1'-0"

BENT NO.5 DETAILS

BRYAN WRIGHT REGISTERED No. PE11100630 STATE OF INDIANA PROFESSIONAL ENGINEER

RECOMMENDED FOR APPROVAL: _____ DESIGN ENGINEER 4/24/2018 DATE

DESIGNED: D. SHEETZ DRAWN: D. SHEETZ

CHECKED: B. WRIGHT CHECKED: B. WRIGHT

BRIDGE NO.207
OVER WHITE RIVER
HAMILTON COUNTY

Headquarters
8450 WESTFIELD BLVD., SUITE 300
INDIANAPOLIS, IN. 46240-8302
TEL 317-713-4615
FAX 317-713-4616
www.BFSEngr.com

Butler Fairman & Seufert
CIVIL ENGINEERS

Branch Locations
FORT WAYNE 260-459-1532
LOUISVILLE 502-593-1996
LAFAYETTE 765-423-5602
MERRILLVILLE 219-769-2333
PLAINFIELD 317-839-3242

HORIZONTAL SCALE	BRIDGE FILE
AS NOTED	HAMILTON 207
VERTICAL SCALE	DESIGNATION
AS NOTED	

SURVEY BOOK	SHEET		
ELECTRONIC	20	OF	59
CONTRACT	PROJECT		
	PB-18-0001		

BFS NO. 6063

H:\606.300.0000\Pro_Development\Design\Drawings\606.39732.dwg Donald Sheetz Plot:6/25/2018 1:37 PM Save:4/18/2018 8:23 AM

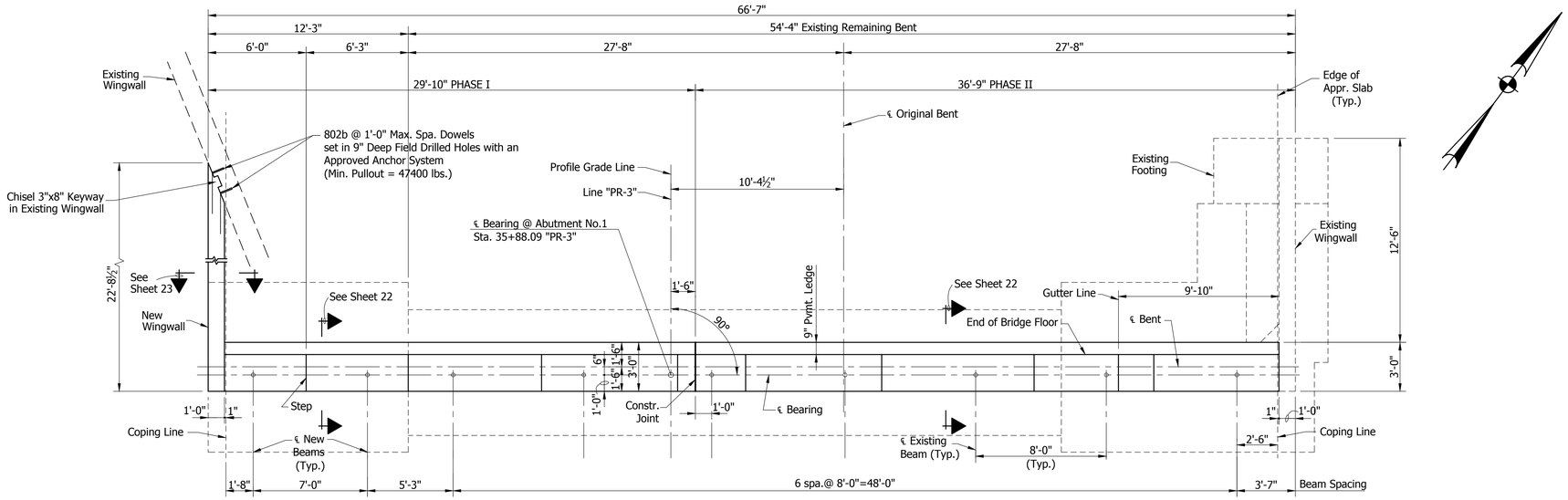

PLAN

Scale: ¼"=1'-0"

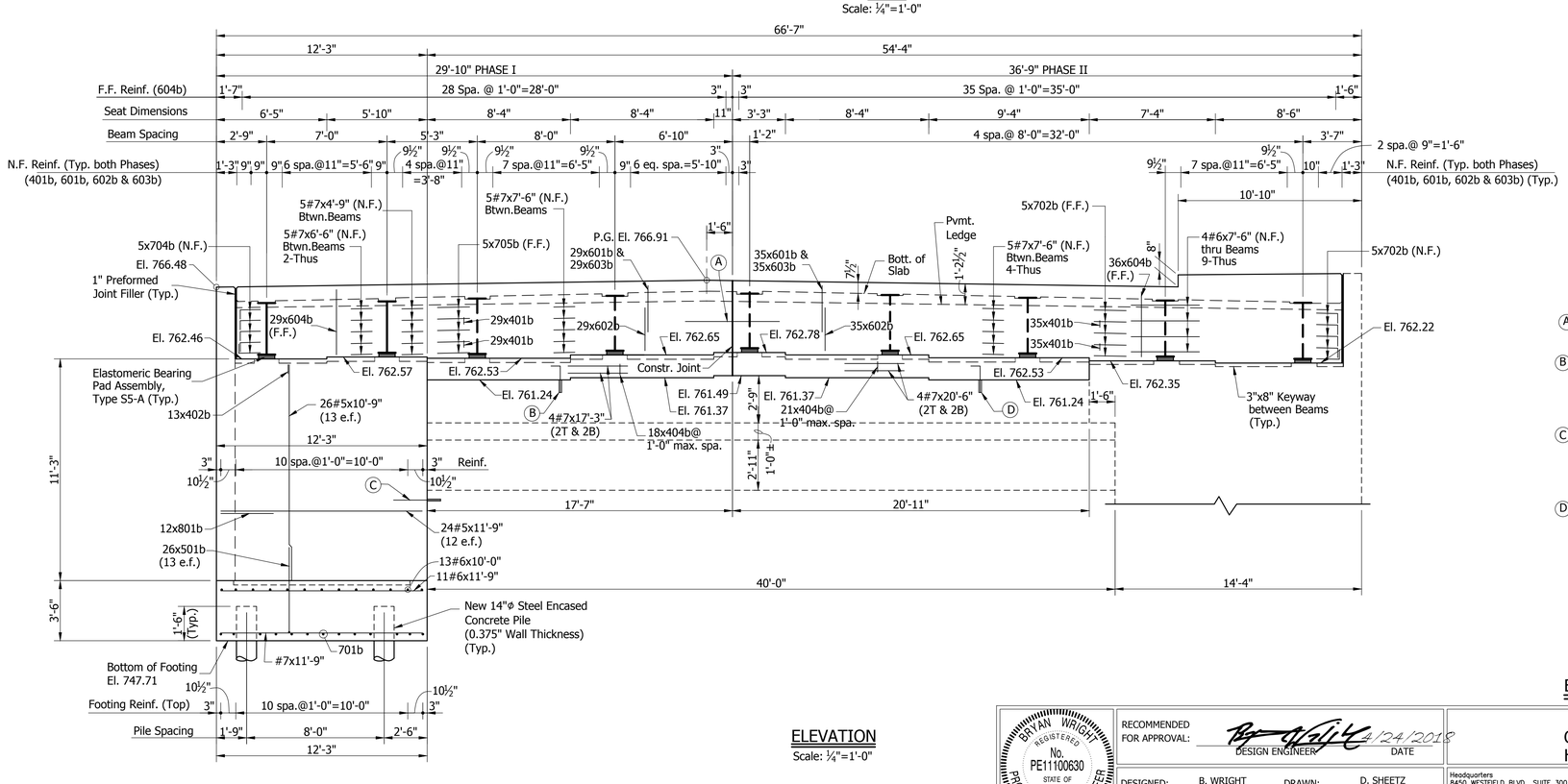

ELEVATION

Scale: ¼"=1'-0"

(A) 14 Threaded Tie Bar Assemblies (7 e.f.) (#7x3'-9" each way) (Epoxy Coated)

(B) 36x403b (18 e.f.) @ 1'-0" Max. Spa. Dowels set in 4½" Deep Field Drilled Holes with an Approved Anchor System (Min. Pullout = 12000 lbs.)

(C) 24#4x3'-0" (12 e.f.) Dowels set in 4½" Deep Field Drilled Holes with an Approved Anchor System (Min. Pullout = 12000 lbs.)

(D) 42x403b (21 e.f.) @ 1'-0" Max. Spa. Dowels set in 4½" Deep Field Drilled Holes with an Approved Anchor System (Min. Pullout = 12000 lbs.)

NOTE

See Sheet 24 for Footing Plan, Bar Bending Details and Bills of Materials.

BENT NO.1 DETAILS

BRYAN WRIGHT REGISTERED No. PE11100630 STATE OF INDIANA PROFESSIONAL ENGINEER

RECOMMENDED FOR APPROVAL: DESIGN ENGINEER 4/24/2018 DATE

DESIGNED: B. WRIGHT DRAWN: D. SHEETZ

CHECKED: C. OBRIEN CHECKED: B. WRIGHT

BRIDGE NO.207
OVER WHITE RIVER
HAMILTON COUNTY

Headquarters
8450 WESTFIELD BLVD., SUITE 300
INDIANAPOLIS, IN. 46240-8302
TEL 317-713-4615
FAX 317-713-4616
www.BFSEngr.com

Butler Fairman & Seufert CIVIL ENGINEERS

Branch Locations
FORT WAYNE 260-459-1532
LOUISVILLE 502-593-1996
LAFAYETTE 765-423-5602
MERRILLVILLE 219-769-2333
PLAINFIELD 317-839-3242

HORIZONTAL SCALE	BRIDGE FILE
AS NOTED	HAMILTON 207
VERTICAL SCALE	DESIGNATION
AS NOTED	

SURVEY BOOK	SHEET
ELECTRONIC	21 OF 59
CONTRACT	PROJECT
	PB-18-0001

BFS NO. 6063

H:\606300.0000\ProDevelopment\Design\Drawings\606387314.dwg Donald Sheetz Plot:6/25/2018 1:37 PM Saved:4/18/2018 8:23 AM

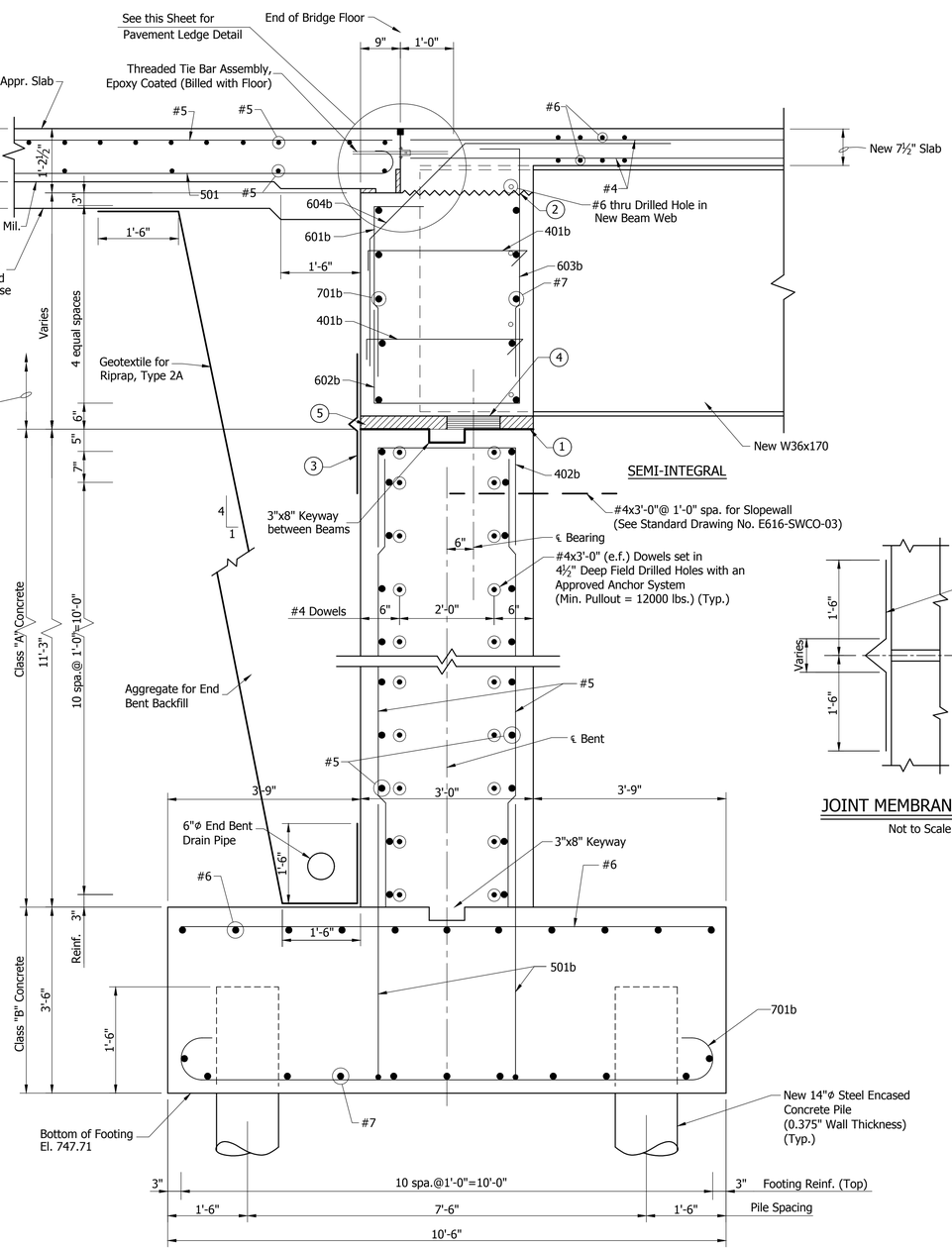

SECTION AT BENT NO.1
(SHOWING WIDENING RECONSTRUCTION)
Not to Scale

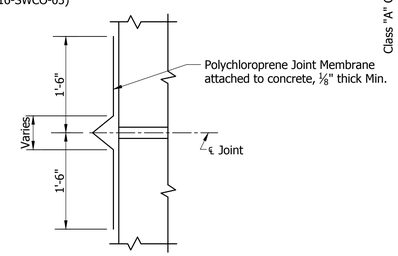

JOINT MEMBRANE DETAIL
Not to Scale

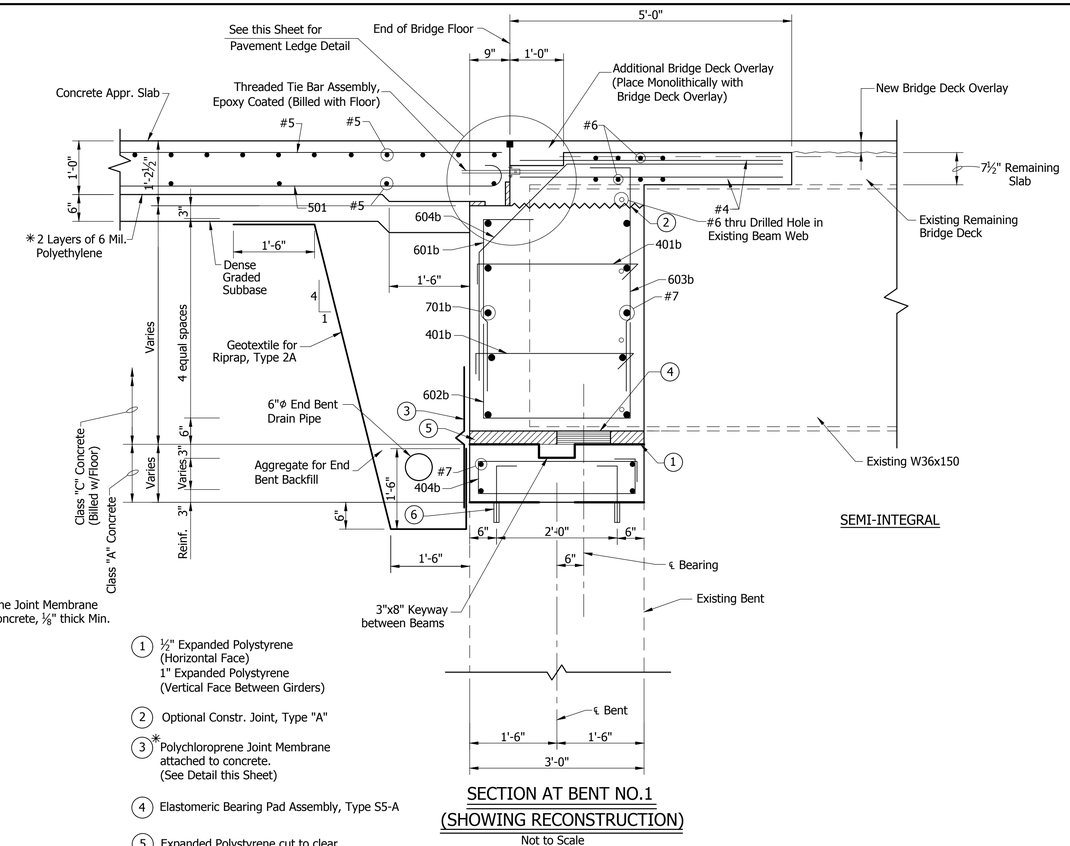

1. ½" Expanded Polystyrene (Horizontal Face) 1" Expanded Polystyrene (Vertical Face Between Girders)
2. Optional Constr. Joint, Type "A"
3. ✳ Polychloroprene Joint Membrane attached to concrete. (See Detail this Sheet)
4. Elastomeric Bearing Pad Assembly, Type S5-A
5. Expanded Polystyrene cut to clear Bearing Pad by ½".
6. 403b Dowels set in 4½" Deep Field Drilled Holes with an Approved Anchor System (Typ.) (Min. Pullout = 12000 Lbs.) (Typ.)

SECTION AT BENT NO.1
(SHOWING RECONSTRUCTION)
Not to Scale

✳ See Special Provisions

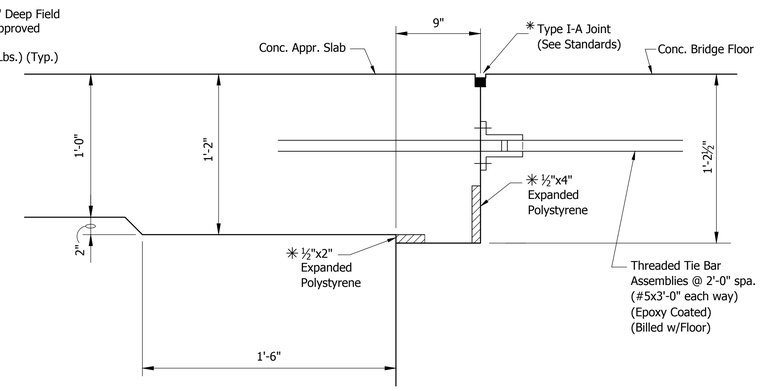

PAVEMENT LEDGE DETAIL
Not to Scale

BENT NO.1 DETAILS

BRYAN WRIGHT REGISTERED No. PE11100630 STATE OF INDIANA PROFESSIONAL ENGINEER

RECOMMENDED FOR APPROVAL: 4/24/2018
DESIGN ENGINEER DATE

DESIGNED: B. WRIGHT DRAWN: D. SHEETZ
CHECKED: C. OBRIEN CHECKED: B. WRIGHT

BRIDGE NO.207
OVER WHITE RIVER
HAMILTON COUNTY

Headquarters
8450 WESTFIELD BLVD., SUITE 300
INDIANAPOLIS, IN. 46240-8302
TEL 317-713-4615
FAX 317-713-4616
www.BFSEngr.com

Butler Fairman & Seufert CIVIL ENGINEERS

Branch Locations
FORT WAYNE 260-459-1532
LOUISVILLE 502-593-1996
LAFAYETTE 765-423-5602
MERRILLVILLE 219-769-2333
PLAINFIELD 317-839-3242

HORIZONTAL SCALE	BRIDGE FILE
AS NOTED	HAMILTON 207
VERTICAL SCALE	DESIGNATION
AS NOTED	
SURVEY BOOK	SHEET
ELECTRONIC	22 OF 59
CONTRACT	PROJECT
	PB-18-0001

BFS NO. 6063

H:\606300.0000\Proj.Development\Design\Drawings\606397314A.dwg Donald Sheetz Plot:6/25/2018 1:37 PM Save:4/18/2018 8:23 AM

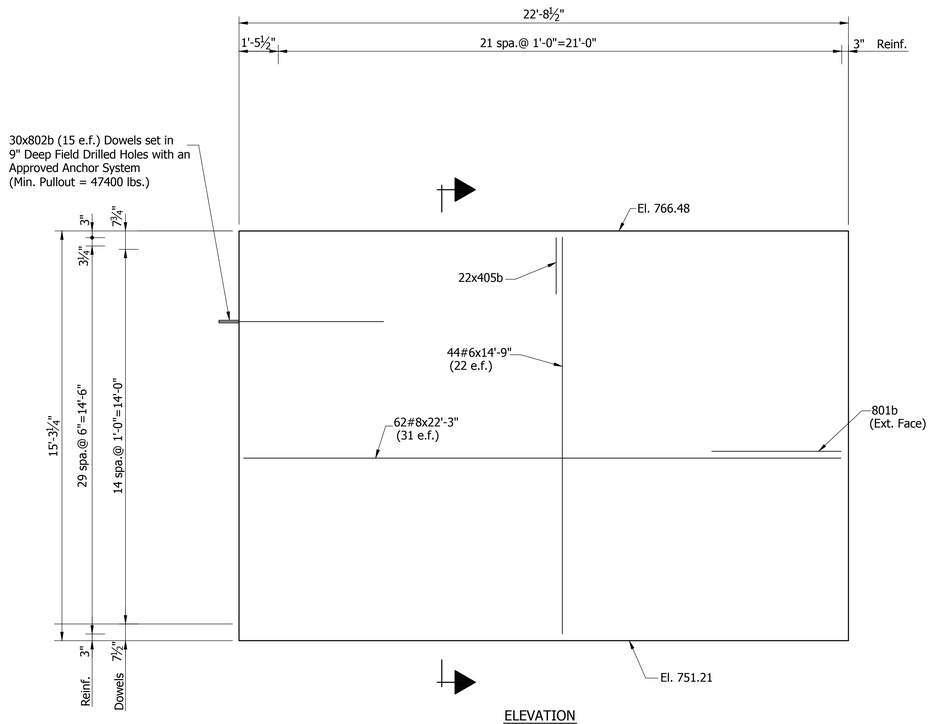

ELEVATION

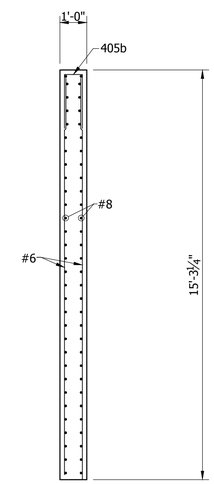

SECTION

WINGWALL DETAILS

Scale: ⅜"=1'-0"

NOTE

See Sheet 24 for Bar Bending Details and Bills of Materials.

BENT NO.1 DETAILS

BRYAN WRIGHT REGISTERED No. PE11100630 STATE OF INDIANA PROFESSIONAL ENGINEER

RECOMMENDED FOR APPROVAL: _____ DESIGN ENGINEER 4/24/2018 DATE

DESIGNED: B. WRIGHT DRAWN: D. SHEETZ

CHECKED: C. OBRIEN CHECKED: B. WRIGHT

BRIDGE NO.207
OVER WHITE RIVER
HAMILTON COUNTY

Headquarters
8450 WESTFIELD BLVD., SUITE 300
INDIANAPOLIS, IN. 46240-8302
TEL 317-713-4615
FAX 317-713-4616
www.BFSEngr.com

BF&S Butler Fairman & Seufert CIVIL ENGINEERS

Branch Locations
FORT WAYNE 260-459-1532
LOUISVILLE 502-593-1996
LAFAYETTE 765-423-5602
MERRILLVILLE 219-769-2333
PLAINFIELD 317-839-3242

HORIZONTAL SCALE	BRIDGE FILE
AS NOTED	HAMILTON 207
VERTICAL SCALE	DESIGNATION
AS NOTED	
SURVEY BOOK	SHEET
ELECTRONIC	23 OF 59
CONTRACT	PROJECT
	PB-18-0001

BFS NO. 6063

H:\606300.0000\ProDevelopment\Design\Drawings\606383AB.dwg Donald Sheetz Plot:6/25/2018 1:37 PM Save:4/18/2018 8:23 AM

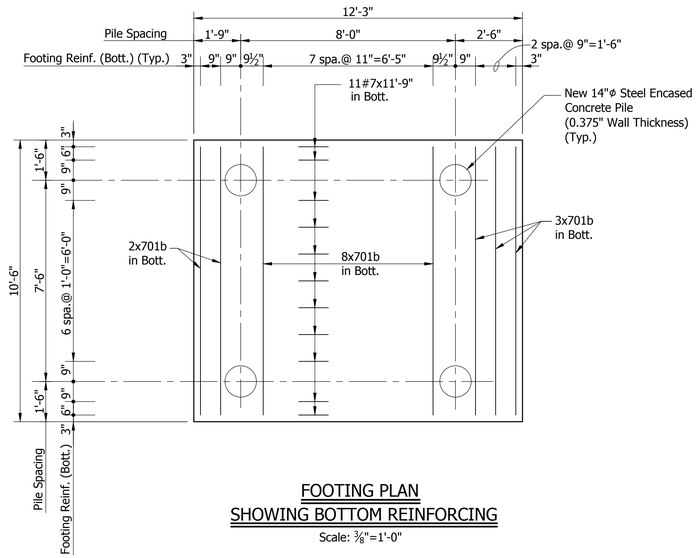

FOOTING PLAN
SHOWING BOTTOM REINFORCING

Scale: ⅜"=1'-0"

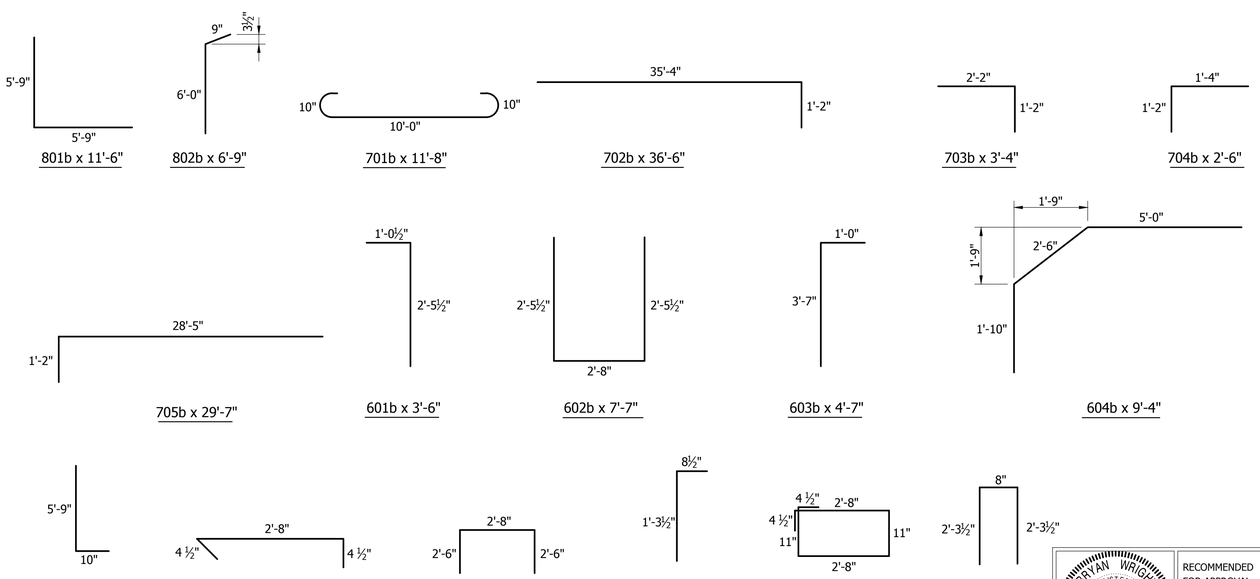

BAR BENDING DETAILS

Not to Scale

BILL OF MATERIALS
BENT NO.1
PHASE I

REINFORCING BARS			
Mark or Size	No. of Bars	Length (Ft.)	Weight (Lbs.)
801b	12	11'-6"	
802b	30	6'-9"	
#8	62	22'-3"	
Total #8 (Epoxy Coated)			4592
701b	13	11'-8"	
704b	5	2'-6"	
705b	5	29'-7"	
#7	4	17'-3"	
#7	11	11'-9"	
#7	5	7'-6"	
#7	10	6'-6"	
#7	5	4'-9"	
Total #7 (Epoxy Coated)			1301
601b	29	3'-6"	
602b	29	7'-7"	
603b	29	4'-7"	
604b	29	9'-4"	
#6	44	14'-9"	
#6	11	11'-9"	
#6	13	10'-0"	
#6	16	7'-6"	
Total #6 (Epoxy Coated)			2633
501b	26	6'-7"	
#5	26	10'-9"	
#5	24	11'-9"	
Total #5 (Epoxy Coated)			764
401b	58	3'-5"	
402b	13	7'-8"	
403b	36	2'-0"	
404b	18	7'-11"	
405b	22	5'-3"	
#4	37	3'-0"	
Total #4 (Epoxy Coated)			494
⊕ Total Steel (Epoxy Coated)			9784

CONCRETE	
Class "A" in Substructure	27 Cys.
Class "B" in Footing	16.7 Cys.

MISCELLANEOUS	
Aggregate for End Bent Backfill	26 Cys.
Geotextile for Riprap, Type 2A	45 Sys.
Threaded Tie Bar Assemblies	
(#7x3'-9" ea. way) (Epoxy Coated)	14 Each
Field Drilled Holes in Concrete	90 Each
Bearing Assembly Elastomeric	2 Each
Foundation, Excavation Unclassified	93.8 Cys.
3-14"Φ Steel Encased Concrete Piles	
(0.375" Wall Thickness) @ 80' Each	240 Lft.
Test Pile, Dynamic, Production	
1 @ 90' Ea.	90 Lft.
Dynamic Pile Load Test	1 Ea.
Test Pile, Dynamic, Restrike	1 Ea.
Conical Pile Shoe, 14 IN	4 Each

BENT NO.1 DETAILS

BILL OF MATERIALS
BENT NO.1
PHASE II

REINFORCING BARS			
Mark or Size	No. of Bars	Length (Ft.)	Weight (Lbs.)
702b	5	36'-6"	
703b	5	3'-4"	
#7	4	20'-6"	
#7	20	7'-6"	
Total #7 (Epoxy Coated)			881
601b	35	3'-6"	
602b	35	7'-7"	
603b	35	4'-7"	
604b	36	9'-4"	
#6	20	7'-6"	
Total #6 (Epoxy Coated)			1554
401b	70	3'-5"	
403b	42	2'-0"	
404b	21	7'-11"	
Total #4 (Epoxy Coated)			327
⊕ Total Steel (Epoxy Coated)			2762

CONCRETE	
Class "A" in Substructure	
Seats	5.5 Cys.

MISCELLANEOUS	
Aggregate for End Bent Backfill	12 Cys.
Geotextile for Riprap, Type 2A	39 Sys.
Field Drilled Holes in Concrete	42 Each
Bearing Assembly Elastomeric	3 Each
Foundation, Excavation Unclassified	16.7 Cys.

⊕ A.S.T.M. A615, Grade 60

BRYAN WRIGHT
REGISTERED
No. PE11100630
STATE OF INDIANA
PROFESSIONAL ENGINEER

RECOMMENDED FOR APPROVAL: DESIGN ENGINEER 4/24/2018 DATE

DESIGNED: B. WRIGHT DRAWN: D. SHEETZ
CHECKED: C. OBRIEN CHECKED: B. WRIGHT

BRIDGE NO.207
OVER WHITE RIVER
HAMILTON COUNTY

Headquarters
8450 WESTFIELD BLVD., SUITE 300
INDIANAPOLIS, IN. 46240-8302
TEL 317-713-4615
FAX 317-713-4616
www.BFSEngr.com

Butler Fairman & Seufert
CIVIL ENGINEERS

Branch Locations
FORT WAYNE 260-459-1532
LOUISVILLE 502-593-1996
LAFAYETTE 765-423-5602
MERRILLVILLE 219-769-2333
PLAINFIELD 317-839-3242

HORIZONTAL SCALE	BRIDGE FILE
AS NOTED	HAMILTON 207
VERTICAL SCALE	DESIGNATION
AS NOTED	

SURVEY BOOK	SHEET		
ELECTRONIC	24	OF	59
CONTRACT	PROJECT		
	PB-18-0001		

BFS NO. 6063

H:\606300.0000\ProDevelopment\Design\Drawings\606387318.dwg Donald Sheetz Plot:6/25/2018 1:37 PM Saved:6/20/2018 2:52 PM

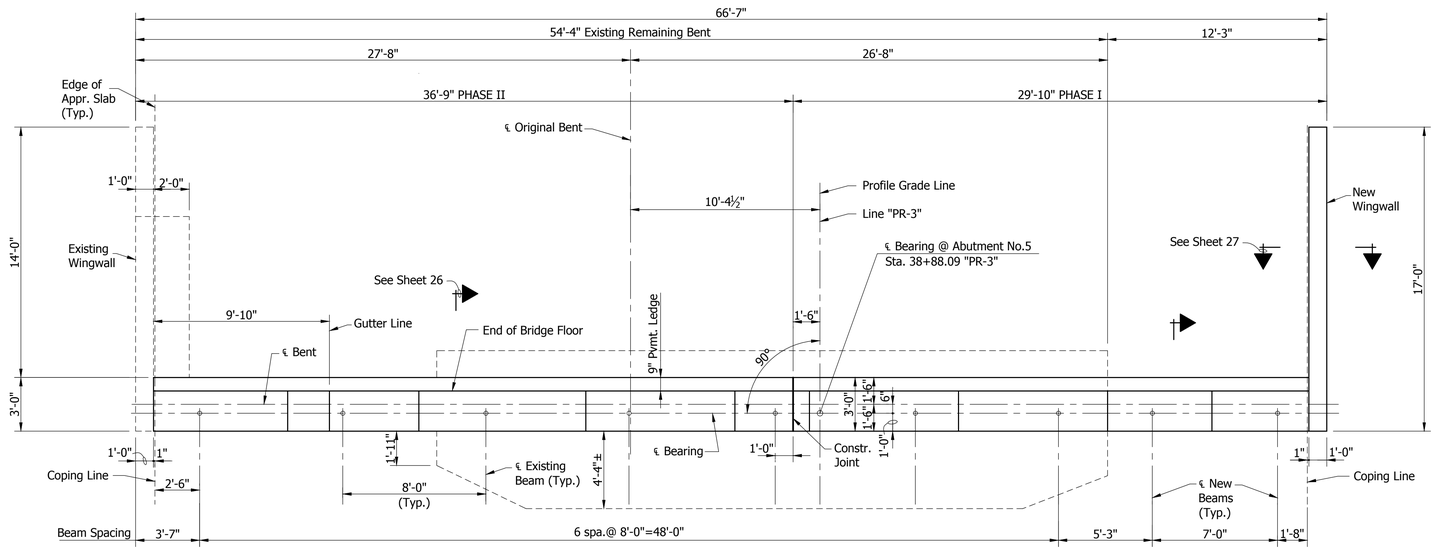

PLAN

Scale: ¼"=1'-0"

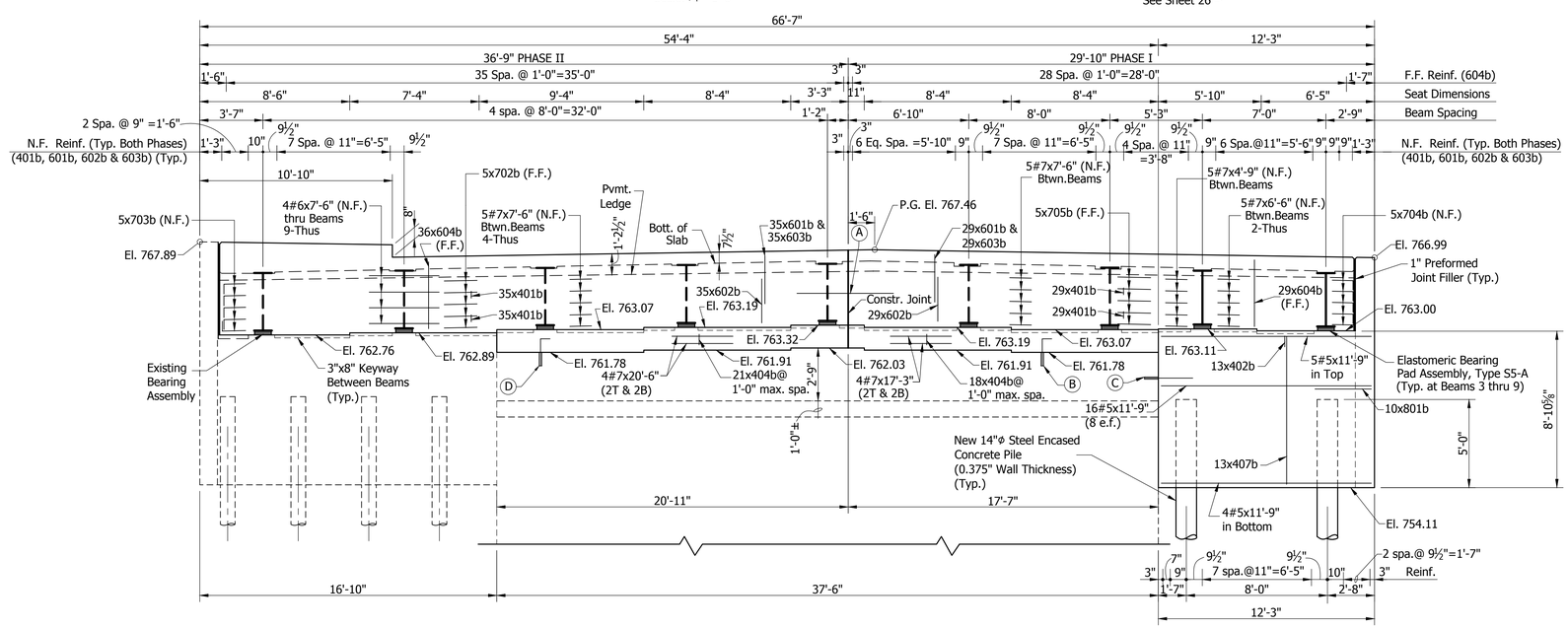

ELEVATION

Scale: ¼"=1'-0"

Ⓐ 14 Threaded Tie Bar Assemblies (7 e.f.) (#7x3'-9" each way) (Epoxy Coated)

Ⓑ 36x403b (18 e.f.) @ 1'-0" Max. Spa. Dowels set in 4½" Deep Field Drilled Holes with an Approved Anchor System (Min. Pullout = 12000 lbs.)

Ⓒ 20#4x3'-0" (10 e.f.) Dowels set in 4½" Deep Field Drilled Holes with an Approved Anchor System (Min. Pullout = 12000 lbs.)

Ⓓ 42x403b (21 e.f.) @ 1'-0" Max. Spa. Dowels set in 4½" Deep Field Drilled Holes with an Approved Anchor System (Min. Pullout = 12000 lbs.)

NOTE

See Sheet 28 for Bar Bending Details and Bills of Materials.

BENT NO.5 DETAILS

BRYAN WRIGHT REGISTERED No. PE11100630 STATE OF INDIANA PROFESSIONAL ENGINEER

RECOMMENDED FOR APPROVAL: DESIGN ENGINEER — DATE 4/24/2018

DESIGNED: B. WRIGHT DRAWN: D. SHEETZ

CHECKED: C. OBRIEN CHECKED: B. WRIGHT

BRIDGE NO.207
OVER WHITE RIVER
HAMILTON COUNTY

Headquarters
8450 WESTFIELD BLVD., SUITE 300
INDIANAPOLIS, IN. 46240-8302
TEL 317-713-4615
FAX 317-713-4616
www.BFSEngr.com

Butler Fairman & Seufert CIVIL ENGINEERS

Branch Locations
FORT WAYNE 260-459-1532
LOUISVILLE 502-593-1996
LAFAYETTE 765-423-5602
MERRILLVILLE 219-769-2333
PLAINFIELD 317-839-3242

HORIZONTAL SCALE	BRIDGE FILE
AS NOTED	HAMILTON 207
VERTICAL SCALE	DESIGNATION
AS NOTED	6063

SURVEY BOOK	SHEET		
ELECTRONIC	25	OF	59
CONTRACT	PROJECT		
	PB-18-0001		

BFS NO.

H:\606.300.0000\Proj.Development\Design\Drawings\606.39733.dwg Donald Sheetz Plot:6/25/2018 1:37 PM Save:4/18/2018 11:03 AM

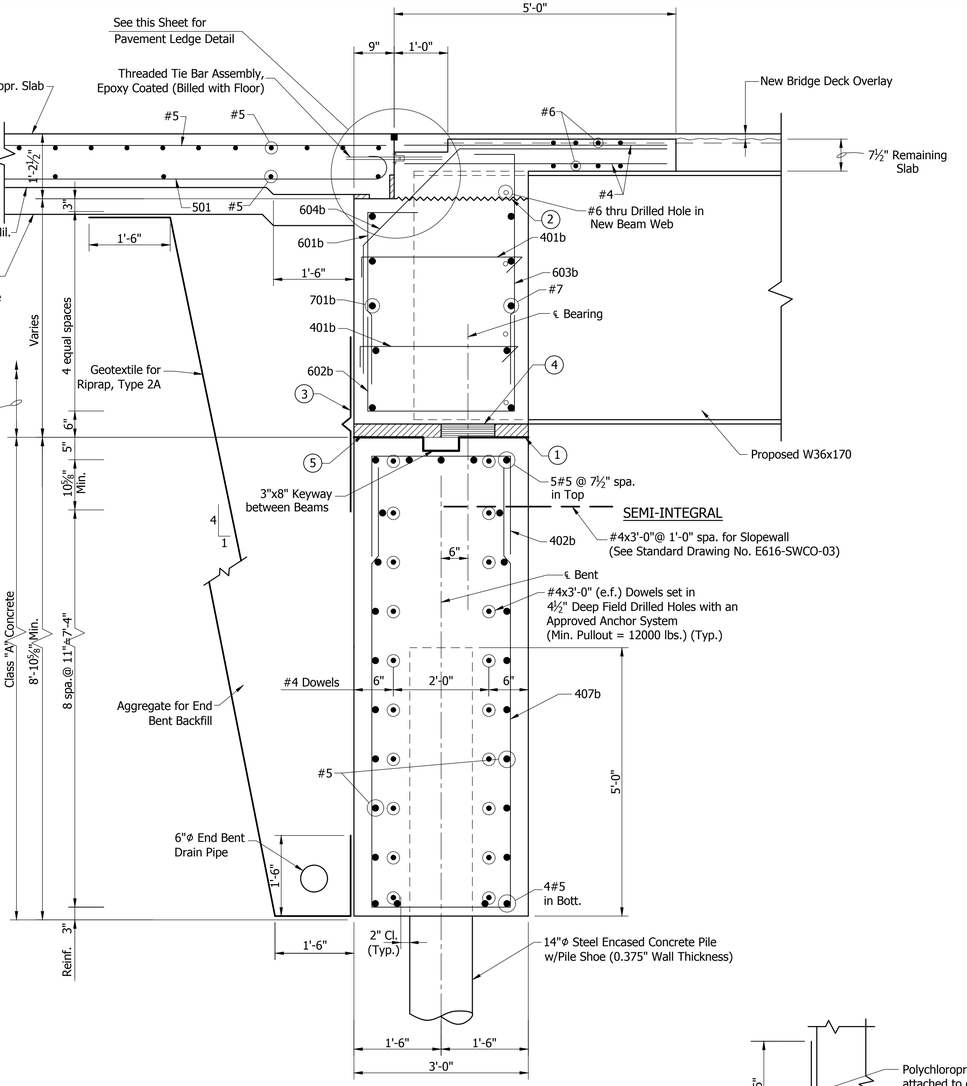

SECTION AT BENT NO.5
(SHOWING WIDENING RECONSTRUCTION)
Not to Scale

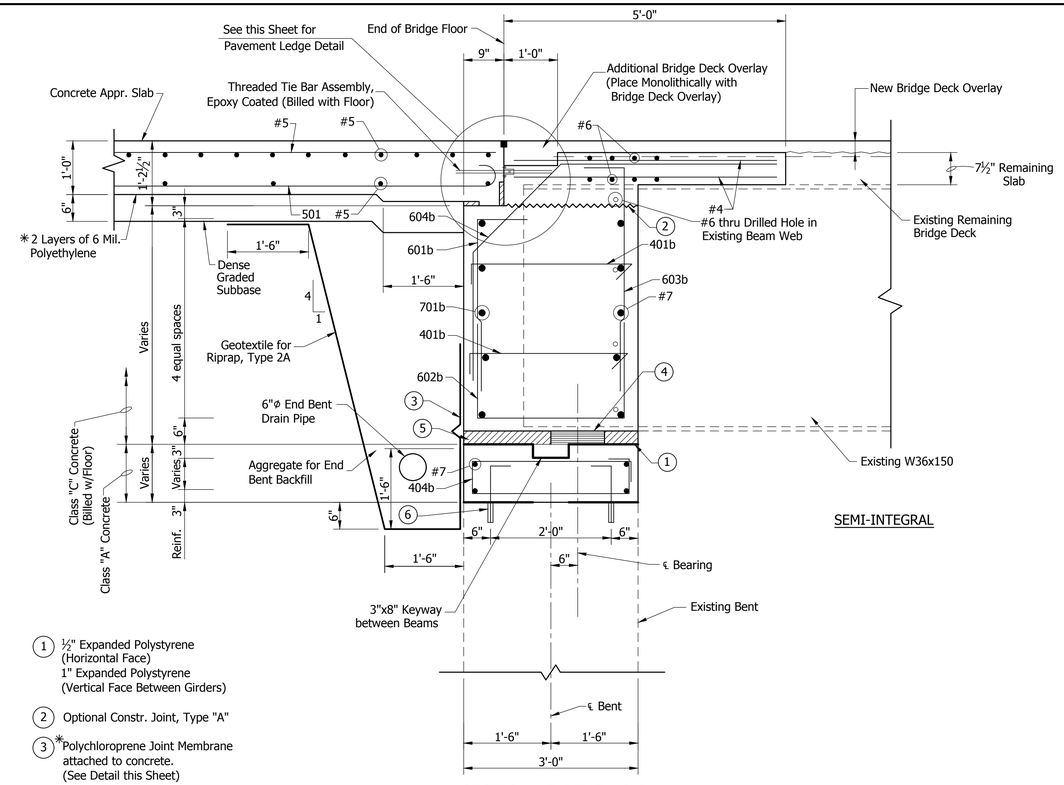

SECTION AT BENT NO.5
(SHOWING RECONSTRUCTION)
Not to Scale

1. ½" Expanded Polystyrene (Horizontal Face) 1" Expanded Polystyrene (Vertical Face Between Girders)
2. Optional Constr. Joint, Type "A"
3. ✳Polychloroprene Joint Membrane attached to concrete. (See Detail this Sheet)
4. Elastomeric Bearing Pad Assembly, Type S5-A
5. Expanded Polystyrene cut to clear Bearing Pad by ½".
6. 403b Dowels set in 4½" Deep Field Drilled Holes with an Approved

✳ See Special Provisions

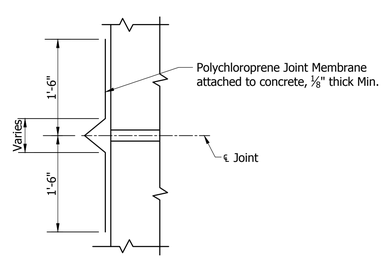

JOINT MEMBRANE DETAIL
Not to Scale

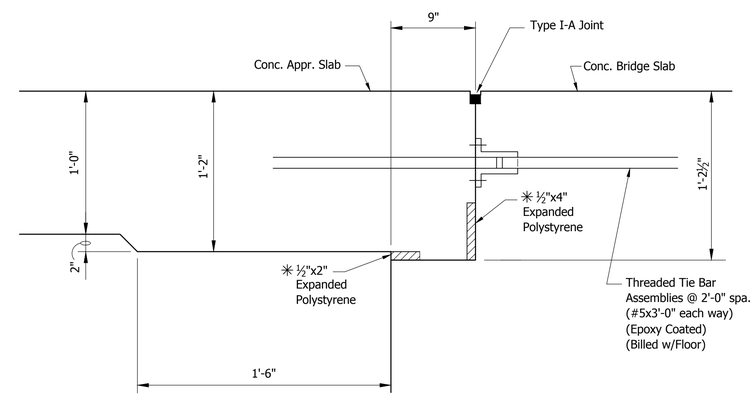

PAVEMENT LEDGE DETAIL
Not to Scale

BENT NO.5 DETAILS

BRYAN WRIGHT
REGISTERED
No. PE11100630
STATE OF INDIANA
PROFESSIONAL ENGINEER

RECOMMENDED FOR APPROVAL: _____ DESIGN ENGINEER 4/24/2018 DATE

DESIGNED: B. WRIGHT DRAWN: D. SHEETZ
CHECKED: C. OBRIEN CHECKED: B. WRIGHT

BRIDGE NO.207
OVER WHITE RIVER
HAMILTON COUNTY

Headquarters
8450 WESTFIELD BLVD., SUITE 300
INDIANAPOLIS, IN. 46240-8302
TEL 317-713-4615
FAX 317-713-4616
www.BFSEngr.com

BF&S Butler Fairman & Seufert
CIVIL ENGINEERS

Branch Locations
FORT WAYNE 260-459-1532
LOUISVILLE 502-593-1996
LAFAYETTE 765-423-5602
MERRILLVILLE 219-769-2333
PLAINFIELD 317-839-3242

HORIZONTAL SCALE	BRIDGE FILE
AS NOTED	HAMILTON 207
VERTICAL SCALE	DESIGNATION
AS NOTED	

SURVEY BOOK	SHEET		
ELECTRONIC	26	OF	59
CONTRACT	PROJECT		
	PB-18-0001		

BFS NO. 6063

H:\606300.0000\ProjDevelopment\Design\Drawings\606387S4.dwg Donald Sheetz Plot:6/25/2018 1:37 PM Saved:4/18/2018 8:23 AM

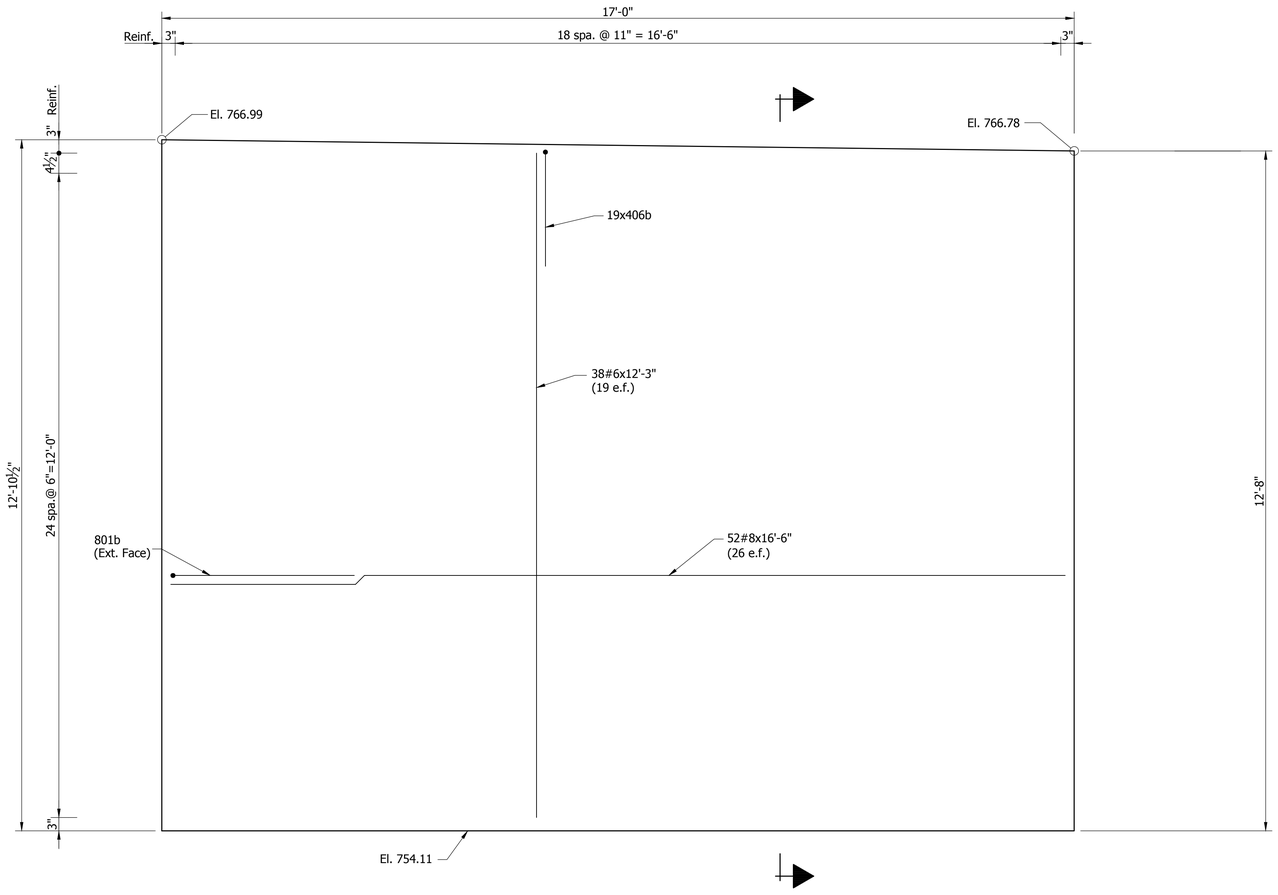

ELEVATION

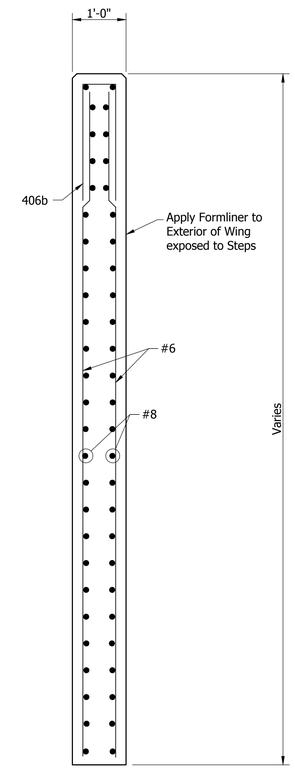

SECTION

WINGWALL DETAILS

Scale: ⅜"=1'-0"

NOTE
See Sheet 28 for Bar Bending Details and Bill of Materials.

BENT NO.5 DETAILS

BRYAN WRIGHT
REGISTERED
No. PE11100630
STATE OF INDIANA
PROFESSIONAL ENGINEER

RECOMMENDED FOR APPROVAL: _____ DESIGN ENGINEER 4/24/2018 DATE

DESIGNED: B. WRIGHT DRAWN: D. SHEETZ

CHECKED: C. OBRIEN CHECKED: B. WRIGHT

BRIDGE NO.207
OVER WHITE RIVER
HAMILTON COUNTY

Headquarters
8450 WESTFIELD BLVD., SUITE 300
INDIANAPOLIS, IN. 46240-8302
TEL 317-713-4615
FAX 317-713-4616
www.BFSEngr.com

BF&S
Butler Fairman & Seufert
CIVIL ENGINEERS

Branch Locations
FORT WAYNE 260-459-1532
LOUISVILLE 502-593-1996
LAFAYETTE 765-423-5602
MERRILLVILLE 219-769-2333
PLAINFIELD 317-839-3242

HORIZONTAL SCALE	BRIDGE FILE
AS NOTED	HAMILTON 207
VERTICAL SCALE	DESIGNATION
AS NOTED	

SURVEY BOOK	SHEET		
ELECTRONIC	27	OF	59
CONTRACT	PROJECT		
	PB-18-0001		

BFS NO. 6063

H:\606300.0000\ProDevelopment\Design\Drawings\606397344.dwg Donald Sheetz Plot:6/25/2018 1:37 PM Save:4/18/2018 8:23 AM

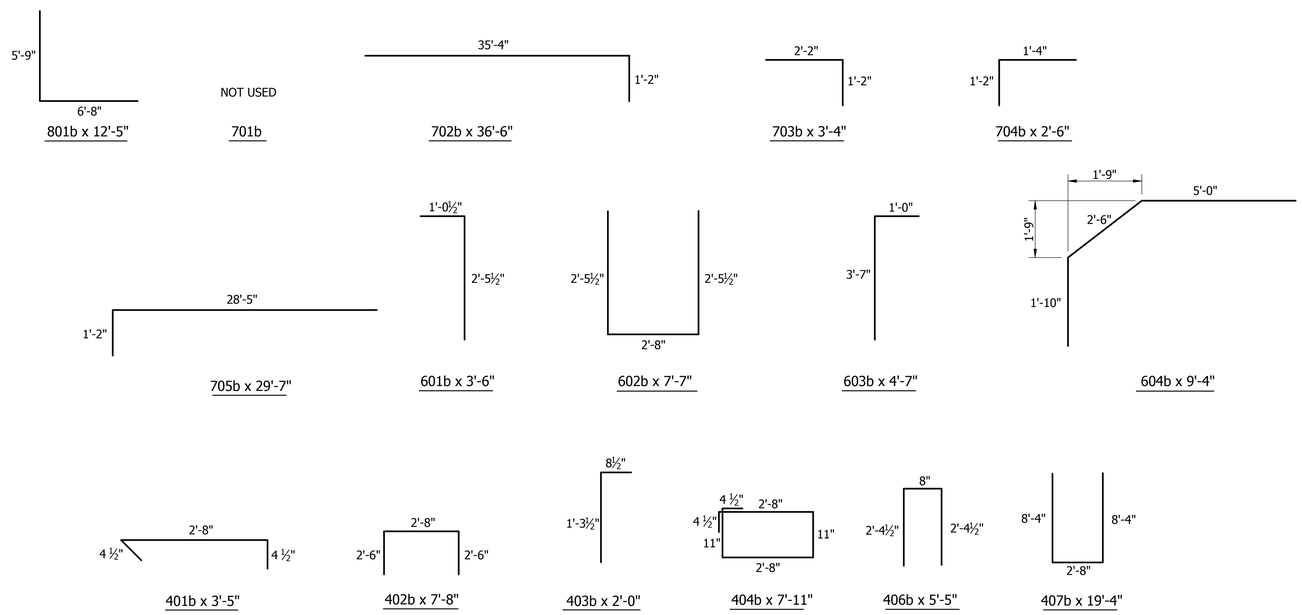

BAR BENDING DETAILS

Not to Scale

BILL OF MATERIALS
BENT NO.5
PHASE I

REINFORCING BARS

Mark or Size	No. of Bars	Length (Ft.)	Weight (Lbs.)
801b	10	12'-5"	
#8	52	16'-6"	
Total #8 (Epoxy Coated)			2622
704b	5	2'-6"	
705b	5	29'-7"	
#7	4	17'-3"	
#7	5	7'-6"	
#7	10	6'-6"	
#7	5	4'-9"	
Total #7 (Epoxy Coated)			727
601b	29	3'-6"	
602b	29	7'-7"	
603b	29	4'-7"	
604b	29	9'-4"	
#6	38	12'-3"	
#6	16	7'-6"	
Total #6 (Epoxy Coated)			1968
#5	25	11'-9"	
Total #5 (Epoxy Coated)			306
401b	58	3'-5"	
402b	13	7'-8"	
403b	36	2'-0"	
404b	18	7'-11"	
406b	19	5'-5"	
407b	13	19'-4"	
#4	33	3'-0"	
Total #4 (Epoxy Coated)			645
Total Steel (Epoxy Coated)			6268

CONCRETE

Class "A" in Substructure	19.1 Cys.
Slopewall Concrete, 6"	26 Sys.

MISCELLANEOUS

Aggregate for End Bent Backfill	14.8 Cys.
Geotextile for Riprap, Type 2A	21 Sys.
Threaded Tie Bar Assemblies	
(#7x3'-9" ea. way) (Epoxy Coated)	14 Each
Field Drilled Holes in Concrete	56 Each
Bearing Assembly Elastomeric	2 Each
Foundation, Excavation Unclassified	66.1 Cys.
2-14"Φ Steel Encased Concrete Piles	
(0.375" Wall Thickness) @ 90' Each	180 Lft.
Conical Pile Shoe, 14 IN	2 Each

BILL OF MATERIALS
BENT NO.5
PHASE II

REINFORCING BARS

Mark or Size	No. of Bars	Length (Ft.)	Weight (Lbs.)
702b	5	36'-6"	
703b	5	3'-4"	
#7	4	20'-6"	
#7	20	7'-6"	
Total #7 (Epoxy Coated)			881
601b	35	3'-6"	
602b	35	7'-7"	
603b	35	4'-7"	
604b	36	9'-4"	
#6	20	7'-6"	
Total #6 (Epoxy Coated)			1554
401b	70	3'-5"	
403b	42	2'-0"	
404b	21	7'-11"	
Total #4 (Epoxy Coated)			327
Total Steel (Epoxy Coated)			2762

CONCRETE

Class "A" in Substructure	5.5 Cys.

MISCELLANEOUS

Aggregate for End Bent Backfill	18.2 Cys.
Geotextile for Riprap, Type 2A	60 Sys.
Field Drilled Holes in Concrete	42 Each
Bearing Assembly Elastomeric	3 Each
Foundation, Excavation Unclassified	12.9 Cys.

A.S.T.M. A615, Grade 60

BENT NO.5 DETAILS

BRYAN WRIGHT REGISTERED No. PE11100630 STATE OF INDIANA PROFESSIONAL ENGINEER

RECOMMENDED FOR APPROVAL: DESIGN ENGINEER 4/24/2018 DATE

DESIGNED: C. OBRIEN DRAWN: D. SHEETZ

CHECKED: B. WRIGHT CHECKED: B. WRIGHT

BRIDGE NO.207
OVER WHITE RIVER
HAMILTON COUNTY

Headquarters
8450 WESTFIELD BLVD., SUITE 300
INDIANAPOLIS, IN. 46240-8302
TEL 317-713-4615
FAX 317-713-4616
www.BFSEngr.com

Butler Fairman & Seufert CIVIL ENGINEERS

Branch Locations
FORT WAYNE 260-459-1532
LOUISVILLE 502-593-1996
LAFAYETTE 765-423-5602
MERRILLVILLE 219-769-2333
PLAINFIELD 317-839-3242

HORIZONTAL SCALE	BRIDGE FILE		
AS NOTED	HAMILTON 207		
VERTICAL SCALE	DESIGNATION		
AS NOTED			
SURVEY BOOK	SHEET		
ELECTRONIC	28	OF	59
CONTRACT	PROJECT		
	PB-18-0001		

BFS NO. 6063

H:\606300.0000\ProDevelopment\Design\Drawings\606397S3A.dwg Donald Sheetz Plot:6/25/2018 1:37 PM Save:6/20/2018 2:54 PM

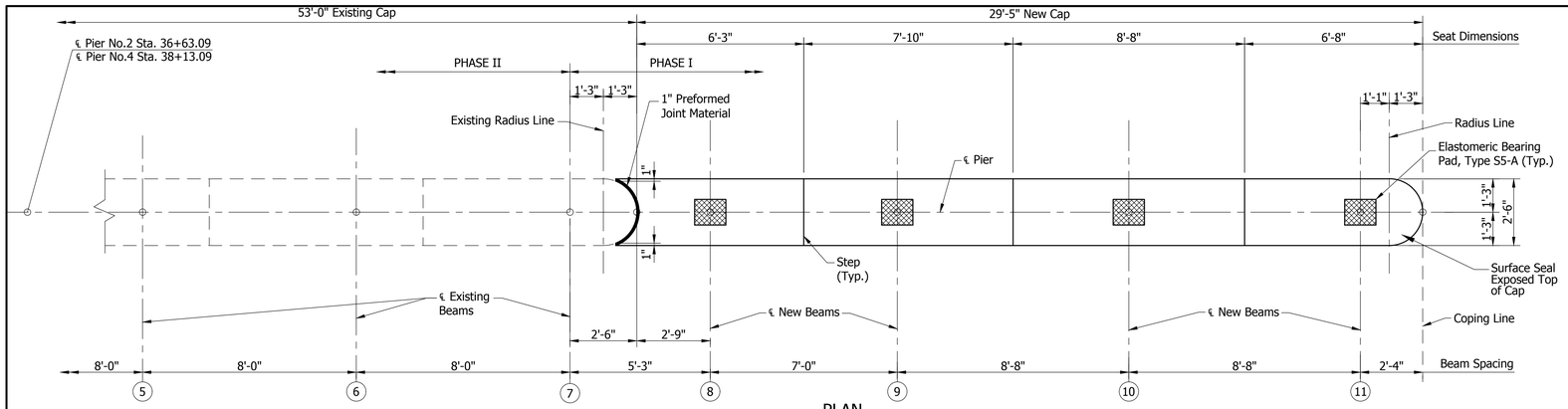

PLAN

Scale: ⅜"=1'-0"

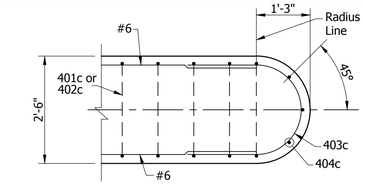

PLAN-SECTION CAP NOSE

Not to Scale

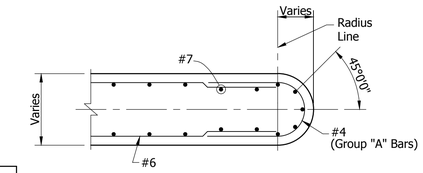

PLAN-SECTION STEM NOSE

Scale: ½"=1'-0"

SEAT ELEVATIONS				
Beam No.	8	9	10	11
Pier No.2	763.62	763.51	763.37	763.24
Pier No.4	763.89	763.78	763.64	763.51

Note: Hatched Area indicates portions to be Removed.

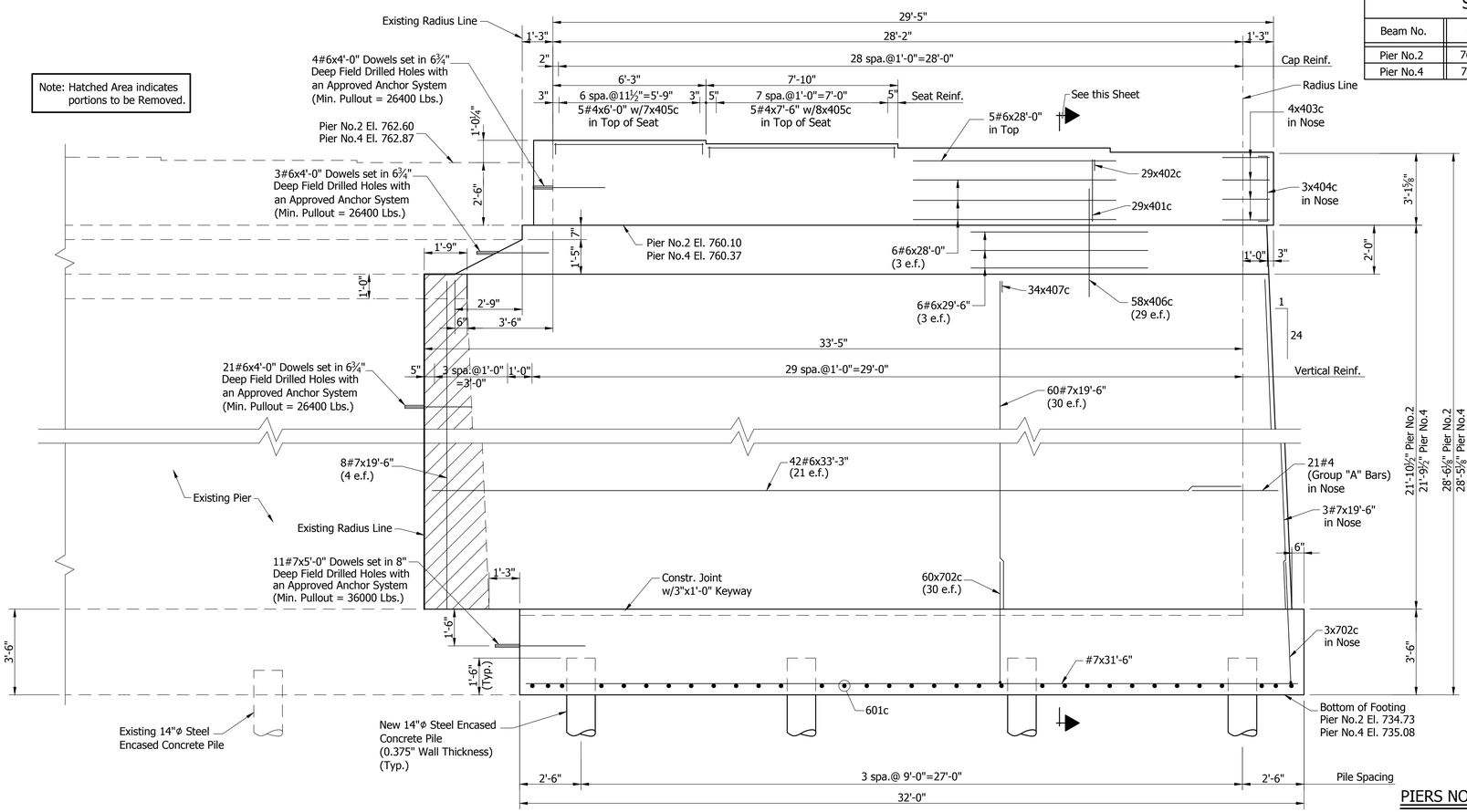

ELEVATION

Scale: ⅜"=1'-0"

NOTE

See Sheet 31 for Footing Details, Bar Bending Details and Bill of Materials.

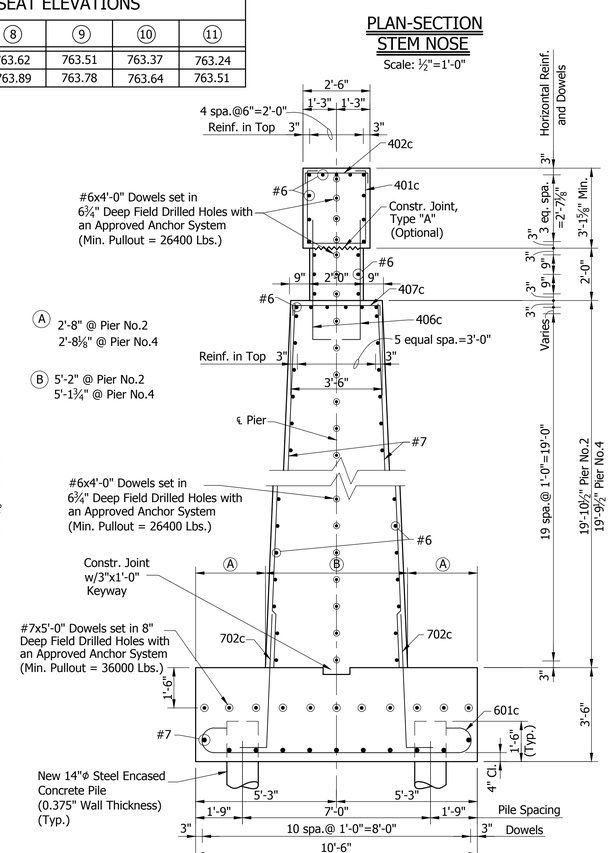

PIERS NO.2 AND NO.4 DETAILS

SECTION

Scale: ⅜"=1'-0"

BRYAN WRIGHT REGISTERED No. PE11100630 STATE OF INDIANA PROFESSIONAL ENGINEER

RECOMMENDED FOR APPROVAL: 4/24/2018
DESIGN ENGINEER — DATE

DESIGNED: B. WRIGHT DRAWN: D. SHEETZ
CHECKED: C. OBRIEN CHECKED: B. WRIGHT

BRIDGE NO.207 OVER WHITE RIVER HAMILTON COUNTY

Headquarters
8450 WESTFIELD BLVD., SUITE 300
INDIANAPOLIS, IN. 46240-8302
TEL 317-713-4615
FAX 317-713-4616
www.BFSEngr.com

Butler Fairman & Seufert CIVIL ENGINEERS

Branch Locations
FORT WAYNE 260-459-1532
LOUISVILLE 502-593-1996
LAFAYETTE 765-423-5602
MERRILLVILLE 219-769-2333
PLAINFIELD 317-839-3242

HORIZONTAL SCALE	BRIDGE FILE
AS NOTED	HAMILTON 207
VERTICAL SCALE	DESIGNATION
AS NOTED	
SURVEY BOOK	SHEET
ELECTRONIC	29 OF 59
CONTRACT	PROJECT
	PB-18-0001

BFS NO. 6063

H:\606300.0000\ProDevelopment\Design\Drawings\606.38741.dwg Donald Sheetz Plot:6/25/2018 1:37 PM Save:6/19/2018 6:37 AM

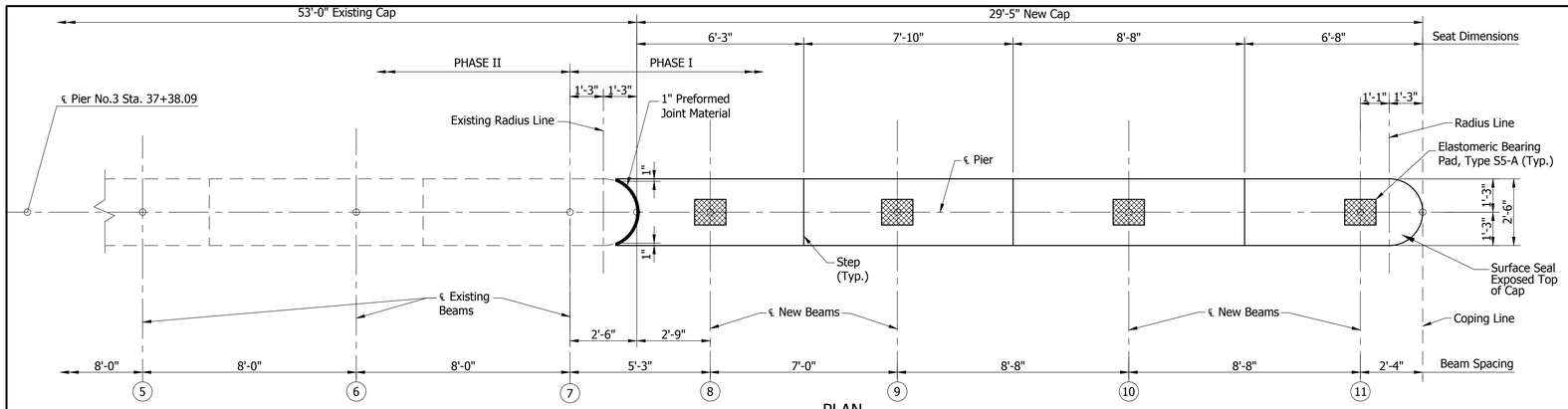

PLAN

Scale: ⅜"=1'-0"

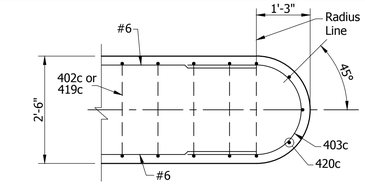

PLAN-SECTION CAP NOSE

Not to Scale

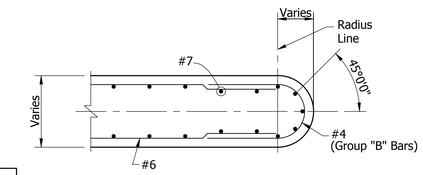

PLAN-SECTION STEM NOSE

Scale: ½"=1'-0"

SEAT ELEVATIONS				
Beam No.	8	9	10	11
Pier No.3	763.87	763.77	763.63	763.50

Note: Hatched Area indicates portions to be Removed.

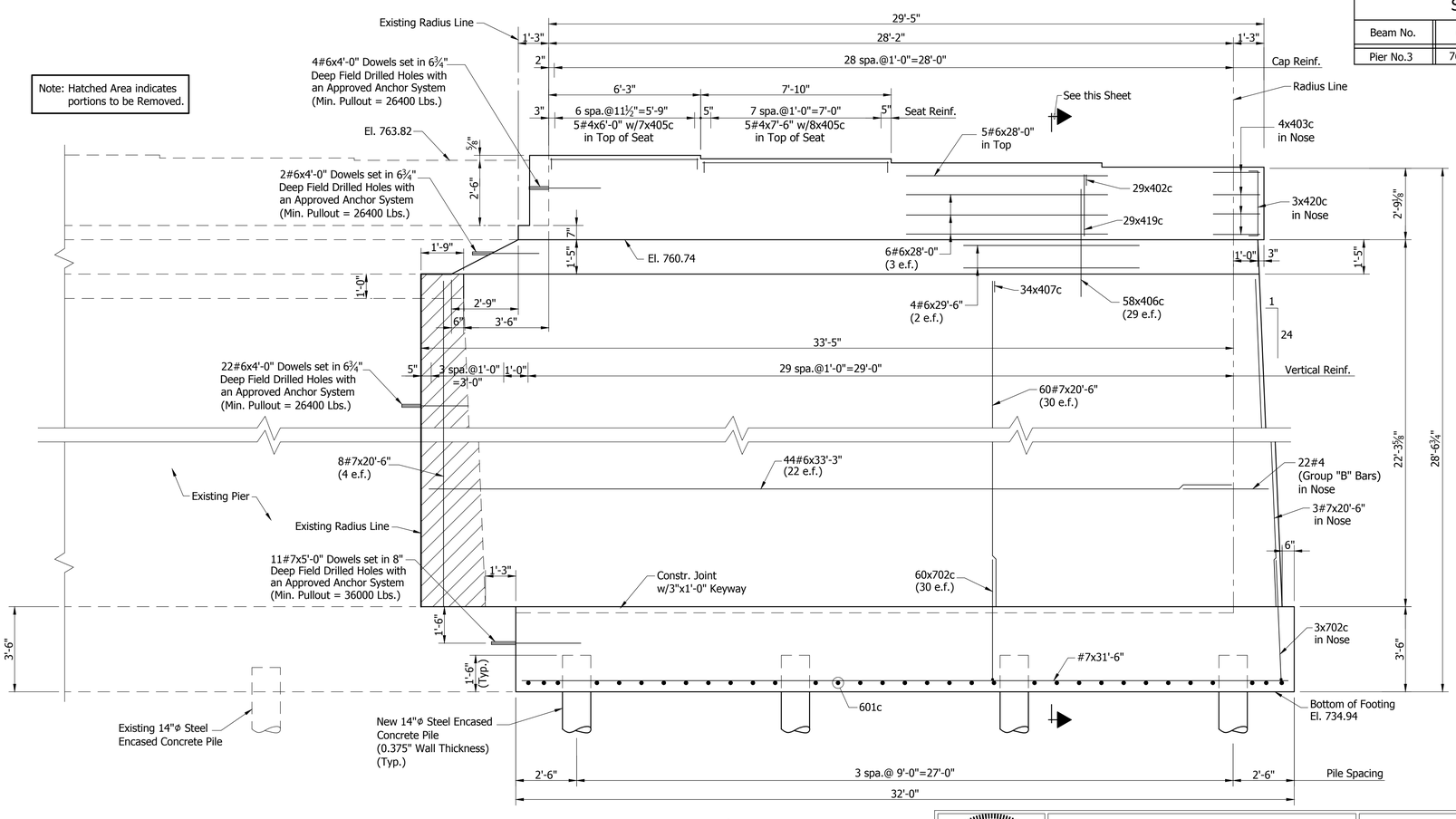

ELEVATION

Scale: ⅜"=1'-0"

NOTE

See Sheet 31 for Footing Details, Bar Bending Details and Bill of Materials.

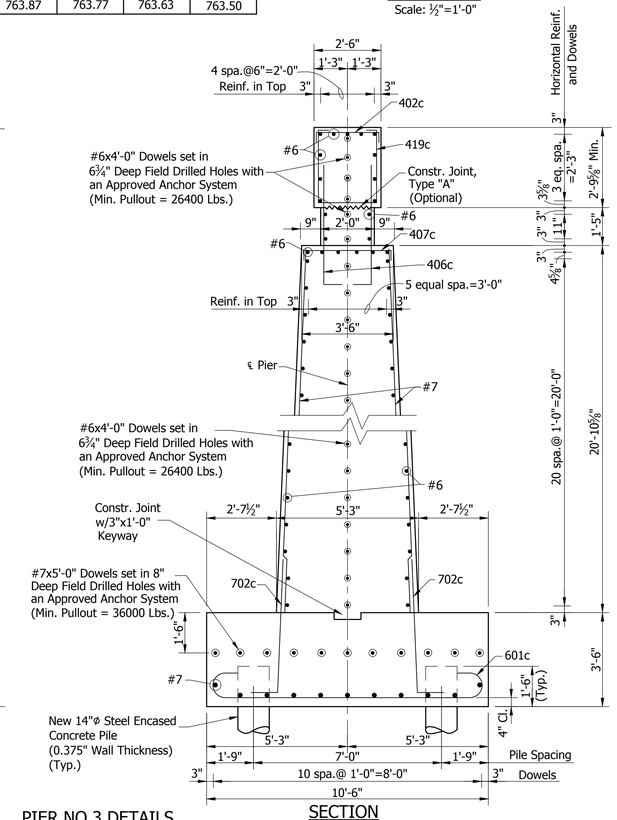

PIER NO.3 DETAILS

SECTION

Scale: ⅜"=1'-0"

BRYAN WRIGHT REGISTERED No. PE11100630 STATE OF INDIANA PROFESSIONAL ENGINEER

RECOMMENDED FOR APPROVAL: DESIGN ENGINEER 4/24/2018 DATE

DESIGNED: B. WRIGHT DRAWN: D. SHEETZ

CHECKED: C. OBRIEN CHECKED: B. WRIGHT

BRIDGE NO.207
OVER WHITE RIVER
HAMILTON COUNTY

Headquarters
8450 WESTFIELD BLVD., SUITE 300
INDIANAPOLIS, IN. 46240-8302
TEL 317-713-4615
FAX 317-713-4616
www.BFSEngr.com

Branch Locations
FORT WAYNE 260-459-1532
LOUISVILLE 502-593-1996
LAFAYETTE 765-423-5602
MERRILLVILLE 219-769-2333
PLAINFIELD 317-839-3242

BF&S Butler Fairman & Seufert CIVIL ENGINEERS

HORIZONTAL SCALE	BRIDGE FILE
AS NOTED	HAMILTON 207
VERTICAL SCALE	DESIGNATION
AS NOTED	
SURVEY BOOK	SHEET
ELECTRONIC	30 OF 59
CONTRACT	PROJECT
	PB-18-0001

BFS NO. 6063

H:\606300.0000\ProDevelopment\Design\Drawings\606387A2.dwg Donald Sheetz Plot:6/25/2018 1:37 PM Saved:4/18/2018 8:27 AM

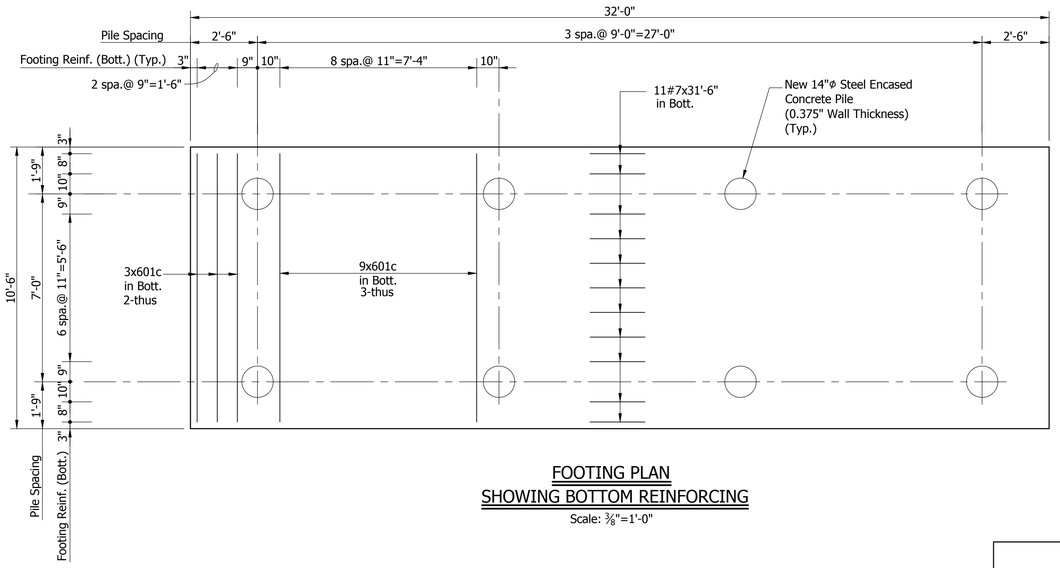

FOOTING PLAN
SHOWING BOTTOM REINFORCING

Scale: ⅜"=1'-0"

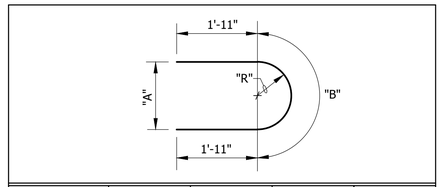

Mark	A	B	R	Length
408c	3'-2"	5'-0"	1'-7"	8'-10"
409c	3'-3½"	5'-2"	1'-7¾"	9'-0"
410c	3'-5½"	5'-5"	1'-8¾"	9'-3"
411c	3'-7½"	5'-8"	1'-9¾"	9'-6"
412c	3'-9½"	5'-11"	1'-10¾"	9'-9"
413c	3'-11½"	6'-2"	1'-11¾"	10'-0"
414c	4'-1½"	6'-6"	2'-0¾"	10'-4"
415c	4'-3½"	6'-9"	2'-1¾"	10'-7"
416c	4'-5½"	7'-0"	2'-2¾"	10'-10"
417c	4'-7½"	7'-3"	2'-3¾"	11'-1"
418c	4'-9½"	7'-6"	2'-4¾"	11'-4"

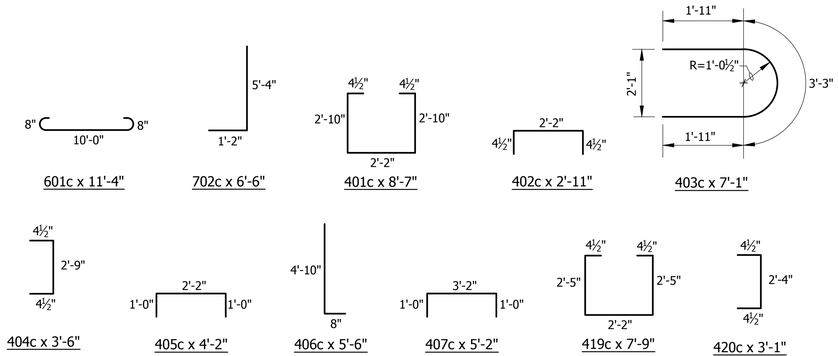

BAR BENDING DETAILS

Not to Scale

Group "A" 21#4 in Nose
2x408c
2x409c
2x410c
2x411c
2x412c
2x413c
2x414c
2x415c
2x416c
2x417c
1x418c
209.67 Lft.

Group "B" 22#4 in Nose
2x408c
2x409c
2x410c
2x411c
2x412c
2x413c
2x414c
2x415c
2x416c
2x417c
2x418c
221.00 Lft.

BILL OF MATERIALS
PIER NO.2
PIER NO.4 SAME
PHASE I

REINFORCING BARS

Mark or Size	No. of Bars	Length (Ft.)	Weight (Lbs.)
702c	63	6'-6"	
#7	11	31'-6"	
#7	11	5'-0"	
#7	71	19'-6"	
Total #7 (Plain)			4488
601c	33	11'-4"	
#6	42	33'-3"	
#6	6	29'-6"	
#6	11	28'-0"	
#6	28	4'-0"	
Total #6 (Plain)			3556
401c	29	8'-7"	
402c	29	2'-11"	
403c	4	7'-1"	
404c	3	3'-6"	
405c	15	4'-2"	
406c	58	5'-6"	
407c	34	5'-2"	
#4	5	7'-6"	
#4	5	6'-0"	
#4	1x21	Group "A"	
Total #4 (Plain)			806
Total Steel (Plain)			8850

CONCRETE

Class "A" in Substructure	
Cap	9.3 Cys.
Stem	116.3 Cys.
Total Class "A" in Substructure	125.6 Cys.
Class "B" in Footing	43.6 Cys.

MISCELLANEOUS

7-14"ϕ Steel Encased Concrete Piles	
(0.375" Wall Thickness)	
at 75 Lft. Each (Pier No.2)	525 Lft.
Test Pile, Dynamic, Production	
1 @ 85' Ea.	85 Lft.
Dynamic Pile Load Test	1 Ea.
Test Pile, Dynamic, Restrike	1 Ea.
Surface Seal	74 Sft.
Field Drilled Holes in Concrete	39 Each
Conical Pile Shoe, 14 IN	8 Each
8-14"ϕ Steel Encased Concrete Piles	
(0.375" Wall Thickness)	
at 75 Lft. Each (Pier No.4)	600 Lft.

BILL OF MATERIALS
PIER NO.3
PHASE I

REINFORCING BARS

Mark or Size	No. of Bars	Length (Ft.)	Weight (Lbs.)
702c	63	6'-6"	
#7	11	31'-6"	
#7	11	5'-0"	
#7	71	20'-6"	
Total #7 (Plain)			4488
601c	33	11'-4"	
#6	44	33'-3"	
#6	4	29'-6"	
#6	11	28'-0"	
#6	28	4'-0"	
Total #6 (Plain)			4633
402c	29	2'-11"	
403c	4	7'-1"	
405c	15	4'-2"	
406c	58	5'-6"	
407c	34	5'-2"	
419c	29	7'-9"	
420c	3	3'-1"	
#4	5	7'-6"	
#4	5	6'-0"	
#4	1x22	Group "B"	
Total #4 (Plain)			797
Total Steel (Plain)			9918

CONCRETE

Class "A" in Substructure	
Cap	8.2 Cys.
Stem	121.9 Cys.
Total Class "A" in Substructure	130.1 Cys.
Class "B" in Footing	43.6 Cys.

MISCELLANEOUS

7-14"ϕ Steel Encased Concrete Piles	
(0.375" Wall Thickness)	
at 75 Lft. Each	525 Lft.
Test Pile, Dynamic, Production	
1 @ 85' Ea.	85 Lft.
Dynamic Pile Load Test	1 Ea.
Test Pile, Dynamic, Restrike	1 Ea.
Surface Seal	74 Sft.
Field Drilled Holes in Concrete	39 Each
Conical Pile Shoe, 14 IN	8 Each

⊕ A.S.T.M. A615, Grade 60

PIERS NO.2, NO.3 AND NO.4 DETAILS

BRYAN WRIGHT
REGISTERED
No. PE11100630
STATE OF INDIANA
PROFESSIONAL ENGINEER

RECOMMENDED FOR APPROVAL: 4/24/2018
DESIGN ENGINEER DATE

DESIGNED: B. WRIGHT DRAWN: D. SHEETZ
CHECKED: C. OBRIEN CHECKED: B. WRIGHT

BRIDGE NO.207
OVER WHITE RIVER
HAMILTON COUNTY

Headquarters
8450 WESTFIELD BLVD., SUITE 300
INDIANAPOLIS, IN. 46240-8302
TEL 317-713-4615
FAX 317-713-4616
www.BFSEngr.com

Butler Fairman & Seufert
CIVIL ENGINEERS

Branch Locations
FORT WAYNE 260-459-1532
LOUISVILLE 502-593-1996
LAFAYETTE 765-423-5602
MERRILLVILLE 219-769-2333
PLAINFIELD 317-839-3242

HORIZONTAL SCALE	BRIDGE FILE
AS NOTED	HAMILTON 207
VERTICAL SCALE	DESIGNATION
AS NOTED	

SURVEY BOOK	SHEET
ELECTRONIC	31 OF 59
CONTRACT	PROJECT
	PB-18-0001

BFS NO. 6063

H:\606300.0000\ProDevelopment\Design\Drawings\606387A3.dwg Donald Sheetz Plot:6/25/2018 1:37 PM Save:6/20/2018 3:00 PM

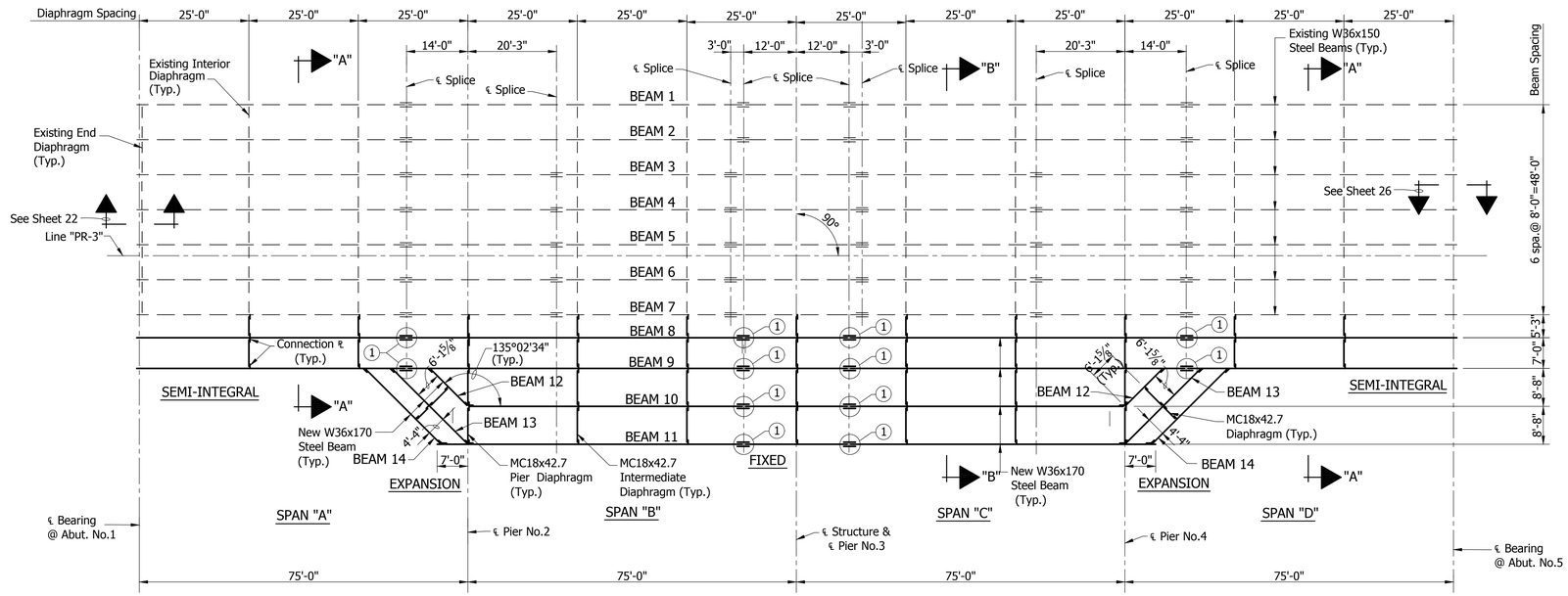

① Splice No.1

FRAMING PLAN

Scale: 1/16"=1'-0"

STRUCTURAL STEEL FABRICATION NOTES

All Structural Steel Beams and Splice Plates shall be A.S.T.M. A709, Grade 50.

All Secondary Members, Stiffeners, and Bearing Assembly Steel shall be A.S.T.M. A709, Grade 36.

All Existing and Proposed Beams and Bearing Steel shall be painted RAL 7016 "Anthracite Grey".

All bolts shall be 7/8"ϕ A325 High Strength and all holes shall be 15/16"ϕ unless otherwise noted.

Estimated weight of Structural Steel of 206,504 pounds includes 14,913 pounds of Grade 36 and 191,591 pounds of Grade 50. The weight of high strength bolts is not included in the estimated weight of Structural Steel. The cost of these bolts shall be included in the cost of Structural Steel.

The dimensions for these detail plans are based on construction plans and/or shop drawings of the original structure. It is the Contractor's responsibility to verify controlling dimensions in the field prior to fabrication.

NOTES

See Sheets 33 for Beam Elevations and Shear Stud Details.
See Sheet 35 for Diaphragm Details.
See Sheet 36 for Splice Details.
See Sheet 37 and 38 for No Load Camber and Reaming Diagrams.
See Sheet 40 for Section "A-A".
See Sheet 41 for Section "B-B".

STRUCTURAL STEEL DETAILS

BRYAN WRIGHT REGISTERED No. PE11100630 STATE OF INDIANA PROFESSIONAL ENGINEER

RECOMMENDED FOR APPROVAL: _____ DESIGN ENGINEER 4/24/2018 DATE

DESIGNED: B. WRIGHT DRAWN: D. SHEETZ
CHECKED: C. OBRIEN CHECKED: B. WRIGHT

BRIDGE NO.207
OVER WHITE RIVER
HAMILTON COUNTY

Headquarters
8450 WESTFIELD BLVD., SUITE 300
INDIANAPOLIS, IN. 46240-8302
TEL 317-713-4615
FAX 317-713-4616
www.BFSEngr.com

Butler Fairman & Seufert CIVIL ENGINEERS

Branch Locations
FORT WAYNE 260-459-1532
LOUISVILLE 502-593-1996
LAFAYETTE 765-423-5602
MERRILLVILLE 219-769-2333
PLAINFIELD 317-839-3242

HORIZONTAL SCALE	BRIDGE FILE
AS NOTED	HAMILTON 207
VERTICAL SCALE	DESIGNATION
AS NOTED	

SURVEY BOOK	SHEET		
ELECTRONIC	32	OF	59
CONTRACT	PROJECT		
	PB-18-0001		

BFS NO. 6063

H:\606300.0000\Pro_Development\Design\Drawings\606387S1.dwg Donald Sheetz Plot:6/25/2018 1:37 PM Save:6/25/2018 9:40 AM

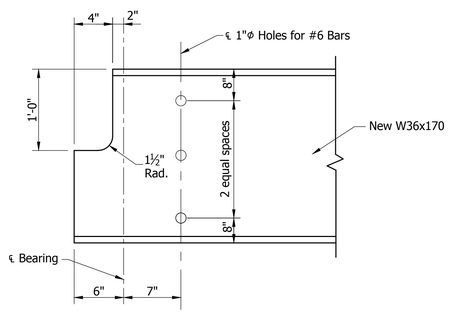

DETAIL "A"

Not to Scale

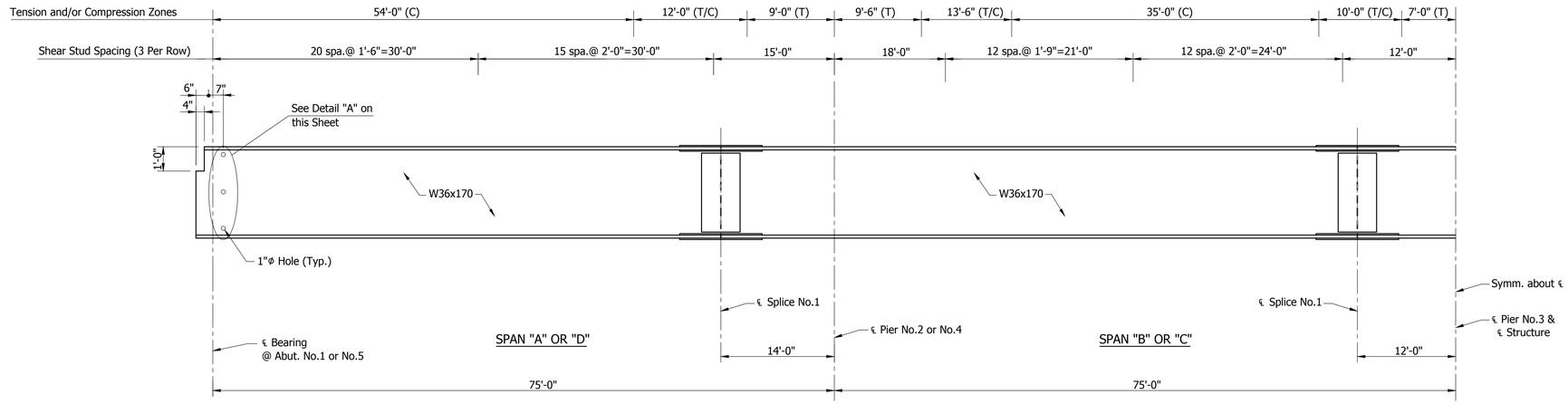

(T) = Tension
(T/C) = Reversal
(C) = Compression

BEAM ELEVATION
BEAM 8
SPANS "A" AND "B" (SHOWN)
SPANS "C" AND "D" (OPP. HAND)

Not to Scale

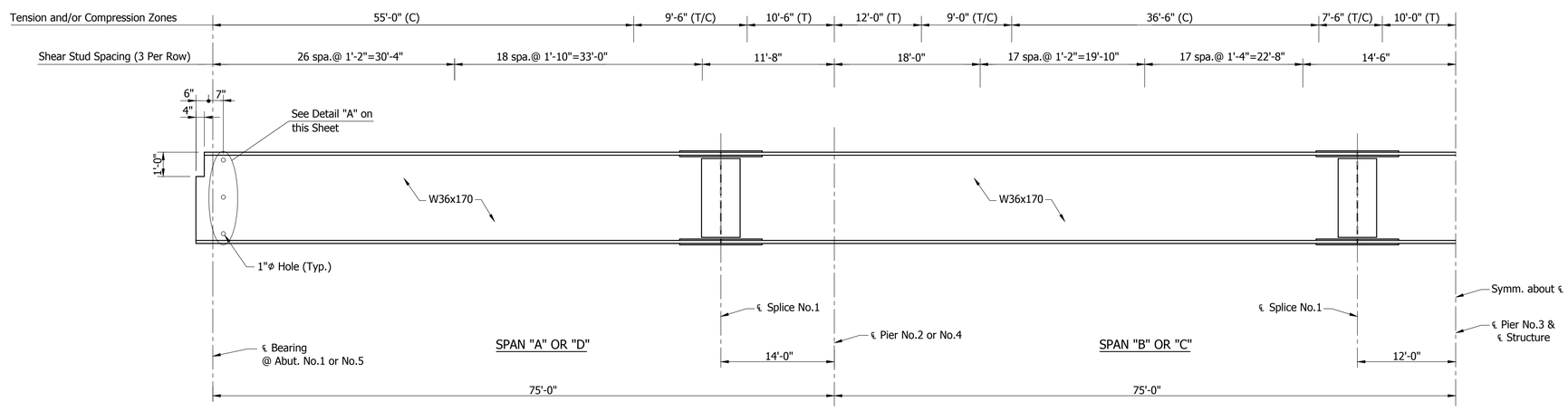

BEAM ELEVATION
BEAM 9
SPANS "A" AND "B" (SHOWN)
SPANS "C" AND "D" (OPP. HAND)

Not to Scale

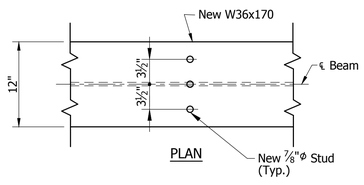

PLAN

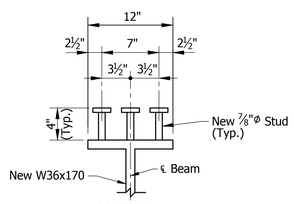

SECTION

SHEAR STUD DETAILS

Not to Scale

NOTES

See Sheet 32 for Framing Plan and Structural Steel Fabrication Notes.
See Sheet 35 for Diaphragm Details.
See Sheet 36 for Splice Details and Bearing Assembly Details.
See Sheet 37 and 38 for No Load Camber and Reaming Diagrams.

STRUCTURAL STEEL DETAILS

BRYAN WRIGHT REGISTERED No. PE11100630 STATE OF INDIANA PROFESSIONAL ENGINEER

RECOMMENDED FOR APPROVAL: DESIGN ENGINEER 4/24/2018 DATE

DESIGNED: B. WRIGHT DRAWN: D. SHEETZ
CHECKED: C. OBRIEN CHECKED: B. WRIGHT

BRIDGE NO.207
OVER WHITE RIVER
HAMILTON COUNTY

Headquarters
8450 WESTFIELD BLVD., SUITE 300
INDIANAPOLIS, IN. 46240-8302
TEL 317-713-4615
FAX 317-713-4616
www.BFSEngr.com

BF&S Butler Fairman & Seufert CIVIL ENGINEERS

Branch Locations
FORT WAYNE 260-459-1532
LOUISVILLE 502-593-1996
LAFAYETTE 765-423-5602
MERRILLVILLE 219-769-2333
PLAINFIELD 317-839-3242

HORIZONTAL SCALE	BRIDGE FILE
AS NOTED	HAMILTON 207
VERTICAL SCALE	DESIGNATION
AS NOTED	

SURVEY BOOK	SHEET		
ELECTRONIC	33	OF	59
CONTRACT	PROJECT		
	PB-18-0001		

BFS NO. 6063

H:\606300.0000\ProDevelopment\Design\Drawings\606397S2.dwg Donald Sheetz Plot:6/25/2018 1:38 PM Save:4/18/2018 8:28 AM

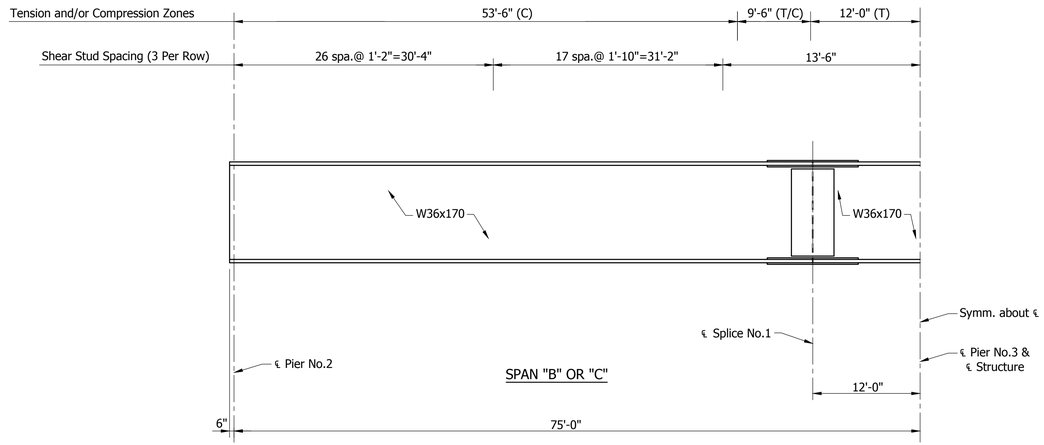

BEAM ELEVATION
BEAM 10
SPAN "B" (SHOWN)
SPAN "C" (OPP. HAND)
Not to Scale

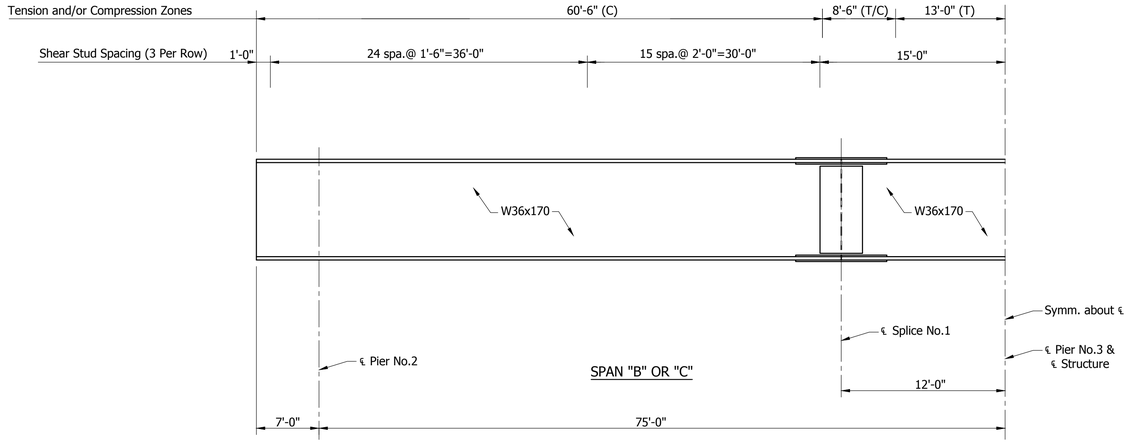

BEAM ELEVATION
BEAM 11
SPAN "B" (SHOWN)
SPAN "C" (OPP. HAND)
Not to Scale

NOTES

See Sheet 32 for Framing Plan and Structural Steel Fabrication Notes.
See Sheet 35 for Diaphragm Details.
See Sheet 36 for Splice Details and Bearing Assembly Details.
See Sheet 37 and 38 for No Load Camber and Reaming Diagrams.

STRUCTURAL STEEL DETAILS

BRYAN WRIGHT REGISTERED No. PE11100630 STATE OF INDIANA PROFESSIONAL ENGINEER

RECOMMENDED FOR APPROVAL: 4/24/2018
DESIGN ENGINEER DATE

DESIGNED: B. WRIGHT DRAWN: D. SHEETZ
CHECKED: C. OBRIEN CHECKED: B. WRIGHT

BRIDGE NO.207
OVER WHITE RIVER
HAMILTON COUNTY

Headquarters
8450 WESTFIELD BLVD., SUITE 300
INDIANAPOLIS, IN. 46240-8302
TEL 317-713-4615
FAX 317-713-4616
www.BFSEngr.com

BF&S Butler Fairman & Seufert CIVIL ENGINEERS

Branch Locations
FORT WAYNE 260-459-1532
LOUISVILLE 502-593-1996
LAFAYETTE 765-423-5602
MERRILLVILLE 219-769-2333
PLAINFIELD 317-839-3242

HORIZONTAL SCALE	BRIDGE FILE
AS NOTED	HAMILTON 207
VERTICAL SCALE	DESIGNATION
AS NOTED	

SURVEY BOOK	SHEET		
ELECTRONIC	34	OF	59
CONTRACT	PROJECT		
	PB-18-0001		

BFS NO. 6063

H:\606300.0000\ProDevelopment\Design\Drawings\606.3B752A.dwg Donald Sheetz Plot:6/25/2018 1:38 PM Save:6/19/2018 6:38 AM

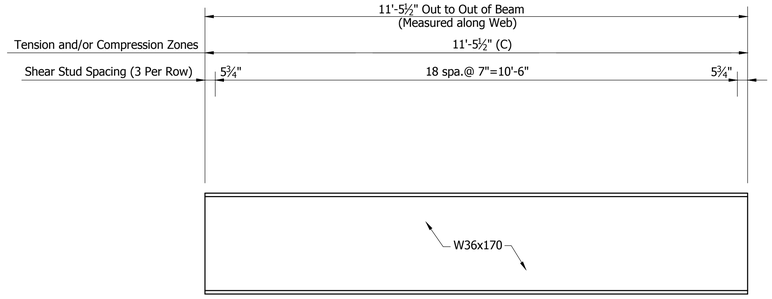

BEAM ELEVATION
BEAM 12
Not to Scale

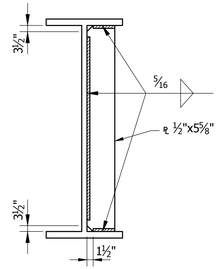

DIAPHRAGM
CONNECTION PLATE
Not to Scale

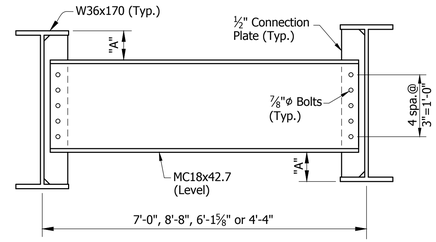

ELEVATION

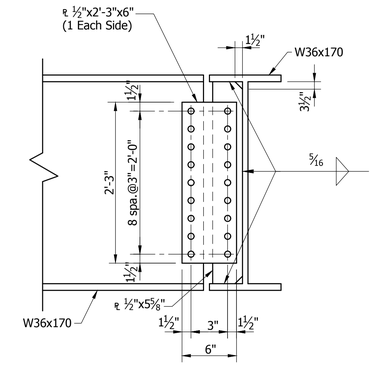

ANGLED BEAM
CONNECTION DETAIL
Not to Scale

Note:
"A" Dimensions
shall be equal.

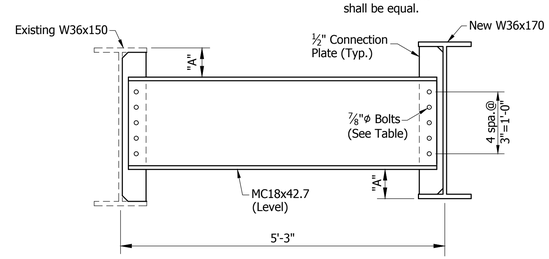

ELEVATION

TYPICAL DIAPHRAGM DETAILS
Not to Scale

(T) = Tension
(T/C) = Reversal
(C) = Compression

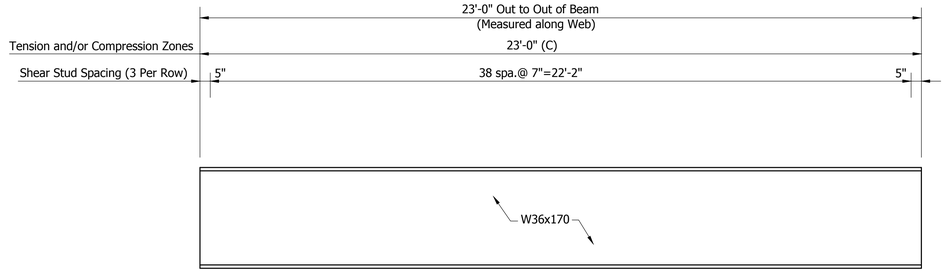

BEAM ELEVATION
BEAMS 13 AND 14
Not to Scale

Note: Fabricate Beams 12, 13 and 14
with Natural Camber up.

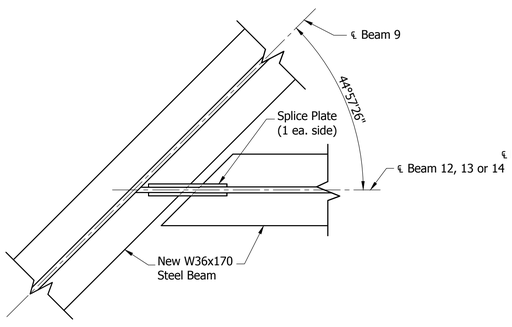

PLAN

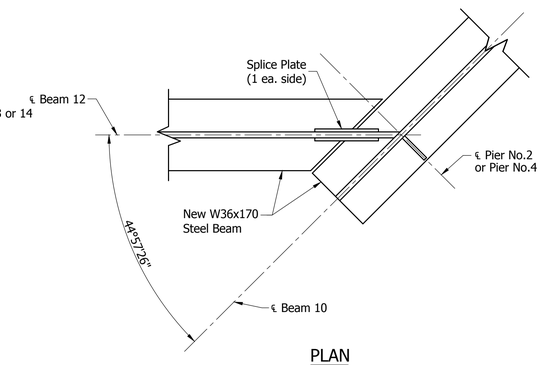

PLAN

SPLICE DETAILS
Not to Scale

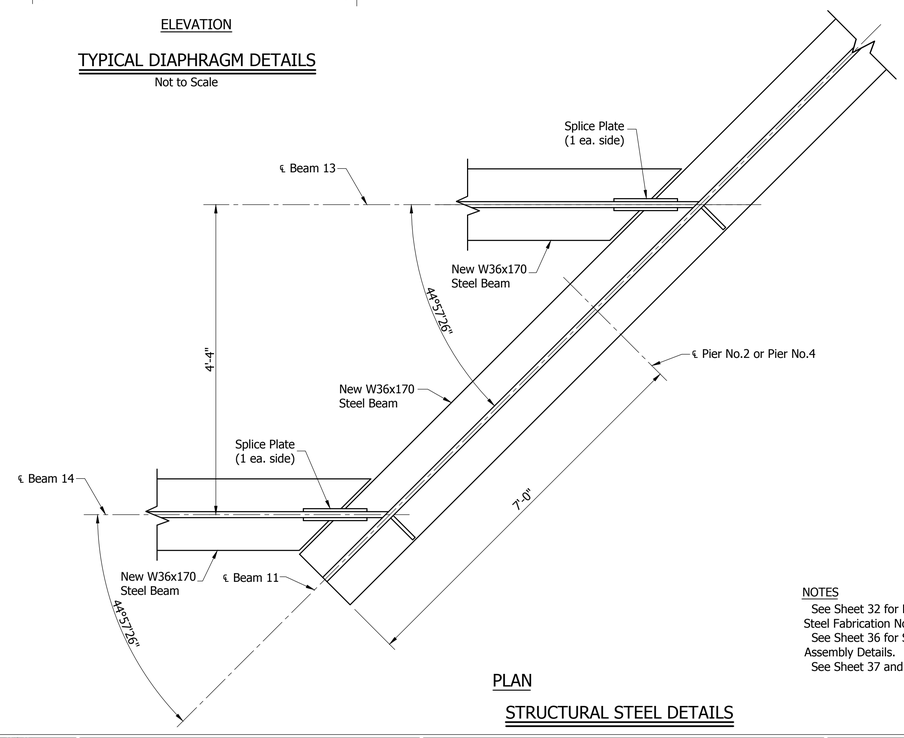

PLAN

NOTES
See Sheet 32 for Framing Plan and Structural Steel Fabrication Notes.
See Sheet 36 for Splice Details and Bearing Assembly Details.
See Sheet 37 and 38 for No Load Camber and Reaming Diagrams.

STRUCTURAL STEEL DETAILS

BRYAN WRIGHT
REGISTERED
No. PE11100630
STATE OF INDIANA
PROFESSIONAL ENGINEER

RECOMMENDED FOR APPROVAL: DESIGN ENGINEER — DATE 4/24/2018

DESIGNED: B. WRIGHT DRAWN: D. SHEETZ
CHECKED: C. OBRIEN CHECKED: B. WRIGHT

BRIDGE NO.207
OVER WHITE RIVER
HAMILTON COUNTY

Headquarters
8450 WESTFIELD BLVD., SUITE 300
INDIANAPOLIS, IN. 46240-8302
TEL 317-713-4615
FAX 317-713-4616
www.BFSEngr.com

Butler Fairman Seufert
CIVIL ENGINEERS

Branch Locations
FORT WAYNE 260-459-1532
LOUISVILLE 502-593-1996
LAFAYETTE 765-423-5602
MERRILLVILLE 219-769-2333
PLAINFIELD 317-839-3242

HORIZONTAL SCALE	BRIDGE FILE
AS NOTED	HAMILTON 207
VERTICAL SCALE	DESIGNATION
AS NOTED	

SURVEY BOOK	SHEET		
ELECTRONIC	35	OF	59
CONTRACT	PROJECT		
	PB-18-0001		

6063
BFS NO.

H:\6706300.0000\ProjDevelopment\Design\Drawings\6063075-3.dwg Donald Sheetz Plot:6/25/2018 1:38 PM Saved:6/19/2018 6:39 AM

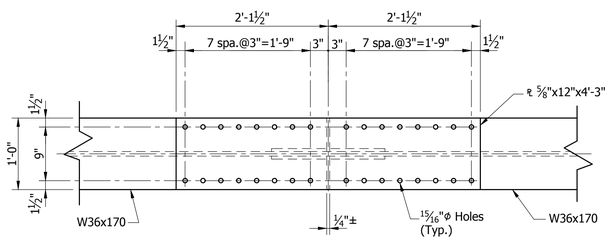

PLAN

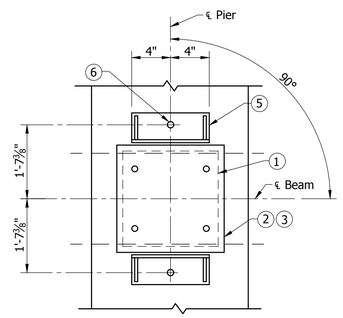

PLAN

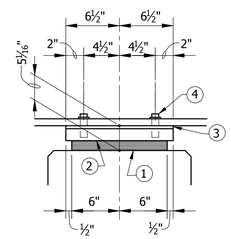

ELEVATION

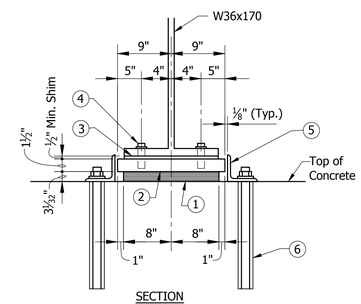

SECTION

PIERS NO.2 AND NO.4

EXPANSION BEARING ASSEMBLY

Not to Scale

ABUT. NO.1 AND NO.5
PIER NO.2 AND NO.4

1. Elastomeric Bearing Assembly INDOT Type S5-A (55 Durometer) (Bonded to Top Plate)
2. 1'-6"x1'-1"x 1½" Top Plate Drill and Tap 1" Deep for ¾"ϕ Bolts
3. 1'-0"x1'-1" Shim Plates with ⅞"ϕ Holes
4. ¾"ϕ Hex Bolt (A325) with Lock Washer (Typ.)
5. Retainer Angle (See Detail this Sheet) (Typ.)
6. 1¼"ϕx1'-3" Threaded Anchor Rod (A307) with Hex Nut and Washer. (See Detail this Sheet) Set in 1'-2" Deep Field Drilled Hole with an Approved Anchor System. (Min. Pullout=106,000 Lbs.) (Typ.)

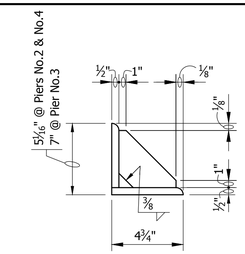

SECTION

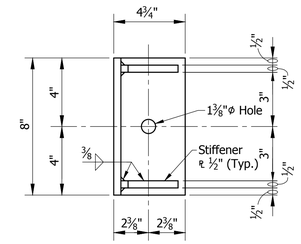

PLAN

RETAINER ANGLE DETAILS

Not to Scale

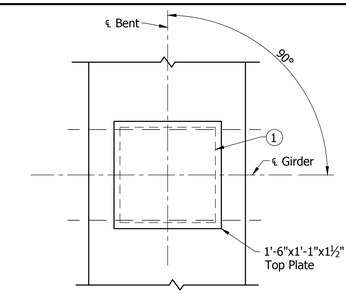

PLAN

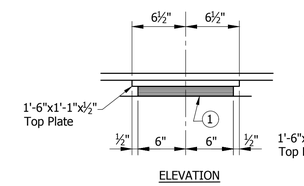

ELEVATION

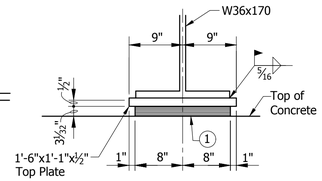

SECTION

BENTS NO.1 AND NO.5

BEARING ASSEMBLY

Not to Scale

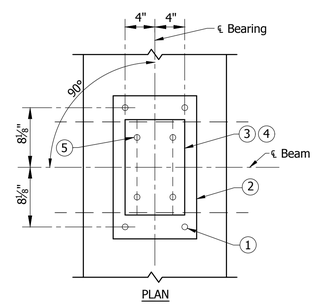

PLAN

PIER NO.3

1. 1"ϕx1'-4" Threaded Anchor Rod (A307) with Hex Nut and Washer. (See Detail this Sheet) Set in 1'-0" Deep Field Drilled Hole with an Approved Anchor System. (Min. Pullout=47,100 Lbs.) (Typ.)
2. Fixed Base 1'-0"x1'-8¼"x2" (See Detail this Sheet)
3. Top Plate 2"x9"x1'-4¼" (Straightened) (See Detail this Sheet)
4. 9"x1'-0" Shim Plates with 15⁄16"ϕ Holes (Thickness = ½" Min.)
5. ⅞"ϕ Hex Bolt (A325) with Lock Washer (Typ.)

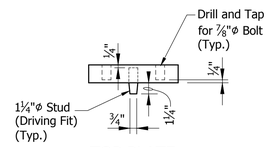

TOP PLATE

Not to Scale

Note: All Steel in Bearing Assemblies shall be A36 unless noted.

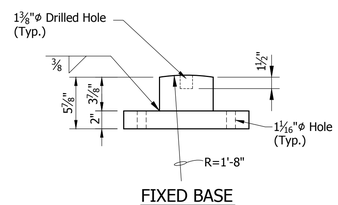

FIXED BASE

Not to Scale

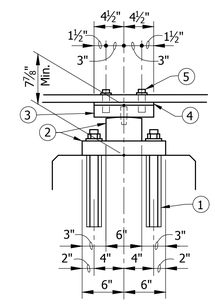

ELEVATION

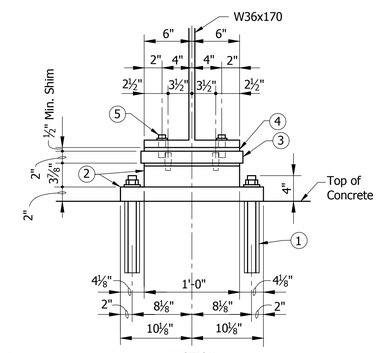

SECTION

PIERS NO.3

FIXED BEARING ASSEMBLY

Not to Scale

STRUCTURAL STEEL DETAILS

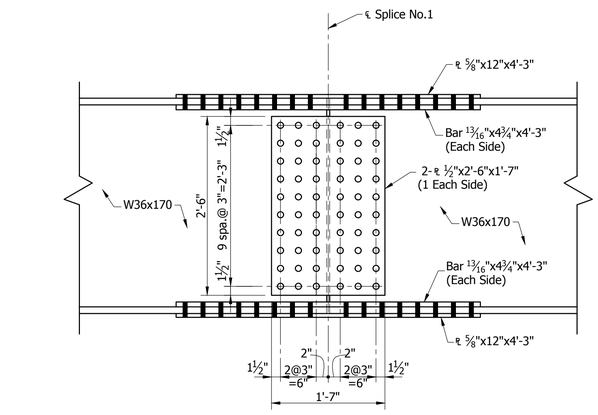

ELEVATION

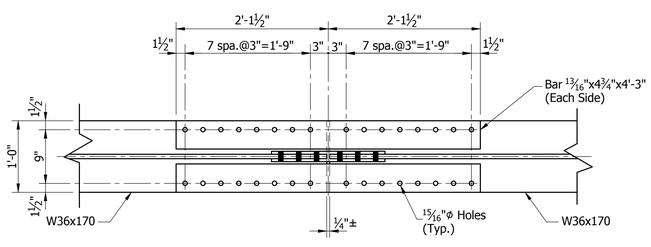

BOTTOM PLAN

SPLICE NO.1 DETAILS

Scale: 1"=1'-0"

TOP OF SPLICE ELEVATIONS

BEAM NO.	SPLICE NO.1	SPLICE NO.2	SPLICE NO.3	SPLICE NO.4
8	766.96	767.63	767.67	767.28
9	766.87	767.54	767.58	767.19
10	—	767.41	767.45	—
11	—	767.27	767.31	—

Notes:
Splice Elevations shown in Table are with falsework removed and allow for steel dead load only.
Top of Splice Plates shall be adjusted to the Elevations shown in Table before field splices are bolted.

NOTES
See Sheet 32 for Framing Plan and Structural Steel Fabrication Notes.
See Sheet 37 and 38 for No Load Camber and Reaming Diagrams.

BRYAN WRIGHT REGISTERED No. PE11100630 STATE OF INDIANA PROFESSIONAL ENGINEER

RECOMMENDED FOR APPROVAL: DESIGN ENGINEER 4/24/2018 DATE

DESIGNED: B. WRIGHT DRAWN: D. SHEETZ
CHECKED: C. OBRIEN CHECKED: B. WRIGHT

BRIDGE NO.207
OVER WHITE RIVER
HAMILTON COUNTY

Headquarters
8450 WESTFIELD BLVD., SUITE 300
INDIANAPOLIS, IN. 46240-8302
TEL 317-713-4615
FAX 317-713-4616
www.BFSEngr.com

Butler Fairman & Seufert CIVIL ENGINEERS

Branch Locations
FORT WAYNE 260-459-1532
LOUISVILLE 502-593-1996
LAFAYETTE 765-423-5602
MERRILLVILLE 219-769-2333
PLAINFIELD 317-839-3242

HORIZONTAL SCALE	BRIDGE FILE
AS NOTED	HAMILTON 207
VERTICAL SCALE	DESIGNATION
AS NOTED	

SURVEY BOOK	SHEET
ELECTRONIC	36 OF 59
CONTRACT	PROJECT
	PB-18-0001

BFS NO. 6063

H:\606300.0000\ProDevelopment\Design\Drawings\606397S5.dwg Donald Sheetz Plot:6/25/2018 1:38 PM Save:4/18/2018 8:28 AM

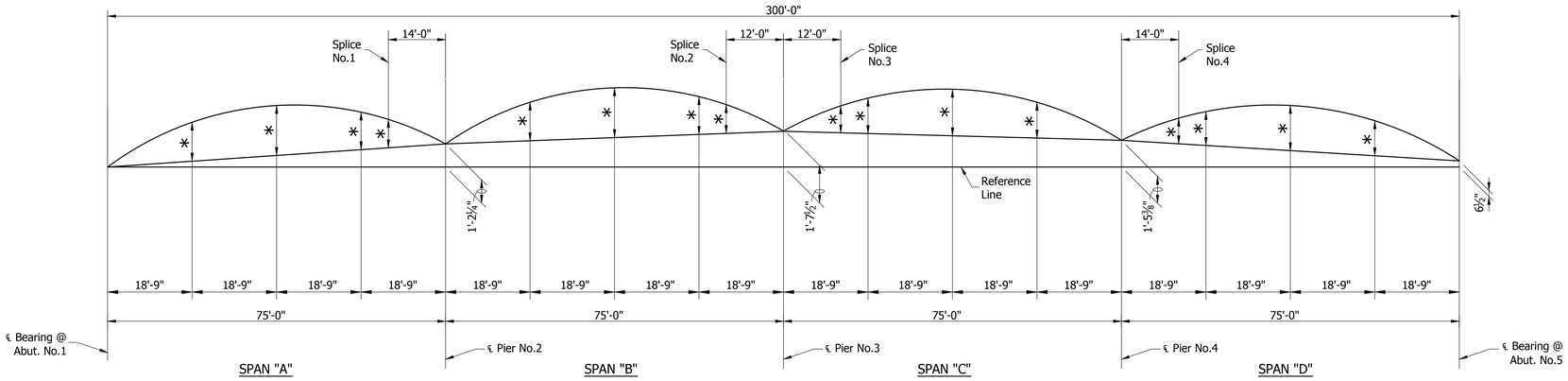

∗ See Tables below for Values.

NO LOAD CAMBER AND REAMING DIAGRAM-BEAMS NO.8 AND NO.9

Not to Scale

TABLE OF CAMBERS-BEAM NO.8

	SPAN "A"				SPAN "B"				SPAN "C"				SPAN "D"			
	¼ PT.	½ PT.	¾ PT.	℄ Splice No.1	¼ PT.	½ PT.	¾ PT.	℄ Splice No.2	℄ Splice No.3	¼ PT.	½ PT.	¾ PT.	℄ Splice No.4	¼ PT.	½ PT.	¾ PT.
DEAD LOAD STEEL	3/16"	3/16"	1/8"	1/16"	0	1/16"	1/16"	0	0	1/16"	1/16"	0	1/16"	1/8"	3/16"	3/16"
DEAD LOAD CONCRETE	9/16"	3/4"	3/8"	1/4"	1/16"	1/4"	1/8"	1/16"	1/16"	1/8"	1/4"	1/16"	1/4"	3/8"	3/4"	9/16"
SUBTOTAL	3/4"	15/16"	1/2"	3/8"	1/8"	5/16"	3/16"	1/8"	1/8"	3/16"	5/16"	1/16"	3/8"	1/2"	15/16"	3/4"
VERTICAL CURVE	1/4"	3/8"	1/2"	1/2"	13/16"	1 3/16"	13/16"	3/4"	5/8"	15/16"	1 3/16"	13/16"	3/8"	3/8"	1/4"	1/8"
TOTAL	1"	1 5/16"	1"	13/16"	15/16"	1 1/2"	1"	13/16"	11/16"	1 1/8"	1 1/2"	3/4"	11/16"	7/8"	1 3/16"	7/8"

TABLE OF CAMBERS-BEAM NO.9

	SPAN "A"				SPAN "B"				SPAN "C"				SPAN "D"			
	¼ PT.	½ PT.	¾ PT.	℄ Splice No.1	¼ PT.	½ PT.	¾ PT.	℄ Splice No.2	℄ Splice No.3	¼ PT.	½ PT.	¾ PT.	℄ Splice No.4	¼ PT.	½ PT.	¾ PT.
DEAD LOAD STEEL	3/16"	3/16"	1/8"	1/16"	0	1/16"	1/16"	0	0	1/16"	1/16"	0	1/16"	1/8"	3/16"	3/16"
DEAD LOAD CONCRETE	3/4"	15/16"	1/2"	3/8"	1/8"	5/16"	3/16"	1/8"	1/8"	3/16"	5/16"	1/8"	3/8"	1/2"	15/16"	3/4"
SUBTOTAL	7/8"	1 1/8"	5/8"	7/16"	1/8"	3/8"	1/4"	1/8"	1/8"	3/16"	3/8"	1/8"	7/16"	5/8"	1 1/8"	7/8"
VERTICAL CURVE	1/4"	3/8"	1/2"	1/2"	13/16"	1 3/16"	13/16"	3/4"	5/8"	15/16"	1 3/16"	13/16"	3/8"	3/8"	1/4"	1/8"
TOTAL	1 1/8"	1 1/2"	1 1/8"	15/16"	15/16"	1 9/16"	1 1/16"	7/8"	3/4"	1 1/8"	1 9/16"	15/16"	13/16"	1"	1 3/16"	1

STRUCTURAL STEEL DETAILS

BRYAN WRIGHT REGISTERED No. PE11100630 STATE OF INDIANA PROFESSIONAL ENGINEER

RECOMMENDED FOR APPROVAL: DESIGN ENGINEER 4/24/2018 DATE

DESIGNED: B. WRIGHT DRAWN: D. SHEETZ

CHECKED: C. OBRIEN CHECKED: B. WRIGHT

BRIDGE NO.207
OVER WHITE RIVER
HAMILTON COUNTY

Headquarters
8450 WESTFIELD BLVD., SUITE 300
INDIANAPOLIS, IN. 46240-8302
TEL 317-713-4615
FAX 317-713-4616
www.BFSEngr.com

Butler Fairman & Seufert CIVIL ENGINEERS

Branch Locations
FORT WAYNE 260-459-1532
LOUISVILLE 502-593-1996
LAFAYETTE 765-423-5602
MERRILLVILLE 219-769-2333
PLAINFIELD 317-839-3242

HORIZONTAL SCALE	BRIDGE FILE
AS NOTED	HAMILTON 207
VERTICAL SCALE	DESIGNATION
AS NOTED	
SURVEY BOOK	SHEET
ELECTRONIC	37 OF 59
CONTRACT	PROJECT
	PB-18-0001

BFS NO. 6063

H:\606300.0000\ProDevelopment\Design\Drawings\606.38796.dwg Donald Sheetz Plot:6/25/2018 1:38 PM Save:4/18/2018 8:28 AM

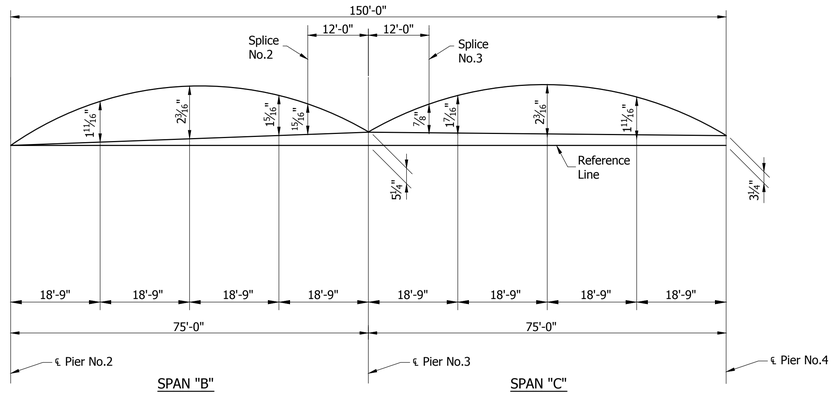

NO LOAD CAMBER AND REAMING DIAGRAM-BEAM NO.10

Not to Scale

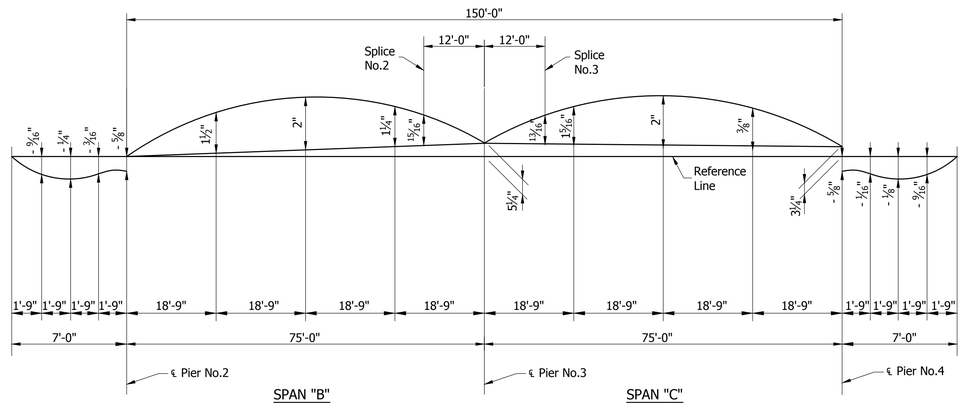

NO LOAD CAMBER AND REAMING DIAGRAM-BEAM NO.11

Not to Scale

TABLE OF CAMBERS-BEAM NO.10

	SPAN "B"				SPAN "C"			
	¼ PT.	½ PT.	¾ PT.	℄ Splice No.1	℄ Splice No.2	¼ PT.	½ PT.	¾ PT.
DEAD LOAD STEEL	1/8"	3/16"	1/16"	1/16"	1/16"	1/16"	3/16"	1/8"
DEAD LOAD CONCRETE	11/16"	7/8"	3/8"	3/16"	3/16"	3/8"	7/8"	11/16"
SUBTOTAL	13/16"	1"	1/2"	1/4"	1/4"	1/2"	1"	13/16"
VERTICAL CURVE	13/16"	1 3/16"	13/16"	3/4"	5/8"	15/16"	1 3/16"	13/16"
TOTAL	1 11/16"	2 3/16"	1 5/16"	15/16"	7/8"	1 7/16"	2 3/16"	1 11/16"

TABLE OF CAMBERS-BEAM NO.11

	SPAN "A"				SPAN "B"				SPAN "C"				SPAN "D"			
	¼ PT.	½ PT.	¾ PT.	END	¼ PT.	½ PT.	¾ PT.	℄ Splice No.2	℄ Splice No.3	¼ PT.	½ PT.	¾ PT.	END	¼ PT.	½ PT.	¾ PT.
DEAD LOAD STEEL	- 1/16"	- 0	- 0	- 1/16"	1/8"	1/8"	1/16"	1/16"	1/16"	1/16"	1/8"	1/8"	- 1/16"	- 0	- 0	- 1/16"
DEAD LOAD CONCRETE	- 3/16"	- 1/8"	- 1/16"	- 1/4"	9/16"	11/16"	5/16"	3/16"	3/16"	5/16"	11/16"	9/16"	- 1/4"	- 1/16"	- 1/8"	- 3/16"
SUBTOTAL	- 3/16"	- 1/8"	- 1/16"	- 5/16"	5/8"	13/16"	3/8"	3/16"	3/16"	3/8"	13/16"	7/16"	- 5/16"	- 1/16"	- 1/8"	- 3/16"
VERTICAL CURVE	- 3/8"	- 1/8"	- 1/8"	- 3/8"	13/16"	1 3/16"	13/16"	3/4"	5/8"	15/16"	1 3/16"	13/16"	- 3/8"	- 0	- 1/4"	- 3/8"
TOTAL	- 9/16"	- 1/4"	- 3/16"	- 5/8"	1 1/2"	2"	1 1/4"	15/16"	13/16"	1 5/16"	2"	3/8"	- 5/8"	- 1/16"	- 1/8"	- 9/16"

STRUCTURAL STEEL DETAILS

BRYAN WRIGHT
REGISTERED
No. PE11100630
STATE OF INDIANA
PROFESSIONAL ENGINEER

RECOMMENDED FOR APPROVAL: DESIGN ENGINEER 4/24/2018 DATE

DESIGNED: B. WRIGHT DRAWN: D. SHEETZ

CHECKED: C. OBRIEN CHECKED: B. WRIGHT

BRIDGE NO.207
OVER WHITE RIVER
HAMILTON COUNTY

Headquarters
8450 WESTFIELD BLVD., SUITE 300
INDIANAPOLIS, IN. 46240-8302
TEL 317-713-4615
FAX 317-713-4616
www.BFSEngr.com

Butler Fairman & Seufert CIVIL ENGINEERS

Branch Locations
FORT WAYNE 260-459-1532
LOUISVILLE 502-593-1996
LAFAYETTE 765-423-5602
MERRILLVILLE 219-769-2333
PLAINFIELD 317-839-3242

HORIZONTAL SCALE	BRIDGE FILE
AS NOTED	HAMILTON 207
VERTICAL SCALE	DESIGNATION
AS NOTED	
SURVEY BOOK	SHEET
ELECTRONIC	38 OF 59
CONTRACT	PROJECT
	PB-18-0001

BFS NO. 6063

H:\606300.0000\ProDevelopment\Design\Drawings\6063875.dwg Donald Sheetz Plot:6/25/2018 1:38 PM Save:4/18/2018 8:27 AM

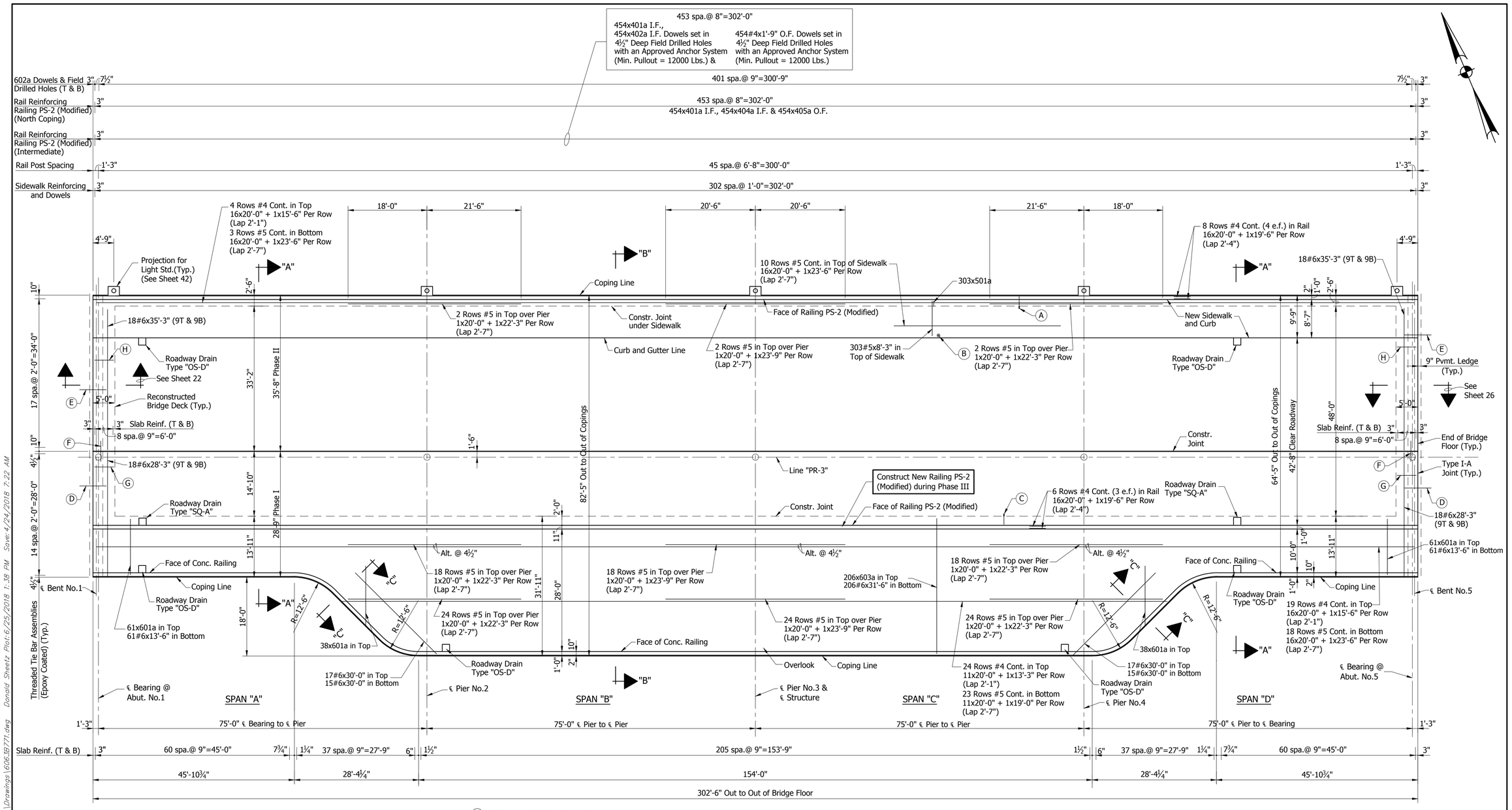

PLAN

Scale: 3/32"=1'-0"

(A) 808x602a Dowels (404T & 404B) set in 6¾" Deep Field Drilled Holes with an Approved Anchor System (Min. Pullout = 26400 Lbs.)

(B) 303x502a Dowels set in 5¾" Deep Field Drilled Holes with an Approved Anchor System (Min. Pullout = 18600 Lbs.)

(C) 808#6x3'-3" Dowels (404T & 404B) set in 6¾" Deep Field Drilled Holes with an Approved Anchor System (Min. Pullout = 26400 Lbs.)

(D) 15-Threaded Tie Bar Assemblies (#5x3'-0" each way) (Epoxy Coated)

(E) 18-Threaded Tie Bar Assemblies (#5x3'-0" each way) (Epoxy Coated)

(F) 18-Threaded Tie Bar Assemblies (9T & 9B) (#5x3'-0" each way) (Epoxy Coated)

(G) 20#4x4'-6" in Top @ 9" Max. Spa. 18#5x4'-6" in Bott. btwn. Beams @ 9" Max. Spa.

(H) 45#4x4'-6" in Top @ 9" Max. Spa. 36#5x4'-6" in Bott. btwn. Beams @ 9" Max. Spa.

NOTES

See Sheet 40 for Section "A-A" and Railing Details.
See Sheet 41 for Sections "B-B" and "C-C" thru Overlook.
See Sheet 42 for Bar Bending Details and Bills of Materials.

FLOOR DETAILS

BRYAN WRIGHT REGISTERED No. PE11100630 STATE OF INDIANA PROFESSIONAL ENGINEER

RECOMMENDED FOR APPROVAL: 4/24/2018
DESIGN ENGINEER DATE

DESIGNED: B. WRIGHT DRAWN: D. SHEETZ
CHECKED: C. OBRIEN CHECKED: B. WRIGHT

BRIDGE NO.207
OVER WHITE RIVER
HAMILTON COUNTY

Headquarters
8450 WESTFIELD BLVD., SUITE 300
INDIANAPOLIS, IN. 46240-8302
TEL 317-713-4615
FAX 317-713-4616
www.BFSEngr.com

Butler Fairman Seufert

Branch Locations
FORT WAYNE 260-459-1532
LOUISVILLE 502-593-1996
LAFAYETTE 765-423-5602
MERRILLVILLE 219-769-2333
PLAINFIELD 317-839-3242

HORIZONTAL SCALE	BRIDGE FILE
AS NOTED	HAMILTON 207
VERTICAL SCALE	DESIGNATION
AS NOTED	
SURVEY BOOK	SHEET
ELECTRONIC	39 OF 59
CONTRACT	PROJECT
	PB-18-0001

6063
BFS NO.

H:\606300.0000\ProDevelopment\Design\Drawings\606-3971.dwg Donald Sheetz Plot:6/25/2018 1:38 PM Save:4/24/2018 7:22 AM

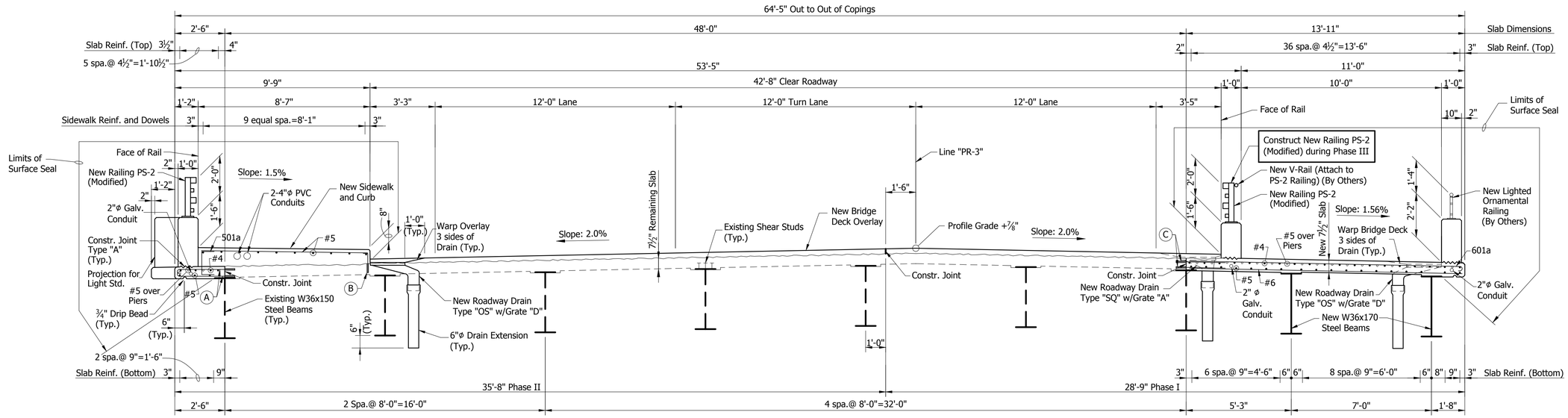

SECTION "A-A"

Scale: ⅜"=1'-0"

(A) 602a Dowels set in 6¾" Deep Field Drilled Holes with an Approved Anchor System (Min. Pullout = 26400 Lbs.)

(B) 502a Dowels set in 5¾" Deep Field Drilled Holes with an Approved Anchor System (Min. Pullout = 18600 Lbs.)

(C) #6x3'-3" Dowels set in 6¾" Deep Field Drilled Holes with an Approved Anchor System (Min. Pullout = 26400 Lbs.)

Note:
See Standard Drawing E706-BRPP-02 and E706-BRPP-04 for Add'l. Details.

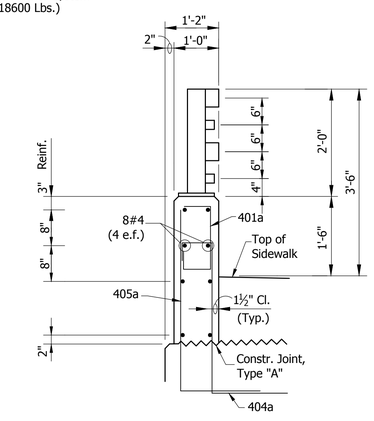

PS-2 (MODIFIED) RAILING SECTION AT SIDEWALK

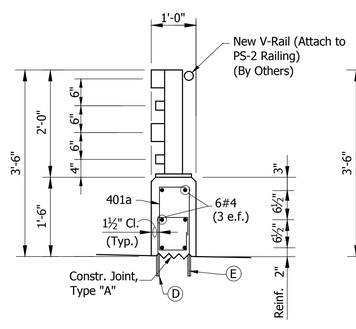

PS-2 (MODIFIED) RAILING SECTION ON BRIDGE DECK

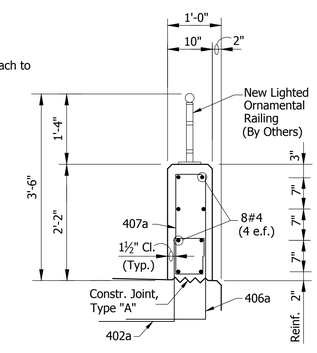

CONCRETE RAILING SECTION ALONG SOUTH COPING

TYPICAL RAIL SECTIONS

Not to Scale

(D) 402a Dowels set in 4½" Deep Field Drilled Holes with an Approved Anchor System (Min. Pullout = 12000 Lbs.)

(E) #4x1'-9" Dowels set in 4½" Deep Field Drilled Holes with an Approved Anchor System (Min. Pullout = 12000 Lbs.)

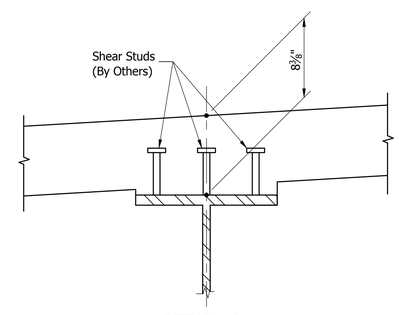

DETAIL "A"

Not to Scale

FLOOR NOTES

After the beams have been erected, concrete forms shall not be blocked against the end of beams in making any pours adjacent to the beam spans.

Suitable restraint shall be provided to prevent the rotation of the outside beams from construction loads such as finishing machines, forms, etc.

The top reinforcing in the slab shall be securely tied down to the slab forms and/or the beams to prevent lifting during concrete placement.

The Contractor may not use permanent metal deck forms.

Railing shall have Formliner applied to all sides.

NOTE
See Sheet 42 for Bar Bending Details and Bills of Materials.

FLOOR DETAILS

BRYAN WRIGHT REGISTERED No. PE11100630 STATE OF INDIANA PROFESSIONAL ENGINEER

RECOMMENDED FOR APPROVAL: DESIGN ENGINEER 4/24/2018 DATE

DESIGNED: B. WRIGHT DRAWN: D. SHEETZ
CHECKED: C. OBRIEN CHECKED: B. WRIGHT

BRIDGE NO.207
OVER WHITE RIVER
HAMILTON COUNTY

Headquarters
8450 WESTFIELD BLVD., SUITE 300
INDIANAPOLIS, IN. 46240-8302
TEL 317-713-4615
FAX 317-713-4616
www.BFSEngr.com

BE&S Butler Fairman & Seufert CIVIL ENGINEERS

Branch Locations
FORT WAYNE 260-459-1532
LOUISVILLE 502-593-1996
LAFAYETTE 765-423-5602
MERRILLVILLE 219-769-2333
PLAINFIELD 317-839-3242

HORIZONTAL SCALE	BRIDGE FILE
AS NOTED	HAMILTON 207
VERTICAL SCALE	DESIGNATION
AS NOTED	

SURVEY BOOK	SHEET		
ELECTRONIC	40	OF	59
CONTRACT	PROJECT		
	PB-18-0001		

BFS NO. 6063

H:\606300.0000\ProjDevelopment\Design\Drawings\606387T2.dwg Donald Sheetz Plot:6/25/2018 1:38 PM Saved:6/20/2018 3:03 PM

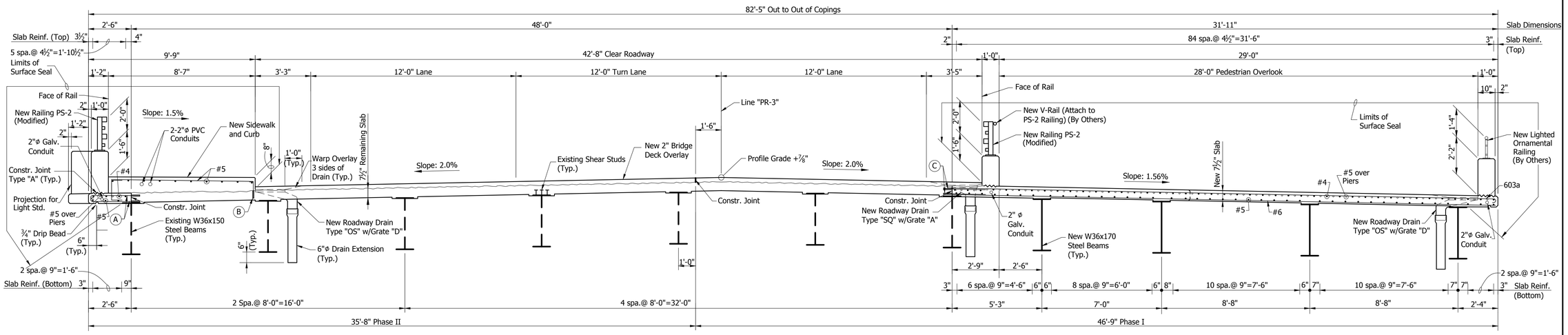

Ⓐ 602a Dowels set in 6¾" Deep Field Drilled Holes with an Approved Anchor System (Min. Pullout = 26400 Lbs.)

Ⓑ 502a Dowels set in 5¾" Deep Field Drilled Holes with an Approved Anchor System (Min. Pullout = 18600 Lbs.)

Ⓒ #6x3'-3" Dowels set in 6¾" Deep Field Drilled Holes with an Approved Anchor System (Min. Pullout = 26400 Lbs.)

SECTION "B-B"

Scale: ⅜"=1'-0"

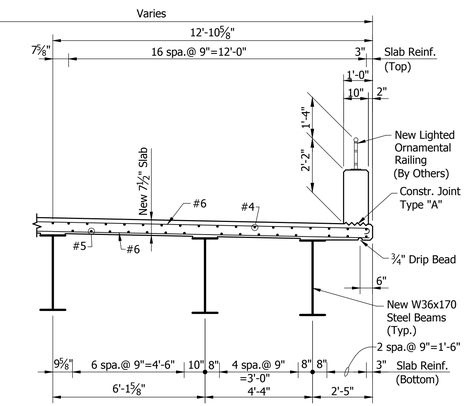

SECTION "C-C"

Scale: ⅜"=1'-0"

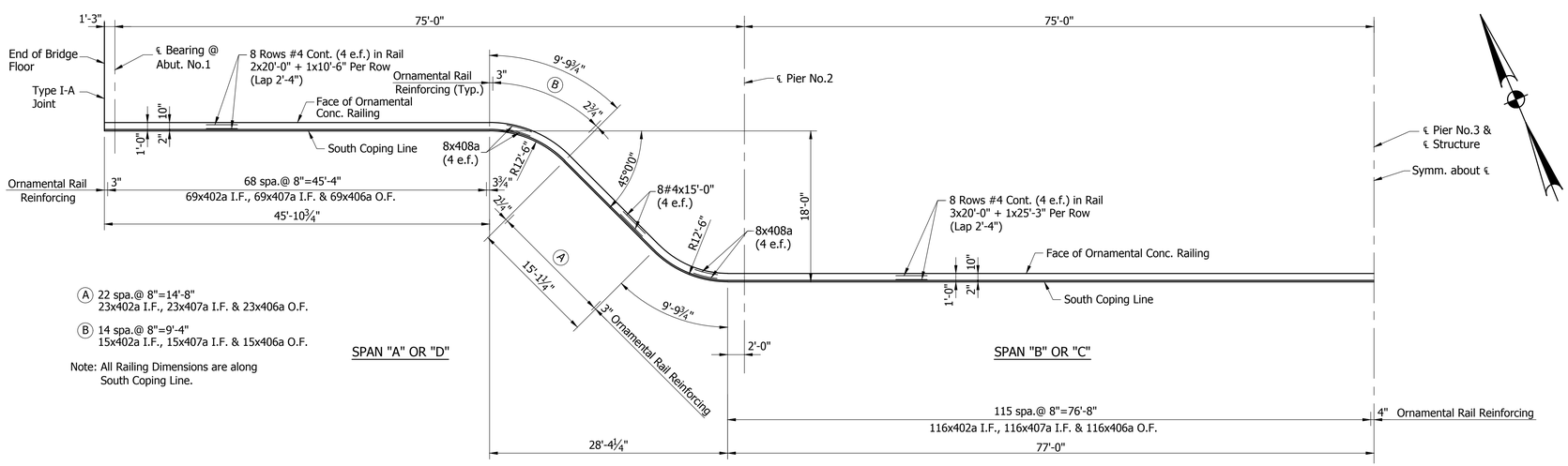

Ⓐ 22 spa.@ 8"=14'-8"
23x402a I.F., 23x407a I.F. & 23x406a O.F.

Ⓑ 14 spa.@ 8"=9'-4"
15x402a I.F., 15x407a I.F. & 15x406a O.F.

Note: All Railing Dimensions are along South Coping Line.

SPAN "A" OR "D"

SPAN "B" OR "C"

PLAN
ORNAMENTAL RAILING DETAIL ALONG SOUTH COPING
SPAN "A" AND "B" (SHOWN)
SPAN "C" AND "D" (OPP. HAND)

Scale: ⅛"=1'-0"

FLOOR DETAILS

NOTE
See Sheet 42 for Bar Bending Details and Bills of Materials.

BRYAN WRIGHT REGISTERED No. PE11100630 STATE OF INDIANA PROFESSIONAL ENGINEER

RECOMMENDED FOR APPROVAL: DESIGN ENGINEER 4/24/2018 DATE

DESIGNED: B. WRIGHT DRAWN: D. SHEETZ
CHECKED: C. OBRIEN CHECKED: B. WRIGHT

BRIDGE NO.207
OVER WHITE RIVER
HAMILTON COUNTY

Headquarters
8450 WESTFIELD BLVD., SUITE 300
INDIANAPOLIS, IN. 46240-8302
TEL 317-713-4615
FAX 317-713-4616
www.BFSEngr.com

Butler Fairman & Seufert CIVIL ENGINEERS

Branch Locations
FORT WAYNE 260-459-1532
LOUISVILLE 502-593-1996
LAFAYETTE 765-423-5602
MERRILLVILLE 219-769-2333
PLAINFIELD 317-839-3242

HORIZONTAL SCALE	BRIDGE FILE
AS NOTED	HAMILTON 207
VERTICAL SCALE	DESIGNATION
AS NOTED	
SURVEY BOOK	SHEET
ELECTRONIC	41 OF 59
CONTRACT	PROJECT
	PB-18-0001

BFS NO. 6063

H:\600-300.0000\Proj\Development\Design\Drawings\6063B772A.dwg Donald Sheetz Plot:6/25/2018 1:38 PM Save:6/20/2018 3:04 PM

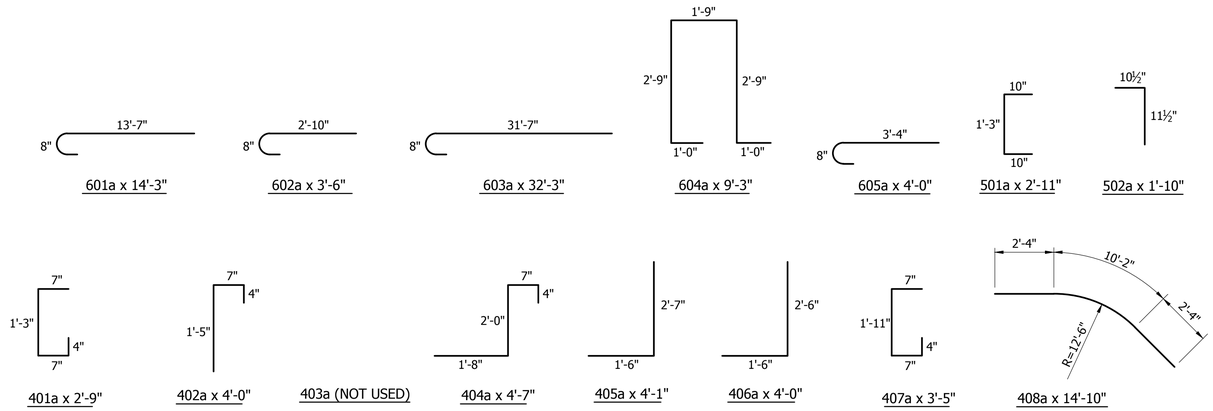

BAR BENDING DETAILS

Not to Scale

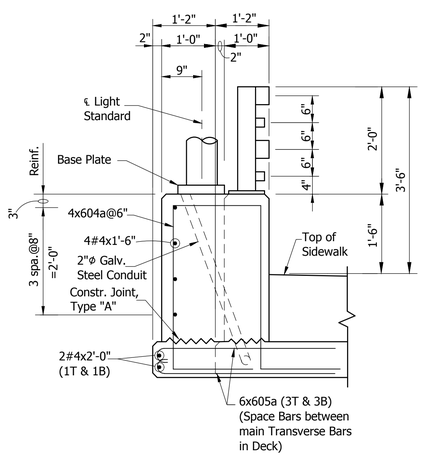

SECTION

Note:
See Standard Drawing 807-BLIT-01 for Additional Information.

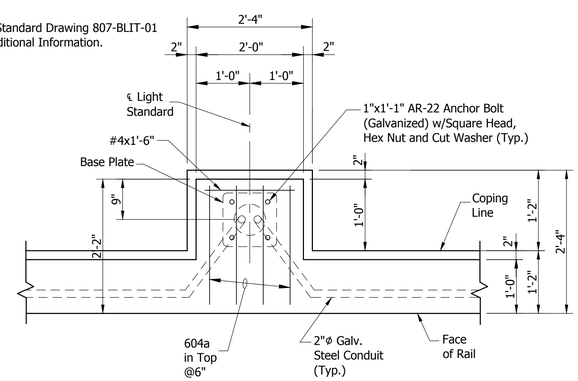

PLAN

DETAILS AT LIGHT STANDARD

Not to Scale

BILL OF MATERIALS SUPERSTRUCTURE PHASE I

REINFORCING BARS			
Mark or Size	No. of Bars	Length (Ft.)	Weight (Lbs.)
601a	198	14'-3"	
603a	206	32'-3"	
#6	206	31'-6"	
#6	64	30'-0"	
#6	36	28'-3"	
#6	122	13'-6"	
#6	808	3'-3"	
Total #6 (Epoxy Coated)			34792
#5	42	23'-9"	
#5	18	23'-6"	
#5	84	22'-3"	
#5	667	20'-0"	
#5	23	19'-0"	
#5	36	4'-6"	
Total #5 (Epoxy Coated)			17969
402a	476	4'-0"	
406a	476	4'-0"	
407a	476	3'-5"	
408a	32	14'-10"	
#4	16	25'-3"	
#4	648	20'-0"	
#4	19	15'-6"	
#4	16	15'-0"	
#4	24	13'-3"	
#4	16	10'-6"	
#4	40	4'-6"	
Total #4 (Epoxy Coated)			13676
Total Steel (Epoxy Coated)			66437

CONCRETE	
Class "C" in Superstructure	
Slab and End Bents	211.2 Cys.
Total Class "C"	211.2 Cys.
Railing, Concrete, PS-2	21.0 Cys.

MISCELLANEOUS	
Surface Seal	9962 Sft.
Threaded Tie Bar Assemblies	
(#5x3'-0" Ea. Way) (Epoxy Coated)	66 Each
Railing PS-2	302.5 Lft.
Field Drilled Holes in Concrete	808 Each
Bridge Deck Overlay	562 Sys.
Surface Milling	567 Sys.
Hydrodemolition	567 Sys.
2"ϕ Galvinazed Steel Conduit	700 Lft.
6"ϕ Drain Pipe Casting Extension	6 Each
Cast Iron Roadway Drains	
Type "OS-D"	4 Each
Additional Bridge Deck Overlay	4.0 Cys.
Cast Iron Roadway Drains	
Type "SQ-A"	2 Each

BILL OF MATERIALS SUPERSTRUCTURE PHASE II

REINFORCING BARS			
Mark or Size	No. of Bars	Length (Ft.)	Weight (Lbs.)
602a	808	3'-6"	
604a	20	9'-3"	
605a	30	4'-0"	
#6	36	35'-3"	
Total #6 (Epoxy Coated)			6612
501a	303	2'-11"	
502a	303	1'-10"	
#5	2	23'-9"	
#5	13	23'-6"	
#5	4	22'-3"	
#5	214	20'-0"	
#5	303	8'-3"	
#5	72	4'-6"	
Total #5 (Epoxy Coated)			9371
401a	454	2'-9"	
404a	454	4'-7"	
405a	454	4'-1"	
#4	192	20'-0"	
#4	8	19'-6"	
#4	4	15'-6"	
#4	90	4'-6"	
#4	10	2'-0"	
#4	20	1'-6"	
Total #4 (Epoxy Coated)			6477
Total Steel (Epoxy Coated)			22460

CONCRETE	
Class "C" in Superstructure	
Sidewalk	89.1 Cys.
Slab and End Bents	42.0 Cys.
Total Class "C"	131.1 Cys.
Railing, Concrete, PS-2	28.6 Cys.

MISCELLANEOUS	
Surface Seal	5004 Sft.
Threaded Tie Bar Assemblies	
(#5x3'-0" Ea. Way) (Epoxy Coated)	36 Each
Railing PS-2	302.5 Lft.
Field Drilled Holes in Concrete	1111 Each
Bridge Deck Overlay	867 Sys.
Surface Milling	752 Sys.
Hydrodemolition	752 Sys.
2"ϕ Galvinazed Steel Conduit	345 Lft.
6"ϕ Drain Pipe Casting Extension	2 Each
Cast Iron Roadway Drains	
Type "OS-D"	2 Each
Additional Bridge Deck Overlay	6.0 Cys.

BILL OF MATERIALS SUPERSTRUCTURE PHASE III

REINFORCING BARS			
Mark or Size	No. of Bars	Length (Ft.)	Weight (Lbs.)
401a	454	2'-9"	
402a	454	4'-0"	
#4	96	20'-0"	
#4	6	19'-6"	
#4	454	1'-9"	
Total Steel (Epoxy Coated)			3939

CONCRETE	
Railing, Concrete, PS-2 (Modified)	16.8 Cys.

MISCELLANEOUS	
Ornamental Railing	302.5 Lft.
Field Drilled Holes in Concrete	908 Each
Surface Seal	1207 Sft.

⊕ A.S.T.M. A615, Grade 60

FLOOR DETAILS

BRYAN WRIGHT REGISTERED No. PE11100630 STATE OF INDIANA PROFESSIONAL ENGINEER

RECOMMENDED FOR APPROVAL: 4/24/2018
DESIGN ENGINEER DATE

DESIGNED: B. WRIGHT DRAWN: D. SHEETZ
CHECKED: C. OBRIEN CHECKED: B. WRIGHT

BRIDGE NO.207
OVER WHITE RIVER
HAMILTON COUNTY

Headquarters
8450 WESTFIELD BLVD., SUITE 300
INDIANAPOLIS, IN. 46240-8302
TEL 317-713-4615
FAX 317-713-4616
www.BFSEngr.com

Butler Fairman & Seufert CIVIL ENGINEERS

Branch Locations
FORT WAYNE 260-459-1532
LOUISVILLE 502-593-1996
LAFAYETTE 765-423-5602
MERRILLVILLE 219-769-2333
PLAINFIELD 317-839-3242

HORIZONTAL SCALE	BRIDGE FILE
AS NOTED	HAMILTON 207
VERTICAL SCALE	DESIGNATION
AS NOTED	
SURVEY BOOK	SHEET
ELECTRONIC	42 OF 59
CONTRACT	PROJECT
	PB-18-0001

BFS NO. 6063

H:\606300.0000\Pro_Development\Design\Drawings\606397T3.dwg Donald Sheetz Plot:6/25/2018 1:38 PM Save:6/20/2018 3:06 PM

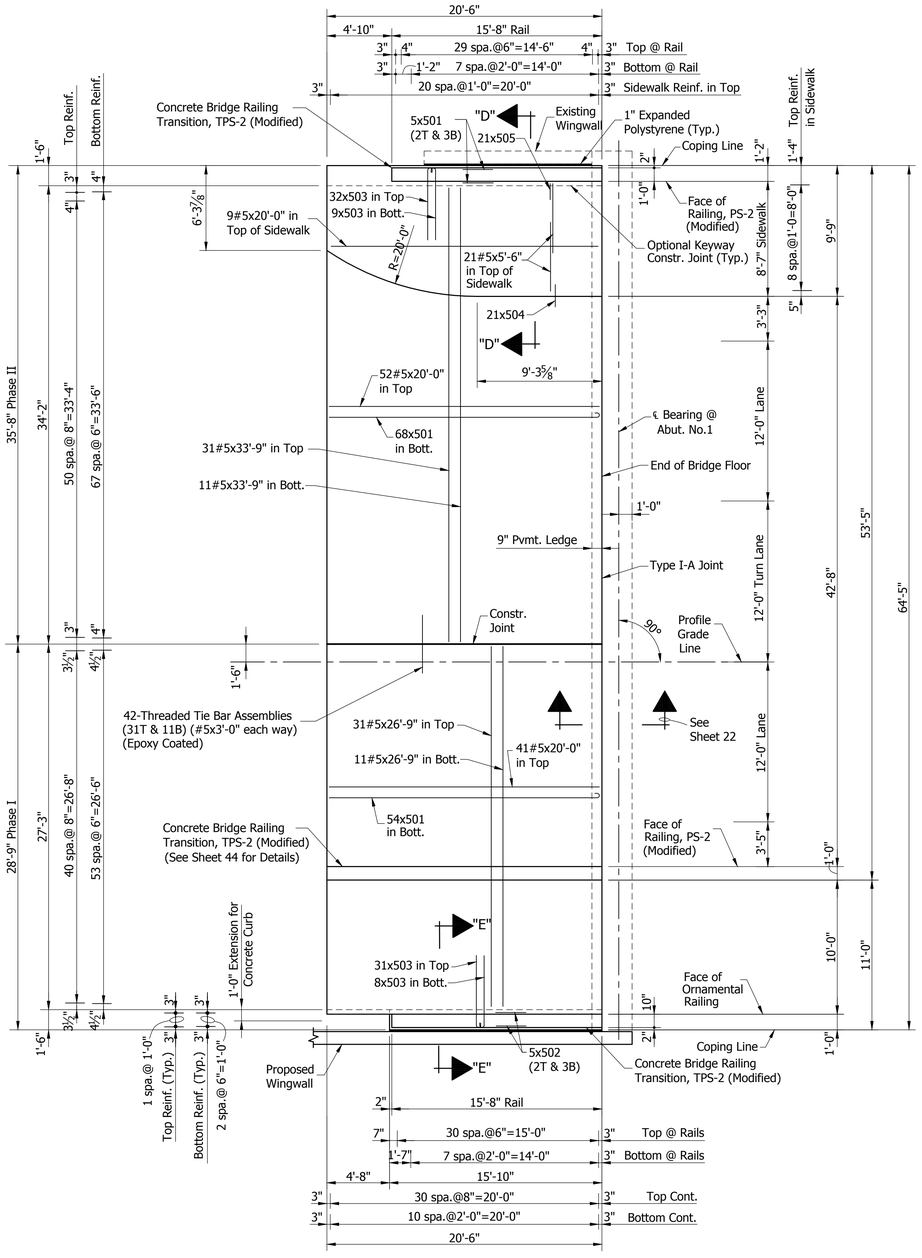

PLAN
WEST SLAB
Scale: 3/16"=1'-0"

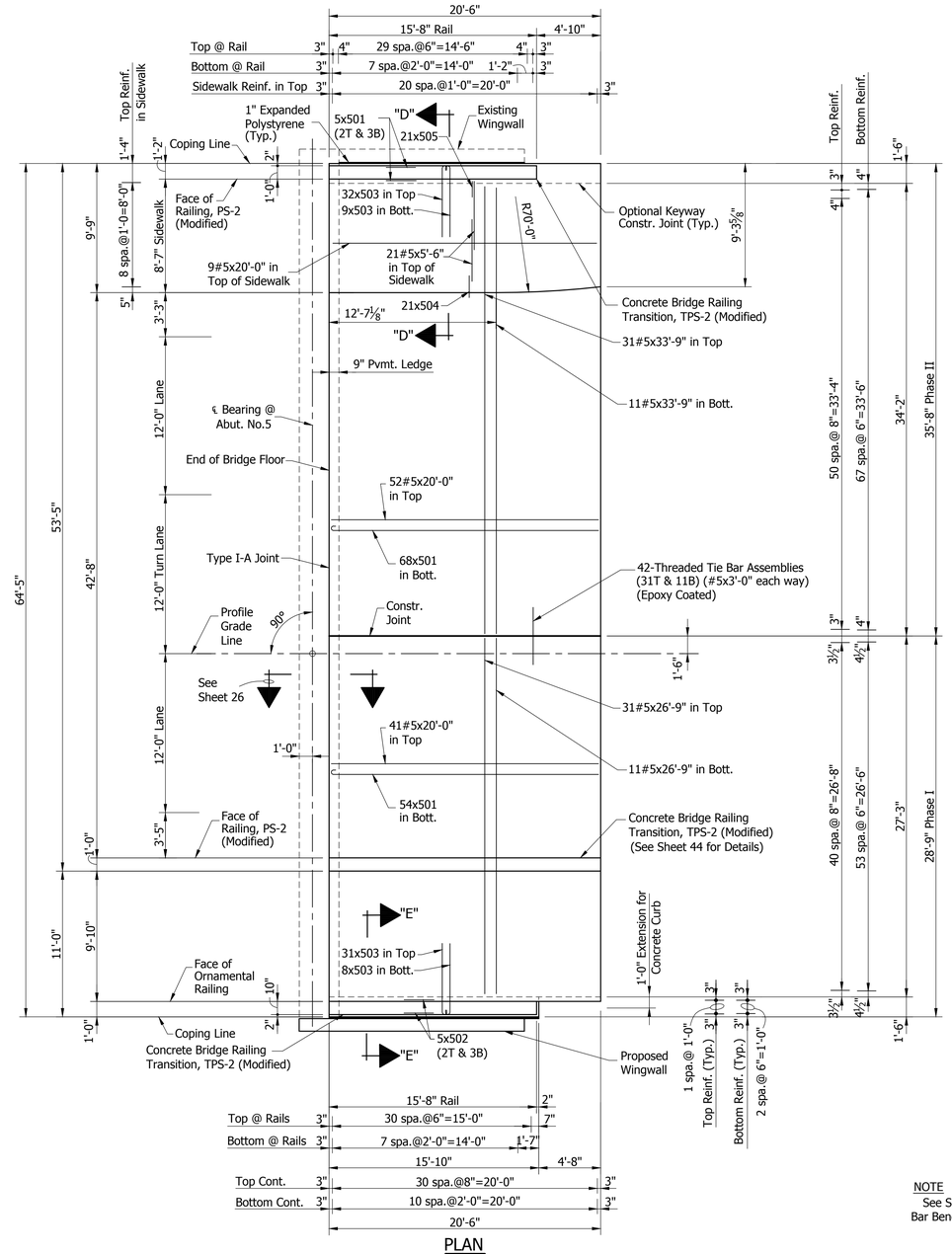

PLAN
EAST SLAB
Scale: 3/16"=1'-0"

NOTE
See Sheet 45 for Sections "D-D" and "E-E", Bar Bending Details and Bills of Materials.

APPROACH SLAB DETAILS

BRYAN WRIGHT REGISTERED No. PE11100630 STATE OF INDIANA PROFESSIONAL ENGINEER

RECOMMENDED FOR APPROVAL: 4/24/2018
DESIGN ENGINEER DATE

DESIGNED: D. SHEETZ DRAWN: D. SHEETZ
CHECKED: B. WRIGHT CHECKED: B. WRIGHT

BRIDGE NO.207
OVER WHITE RIVER
HAMILTON COUNTY

Headquarters
8450 WESTFIELD BLVD., SUITE 300
INDIANAPOLIS, IN. 46240-8302
TEL 317-713-4615
FAX 317-713-4616
www.BFSEngr.com

Butler Fairman & Seufert CIVIL ENGINEERS

Branch Locations
FORT WAYNE 260-459-1532
LOUISVILLE 502-593-1996
LAFAYETTE 765-423-5602
MERRILLVILLE 219-769-2333
PLAINFIELD 317-839-3242

HORIZONTAL SCALE	BRIDGE FILE
AS NOTED	HAMILTON 207
VERTICAL SCALE	DESIGNATION
AS NOTED	
SURVEY BOOK	SHEET
ELECTRONIC	43 OF 59
CONTRACT	PROJECT
	PB-18-0001

BFS NO. 6063

H:\606300.0000\ProDevelopment\Design\Drawings\606389781.dwg Donald Sheetz Plot:6/25/2018 1:38 PM Save:4/25/2018 10:54 AM

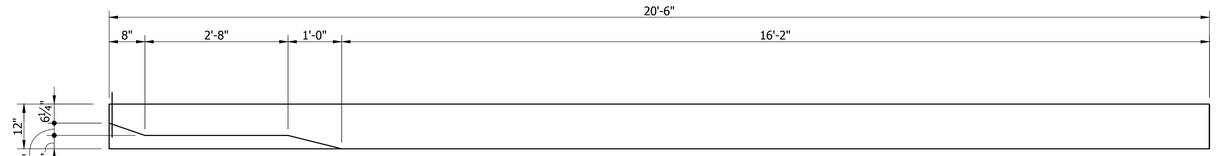

PLAN

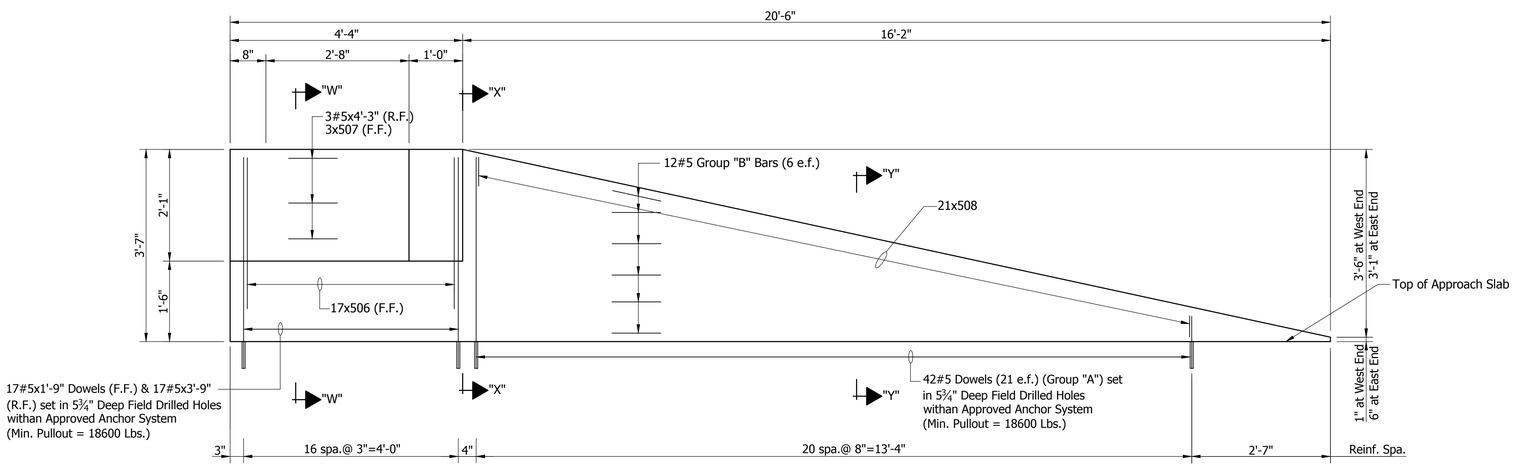

ELEVATION

CONCRETE BRIDGE RAILING TRANSITION, TYPE TPS-2 (MODIFIED)

Scale: ¾"=1'-0"

Note: See Standard Drawing E706-TTPP-07 and E706-TTPP-08 for Additional Details of Concrete Bridge Railing Transition, TPS-2.

42#5 (21 e.f.) Group "A" Bars
2x3'-10"
2x3'-8"
2x3'-6"
2x3'-4"
2x3'-3"
2x3'-1"
2x2'-11"
2x2'-9"
2x2'-8"
2x2'-6"
2x2'-4"
2x2'-2"
2x2'-1"
2x1'-11"
2x1'-9"
2x1'-8"
2x1'-6"
2x1'-4"
2x1'-2"
2x1'-1"
2x11"
98.83 Ft.

12#5 (6 e.f.) Group "B" Bars
2x16'-5"
2x8'-6"
2x11'-2"
2x13'-11"
2x16'-3"
2x18'-11"
170.33 Ft.

BILL OF MATERIALS
CONCRETE BRIDGE RAILING TRANSITION, TYPE TPS-2 (MODIFIED) PHASE III

REINFORCING BARS

Mark or Size	No. of Bars	Length (Ft.)	Weight (Lbs.)
506	17	3'-0"	
507	3	4'-3"	
508	21	2'-3"	
#5	3	4'-3"	
#5	17	3'-9"	
#5	17	1'-9"	
#5	42	Group "A"	
#5	12	Group "B"	
Total Steel (Epoxy Coated)			508

MISCELLANEOUS

Surface Seal	110 Sft.
Field Drilled Holes in Concrete	76 Each
Concrete Bridge Railing Transition	
Type TPS-2 (Modified)	1 Each

⊕ A.S.T.M. A615, Grade 60

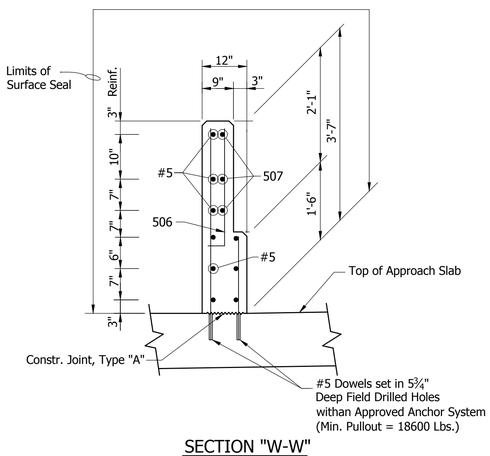

SECTION "W-W"

Scale: ¾"=1'-0"

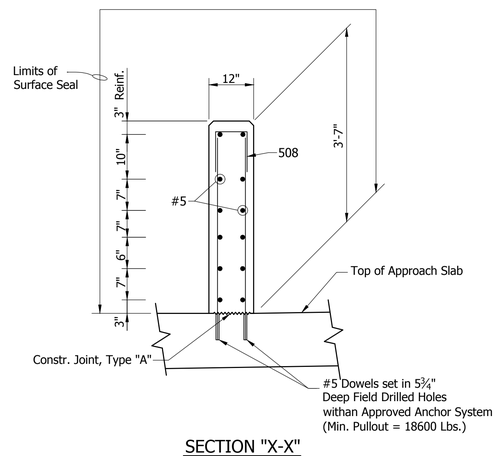

SECTION "X-X"

Scale: ¾"=1'-0"

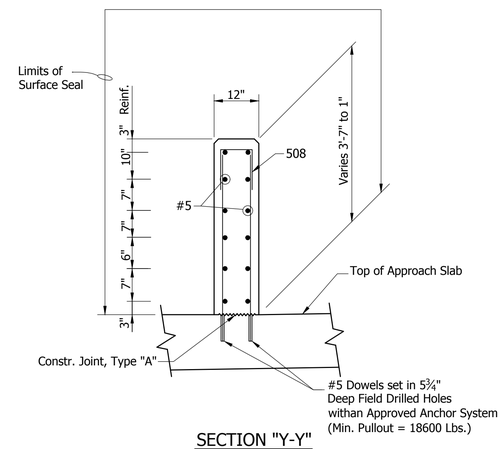

SECTION "Y-Y"

Scale: ¾"=1'-0"

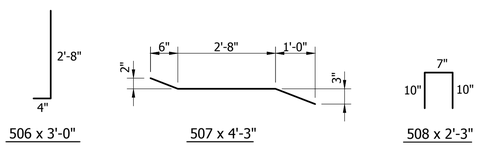

506 x 3'-0" 507 x 4'-3" 508 x 2'-3"

BAR BENDING DETAILS

Not to Scale

APPROACH SLAB DETAILS

BRYAN WRIGHT REGISTERED No. PE11100630 STATE OF INDIANA PROFESSIONAL ENGINEER

RECOMMENDED FOR APPROVAL: DESIGN ENGINEER 4/24/2018 DATE

DESIGNED: D. SHEETZ DRAWN: D. SHEETZ

CHECKED: B. WRIGHT CHECKED: B. WRIGHT

BRIDGE NO.207
OVER WHITE RIVER
HAMILTON COUNTY

Headquarters
8450 WESTFIELD BLVD., SUITE 300
INDIANAPOLIS, IN. 46240-8302
TEL 317-713-4615
FAX 317-713-4616
www.BFSEngr.com

Butler Fairman & Seufert CIVIL ENGINEERS

Branch Locations
FORT WAYNE 260-459-1532
LOUISVILLE 502-593-1996
LAFAYETTE 765-423-5602
MERRILLVILLE 219-769-2333
PLAINFIELD 317-839-3242

HORIZONTAL SCALE	BRIDGE FILE
AS NOTED	HAMILTON 207
VERTICAL SCALE	DESIGNATION
AS NOTED	
SURVEY BOOK	SHEET
ELECTRONIC	44 OF 59
CONTRACT	PROJECT
	PB-18-0001

BFS NO. 6063

H:\606300.0000\ProDevelopment\Design\Drawings\606387B1A.dwg Donald Sheetz Plot:6/25/2018 1:38 PM Save:4/24/2018 10:50 AM

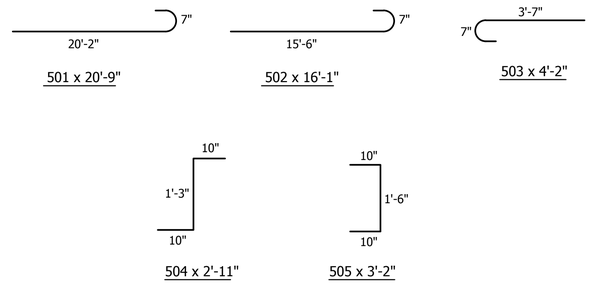

BAR BENDING DETAILS

Not to Scale

BILL OF MATERIALS
WEST APPR. SLAB
(EAST APPR. SLAB SAME)
PHASE I

REINFORCING BARS

Mark or Size	No. of Bars	Length (Ft.)	Weight (Lbs.)
501	54	20'-9"	
502	5	16'-1"	
503	39	4'-2"	
#5	42	26'-9"	
#5	41	20'-0"	
Total Steel (Epoxy Coated)			3449

CONCRETE

Reinforced Concrete Bridge Approach (12")	65 Sys.

MISCELLANEOUS

Dense Graded Subbase	11 Cys.
Threaded Tie Bar Assemblies (#5x3'-0" Ea. Way) (Epoxy Coated)	42 Each
Concrete Bridge Railing Transition, TPS-2 (Modified)	1 Each
Surface Seal	590 Sft.

BILL OF MATERIALS
WEST APPR. SLAB
(EAST APPR. SLAB SAME)
PHASE II

REINFORCING BARS

Mark or Size	No. of Bars	Length (Ft.)	Weight (Lbs.)
501	68	20'-9"	
503	41	4'-2"	
504	21	2'-11"	
505	21	3'-2"	
#5	42	33'-9"	
#5	61	20'-0"	
#5	42	5'-6"	
Total Steel (Epoxy Coated)			4775

CONCRETE

Reinforced Concrete Bridge Approach (12")	82 Sys.
Concrete, Class "C", Superstructure	4.4 Cys.

MISCELLANEOUS

Dense Graded Subbase	14 Cys.
Concrete Bridge Railing Transition, TPS-2 (Modified)	1 Each
Surface Seal	730 Sft.

⊕ A.S.T.M. A615, Grade 60

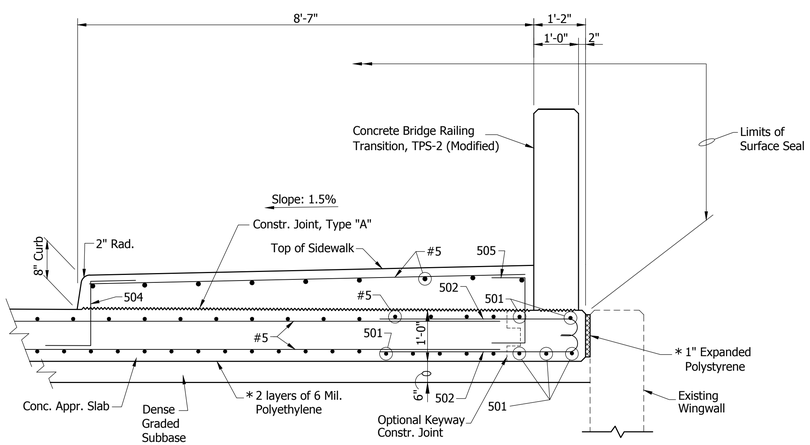

SECTION "D-D"

Not to Scale

* Include in cost of Reinforced Concrete Approach Slab

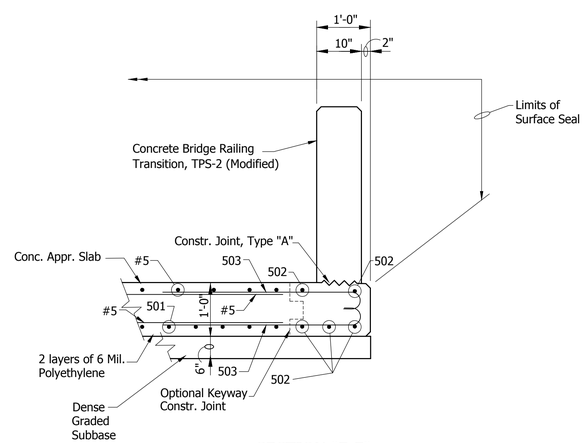

SECTION "E-E"

Not to Scale

APPROACH SLAB DETAILS

BRYAN WRIGHT REGISTERED No. PE11100630 STATE OF INDIANA PROFESSIONAL ENGINEER

RECOMMENDED FOR APPROVAL: DESIGN ENGINEER 4/24/2018 DATE

DESIGNED: D. SHEETZ DRAWN: D. SHEETZ

CHECKED: B. WRIGHT CHECKED: B. WRIGHT

BRIDGE NO.207
OVER WHITE RIVER
HAMILTON COUNTY

Headquarters
8450 WESTFIELD BLVD., SUITE 300
INDIANAPOLIS, IN. 46240-8302
TEL 317-713-4615
FAX 317-713-4616
www.BFSEngr.com

Branch Locations
FORT WAYNE 260-459-1532
LOUISVILLE 502-593-1996
LAFAYETTE 765-423-5602
MERRILLVILLE 219-769-2333
PLAINFIELD 317-839-3242

Butler Fairman & Seufert
CIVIL ENGINEERS

HORIZONTAL SCALE	BRIDGE FILE
AS NOTED	HAMILTON 207
VERTICAL SCALE	DESIGNATION
AS NOTED	
SURVEY BOOK	SHEET
ELECTRONIC	45 OF 59
CONTRACT	PROJECT
	PB-18-0001

BFS NO. 6063

H:\606300.0000\ProjDevelopment\Design\Drawings\606300782.dwg Donald Sheetz Plot:6/25/2018 1:38 PM Save:6/20/2018 3:07 PM

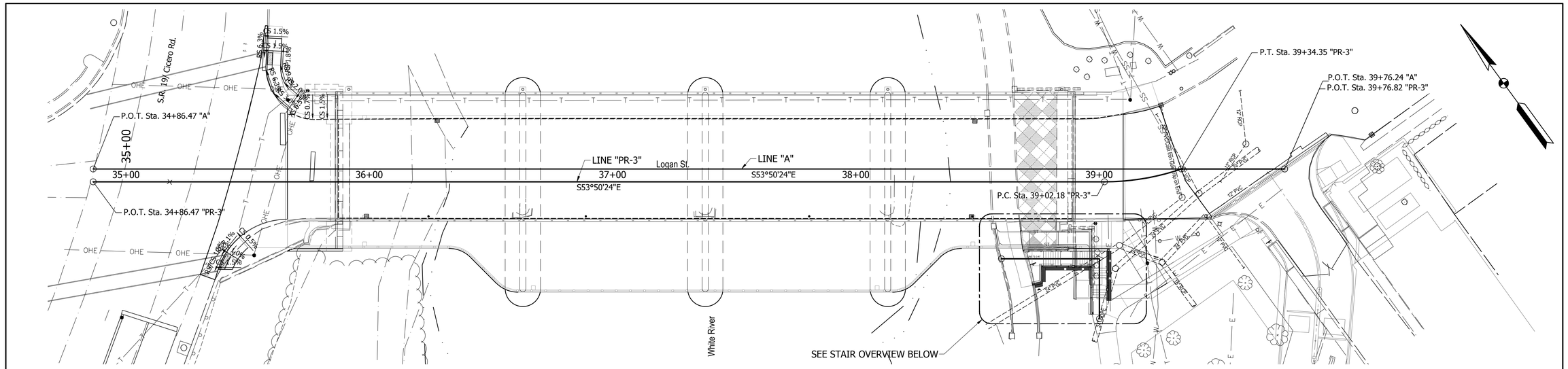

PROJECT OVERVIEW

Scale: 1" = 20'

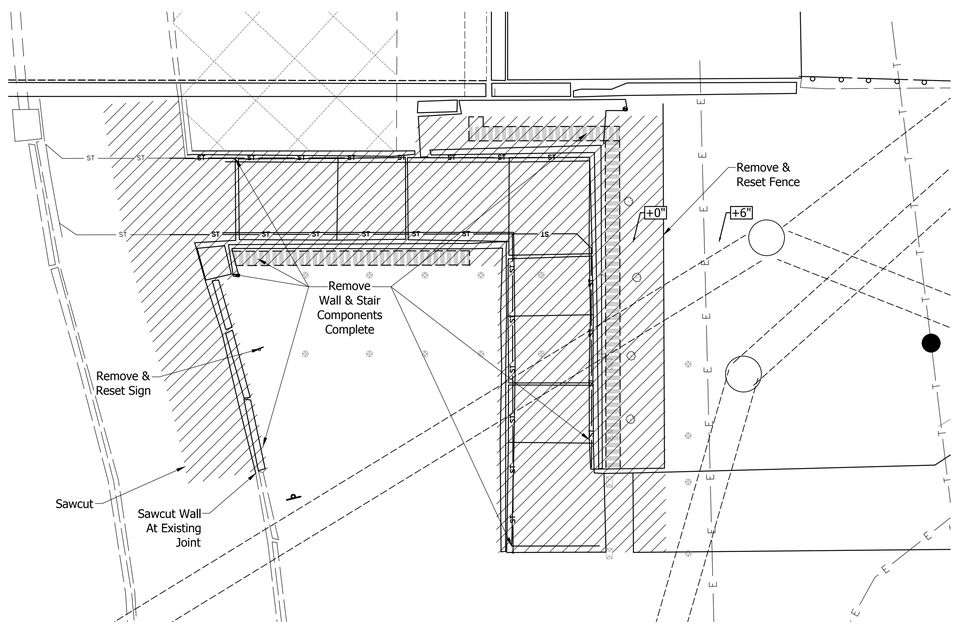

EXISTING STAIR DEMO

Scale: 1" = 5'

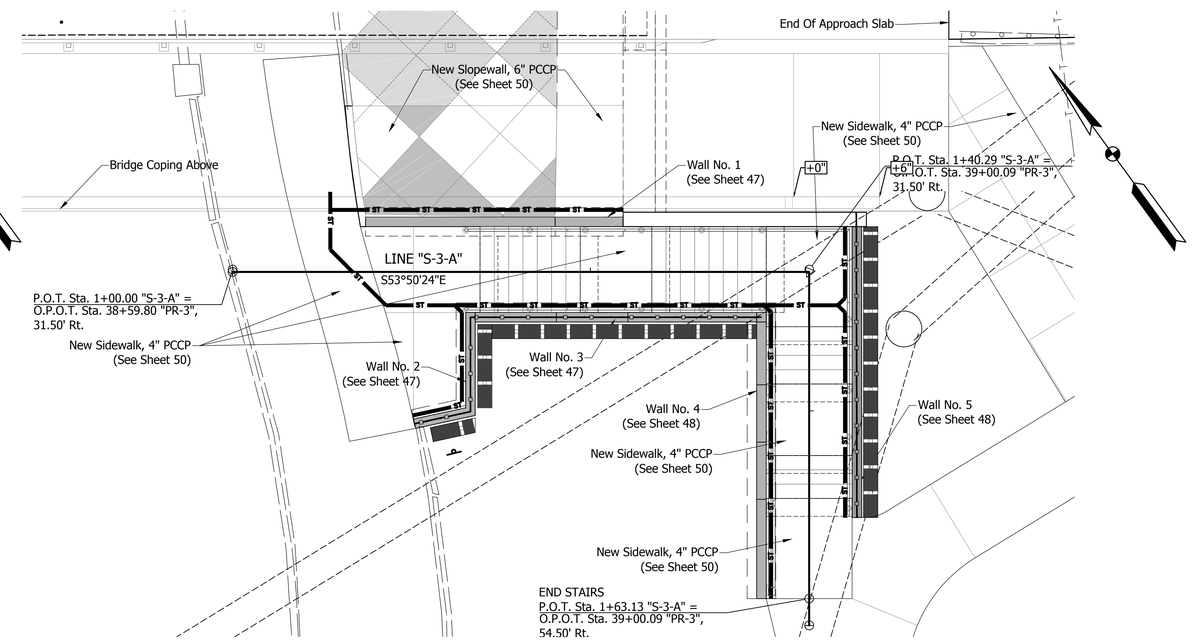

PROPOSED STAIR OVERVIEW

Scale: 1" = 5'

STAIR OVERVIEW

H:\606300.0000\ProjDevelopment\Design\Drawings\606300821.dwg Donald Sheetz Plot:6/25/2018 1:39 PM Save:6/25/2018 9:55 AM

BRYAN WRIGHT REGISTERED No. PE11100630 STATE OF INDIANA PROFESSIONAL ENGINEER

RECOMMENDED FOR APPROVAL: DESIGN ENGINEER 4/24/2018 DATE

DESIGNED: B. WRIGHT DRAWN: L. KIRSCH

CHECKED: M. EICHENAUER CHECKED: B. WRIGHT

BRIDGE NO.207
OVER WHITE RIVER
HAMILTON COUNTY

Headquarters
8450 WESTFIELD BLVD., SUITE 300
INDIANAPOLIS, IN. 46240-8302
TEL 317-713-4615
FAX 317-713-4616
www.BFSEngr.com

BF&S Butler Fairman & Seufert CIVIL ENGINEERS

Branch Locations
FORT WAYNE 260-459-1532
LOUISVILLE 502-593-1996
LAFAYETTE 765-423-5602
MERRILLVILLE 219-769-2333
PLAINFIELD 317-839-3242

HORIZONTAL SCALE	BRIDGE FILE
AS NOTED	HAMILTON 207
VERTICAL SCALE	DESIGNATION
N/A	

SURVEY BOOK	SHEET		
ELECTRONIC	46	OF	59
CONTRACT	PROJECT		
	PB-18-0001		

BFS NO. 6063

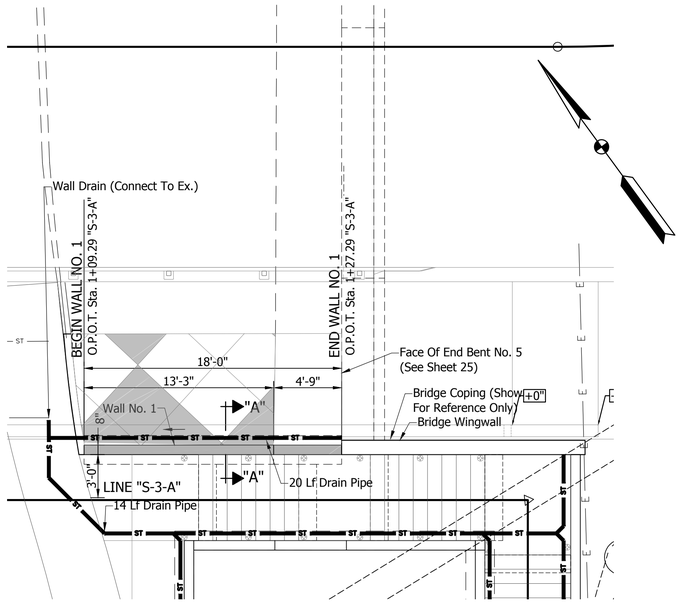

WALL NO. 1 PLAN

Scale: 1" = 5'

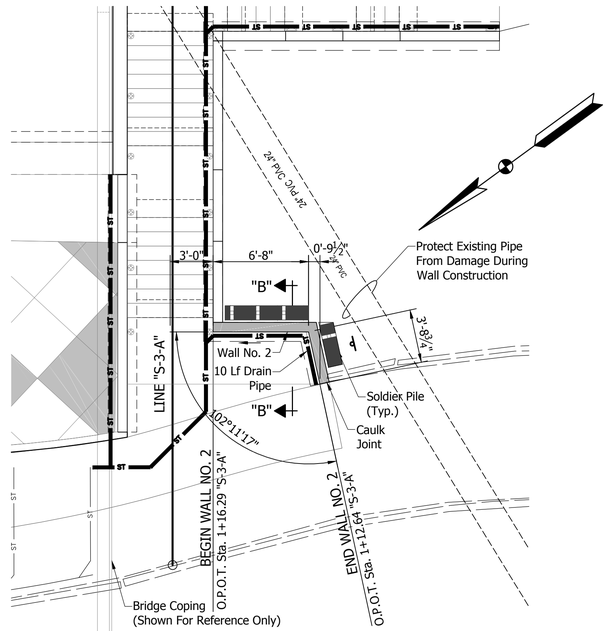

WALL NO. 2 PLAN

Scale: 1" = 5'

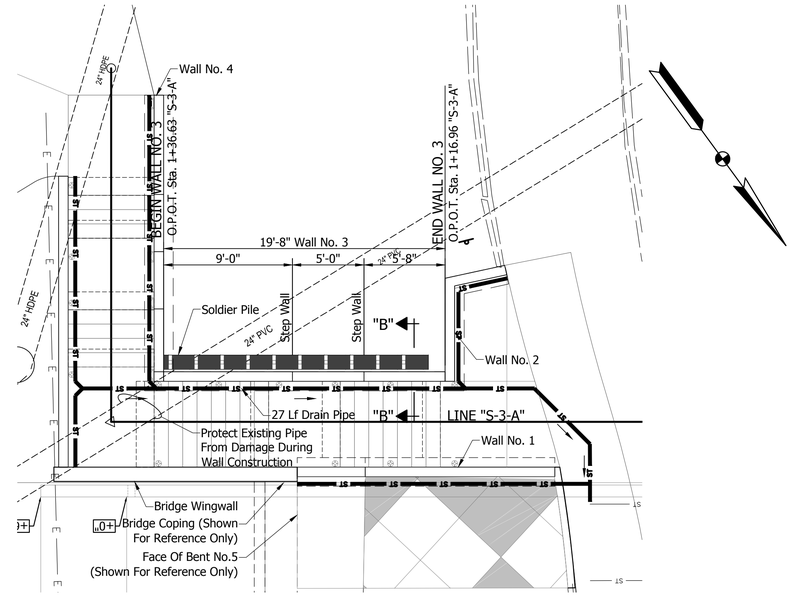

WALL NO. 3 PLAN

Scale: 1" = 5'

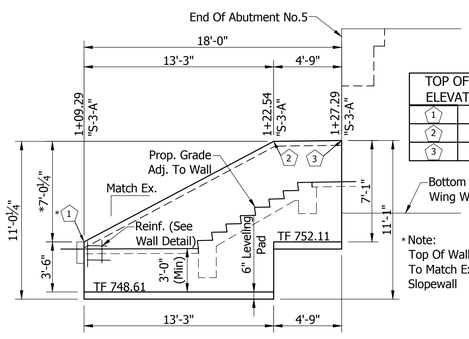

TOP OF WALL ELEVATIONS	
1	752.11
2	759.13
3	759.19

*Note:
Top Of Wall Slope
To Match Existing
Slopewall

WALL NO. 1 ELEVATION

Scale: 1" = 5'

BILL OF MATERIALS
WALL NO.1

Face Panel Wire	113 Sft.
Wall Erection	113 Sft.
Concrete Facing	113 Sft.
Leveling Pad, Concrete	18 Lft.
No.8 Stone	68 Cys.
6" Perforated Drain Pipe	34 Lft.

Notes:
Excavation for walls included in Earthwork Summary. See Geotechnical Report for Additional Information.

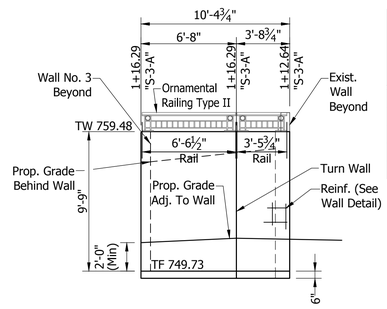

WALL NO. 2 ELEVATION

Scale: 1" = 5'

BILL OF MATERIALS
WALL NO.2

Cut Wall	101 Sft.
Compacted Aggregate No.53	0.3 Cys.
6" Perforated Drain Pipe	10 Lft.
Ornamental Railing Type II	10.0 Lft.

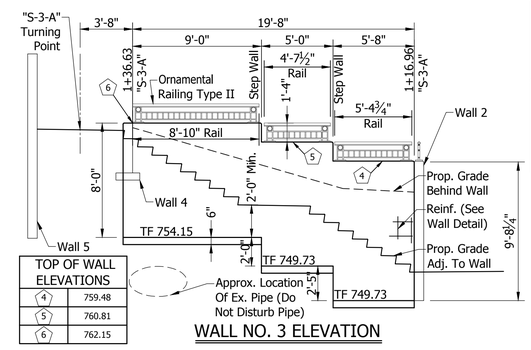

TOP OF WALL ELEVATIONS	
4	759.48
5	760.81
6	762.15

WALL NO. 3 ELEVATION

Scale: 1" = 5'

BILL OF MATERIALS
WALL NO.3

Cut Wall	181 Sft.
Compacted Aggregate No.53	0.5 Cys.
6" Perforated Drain Pipe	27 Lft.
Ornamental Railing Type II	18.85 Lft.

Notes:
Excavation for walls included in Earthwork Summary. See Geotechnical Report for Additional Information.

WALL DETAILS

BRYAN WRIGHT
REGISTERED
No. PE11100630
STATE OF INDIANA
PROFESSIONAL ENGINEER

RECOMMENDED FOR APPROVAL: DESIGN ENGINEER — DATE 4/24/2018

DESIGNED: B. WRIGHT DRAWN: L. KIRSCH
CHECKED: M. EICHENAUER CHECKED: B. WRIGHT

BRIDGE NO.207
OVER WHITE RIVER
HAMILTON COUNTY

Headquarters
8450 WESTFIELD BLVD., SUITE 300
INDIANAPOLIS, IN. 46240-8302
TEL 317-713-4615
FAX 317-713-4616
www.BFSEngr.com

Butler Fairman & Seufert CIVIL ENGINEERS

Branch Locations
FORT WAYNE 260-459-1532
LOUISVILLE 502-593-1996
LAFAYETTE 765-423-5602
MERRILLVILLE 219-769-2333
PLAINFIELD 317-839-3242

HORIZONTAL SCALE	BRIDGE FILE
AS NOTED	HAMILTON 207
VERTICAL SCALE	DESIGNATION
N/A	

SURVEY BOOK	SHEET
ELECTRONIC	47 OF 59
CONTRACT	PROJECT
	PB-18-0001

BFS NO. 6063

H:\606300.0000\ProDevelopment\Design\Drawings\6063821.dwg Donald Sheetz Plot:6/25/2018 1:39 PM Save:6/25/2018 9:55 AM

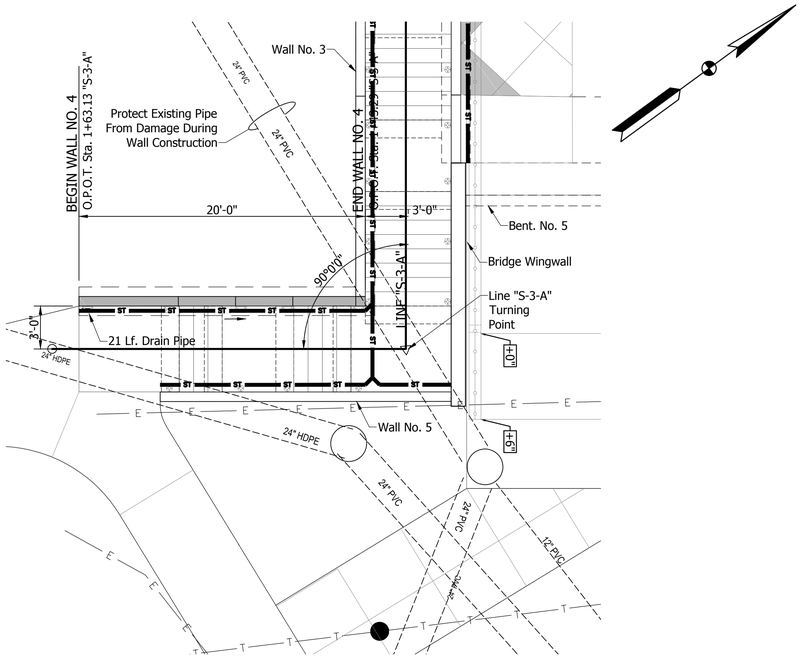

WALL NO. 4 PLAN

Scale: 1" = 5'

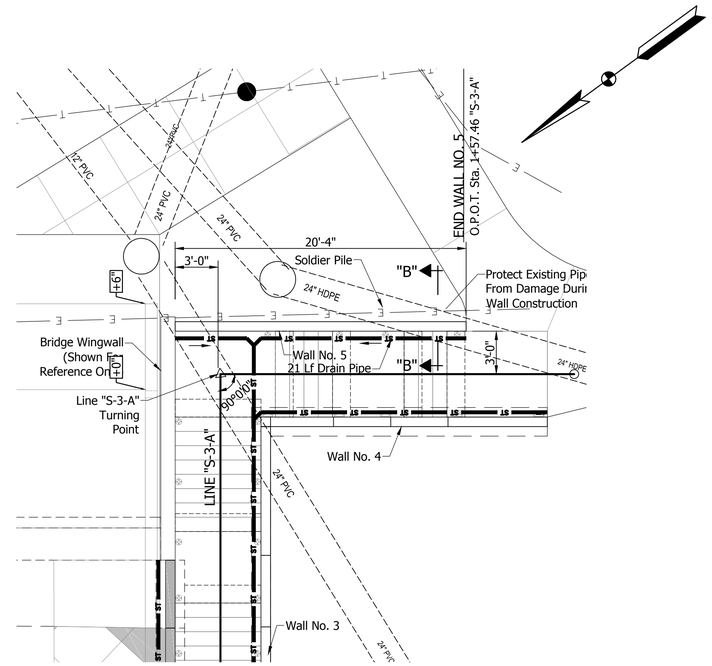

WALL NO. 5 PLAN

Scale: 1" = 5'

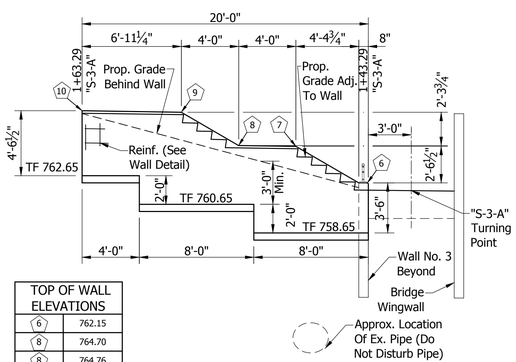

TOP OF WALL ELEVATIONS	
6	762.15
8	764.70
8	764.76
9	767.09
10	767.20

WALL NO. 4 ELEVATION

Scale: 1" = 5'

BILL OF MATERIALS WALL NO.4	
Face Panel Wire	83 Sft.
Wall Erection	83 Sft.
Concrete Facing	83 Sft.
Leveling Pad, Concrete	20 Lft.
No.8 Stone	38 Cys.
6" Perforated Drain Pipe	21 Lft.

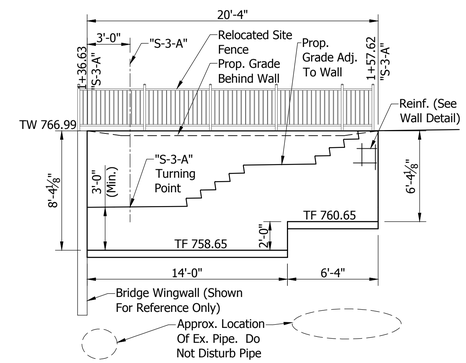

WALL NO. 5 ELEVATION

Scale: 1" = 5'

BILL OF MATERIALS WALL NO.5	
Cut Wall	136 Sft.
Compacted Aggregate No.53	1.2 Cys
6" Perforated Drain Pipe	21 Lft.
Reset Existing Fence	21 Lft.

Notes: Excavation for walls included in Earthwork Summary
See Geotechnical Report for Additional Information.

Notes:
Excavation for walls included in Earthwork Summary. See Geotechnical Report for Additional Information.

WALL DETAILS

BRYAN WRIGHT REGISTERED No. PE11100630 STATE OF INDIANA PROFESSIONAL ENGINEER

RECOMMENDED FOR APPROVAL: 4/24/2018
DESIGN ENGINEER DATE

DESIGNED: B. WRIGHT DRAWN: L. KIRSCH
CHECKED: M. EICHENAUER CHECKED: B. WRIGHT

BRIDGE NO.207
OVER WHITE RIVER
HAMILTON COUNTY

Headquarters
8450 WESTFIELD BLVD., SUITE 300
INDIANAPOLIS, IN. 46240-8302
TEL 317-713-4615
FAX 317-713-4616
www.BFSEngr.com

BF&S Butler Fairman & Seufert CIVIL ENGINEERS

Branch Locations
FORT WAYNE 260-459-1532
LOUISVILLE 502-593-1996
LAFAYETTE 765-423-5602
MERRILLVILLE 219-769-2333
PLAINFIELD 317-839-3242

HORIZONTAL SCALE	BRIDGE FILE
AS NOTED	HAMILTON 207
VERTICAL SCALE	DESIGNATION
N/A	

SURVEY BOOK	SHEET		
ELECTRONIC	48	OF	59
CONTRACT	PROJECT		
	PB-18-0001		

BFS NO. 6063

H:\606300.0000\ProjDevelopment\Design\Drawings\606300821.dwg Donald Sheetz Plot:6/25/2018 1:40 PM Save:6/25/2018 9:55 AM

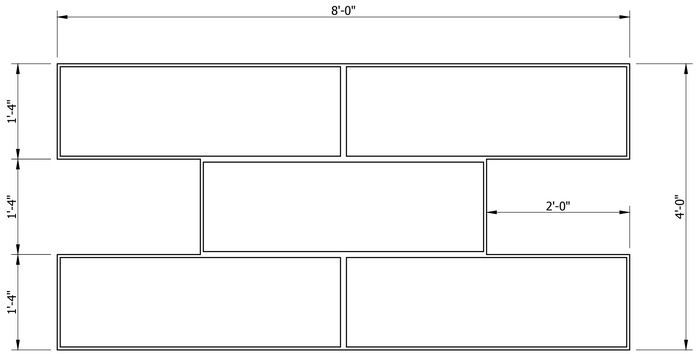

FORM LINER DETAIL PATTERN

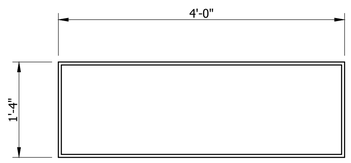

FILLER PANEL DETAIL

FORM LINER DETAIL

Scale: 1" = 1'-0"

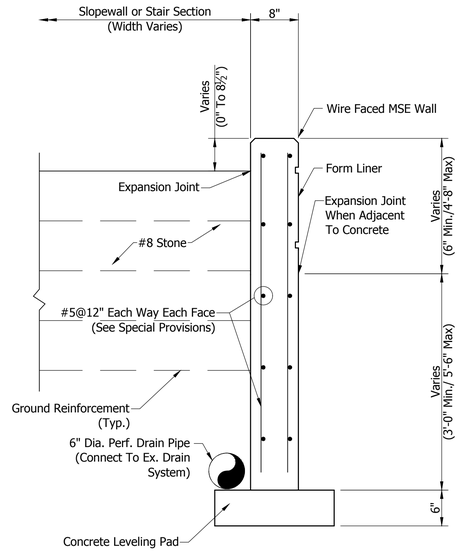

WALL DETAIL (WALLS NO. 1 & 4)

Scale: 1" = 1'-0"

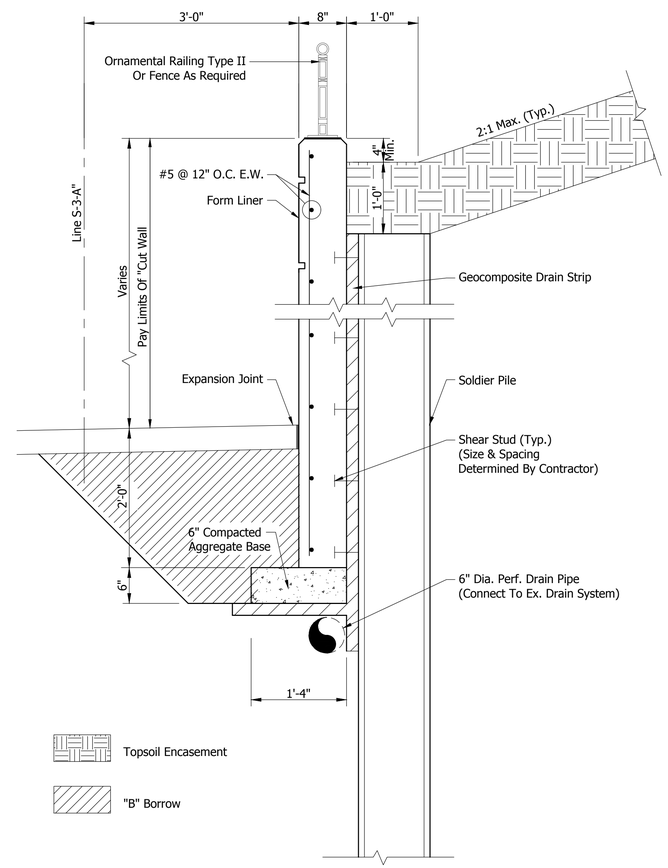

CUT WALL DETAIL (WALLS NO. 2, 3 & 5)

Scale: 1" = 1'-0"

WALL DETAILS

BRYAN WRIGHT
REGISTERED
No. PE11100630
STATE OF INDIANA
PROFESSIONAL ENGINEER

RECOMMENDED FOR APPROVAL: 4/24/2018
DESIGN ENGINEER DATE

DESIGNED: B. WRIGHT DRAWN: L. KIRSCH
CHECKED: M. EICHENAUER CHECKED: B. WRIGHT

BRIDGE NO.207
OVER WHITE RIVER
HAMILTON COUNTY

Headquarters
8450 WESTFIELD BLVD., SUITE 300
INDIANAPOLIS, IN. 46240-8302
TEL 317-713-4615
FAX 317-713-4616
www.BFSEngr.com

Branch Locations
FORT WAYNE 260-459-1532
LOUISVILLE 502-593-1996
LAFAYETTE 765-423-5602
MERRILLVILLE 219-769-2333
PLAINFIELD 317-839-3242

BFS Butler Fairman Seufert CIVIL ENGINEERS

HORIZONTAL SCALE	BRIDGE FILE
AS NOTED	HAMILTON 207
VERTICAL SCALE	DESIGNATION
N/A	
SURVEY BOOK	SHEET
ELECTRONIC	49 OF 59
CONTRACT	PROJECT
	PB-18-0001

BFS NO. 6063

H:\6706300.0000\ProjDevelopment\Design\Drawings\0063821.dwg Donald Sheetz Plot:6/25/2018 1:40 PM Save:6/25/2018 9:55 AM

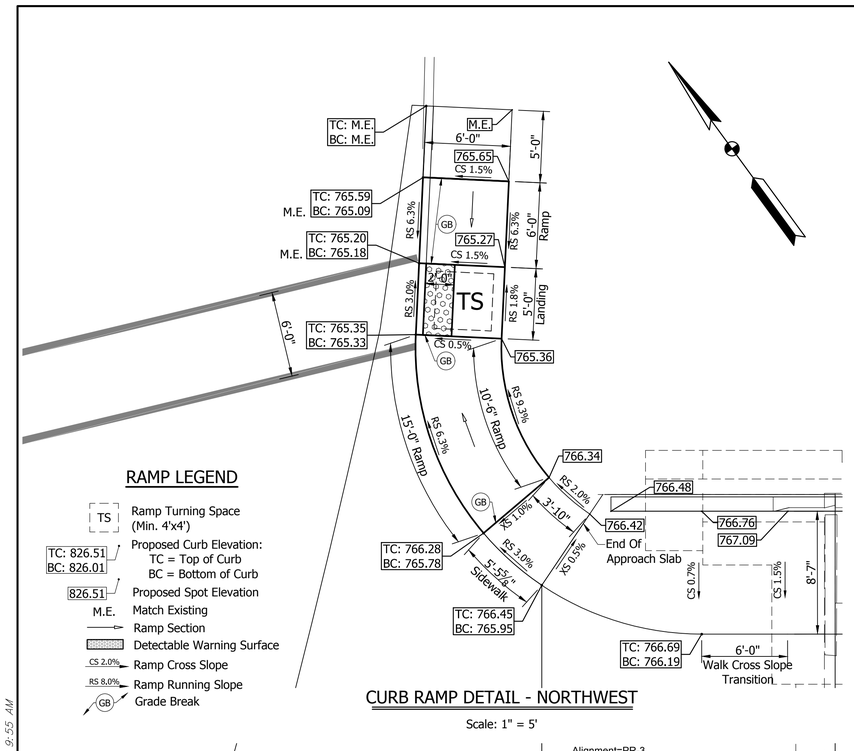

RAMP LEGEND

- TS — Ramp Turning Space (Min. 4'x4')
- TC: 826.51 / BC: 826.01 — Proposed Curb Elevation: TC = Top of Curb, BC = Bottom of Curb
- 826.51 — Proposed Spot Elevation
- M.E. — Match Existing
- Ramp Section
- Detectable Warning Surface
- CS 2.0% — Ramp Cross Slope
- RS 8.0% — Ramp Running Slope
- GB — Grade Break

CURB RAMP DETAIL - NORTHWEST

Scale: 1" = 5'

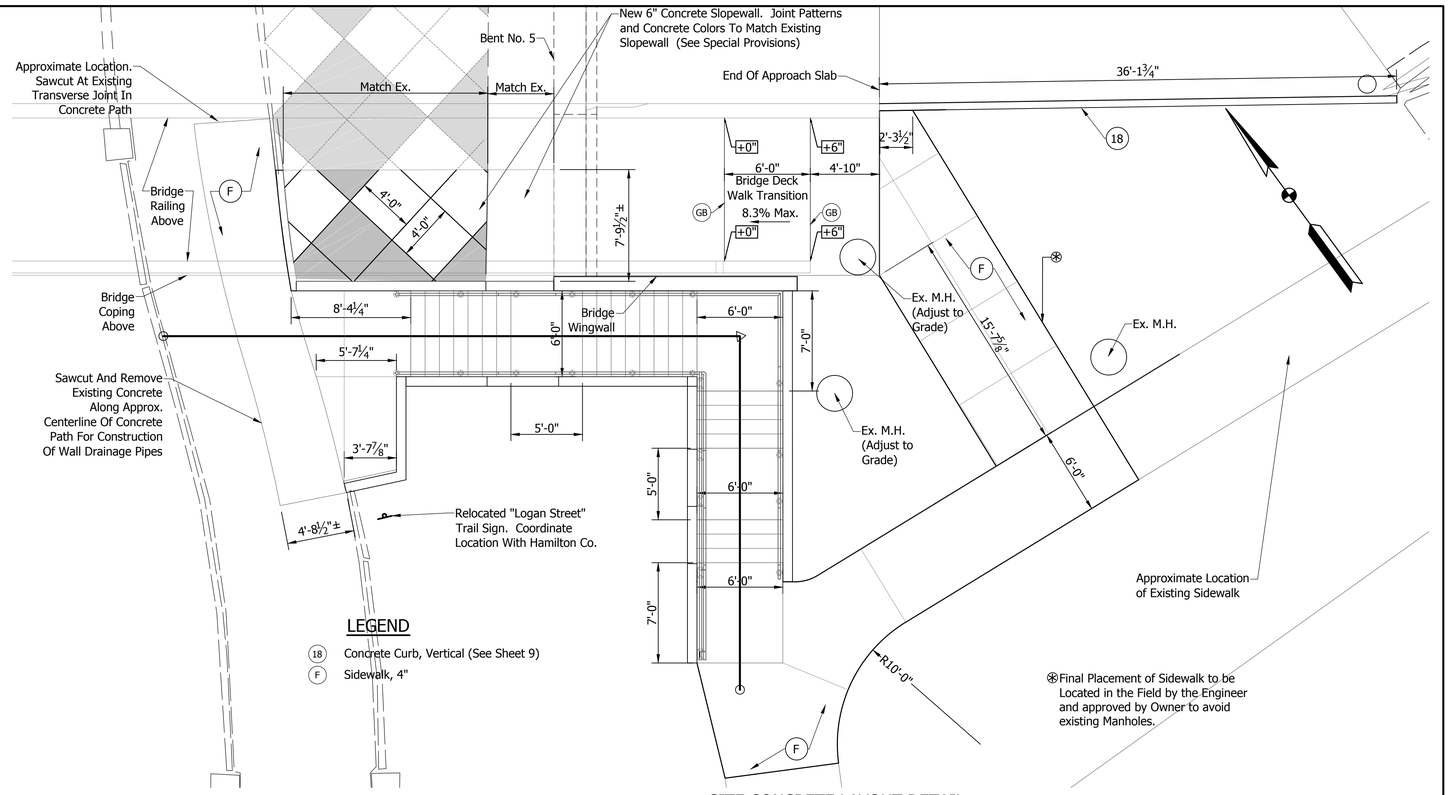

LEGEND

- 18 — Concrete Curb, Vertical (See Sheet 9)
- F — Sidewalk, 4"

SITE CONCRETE LAYOUT DETAIL

Scale: 1" = 5'

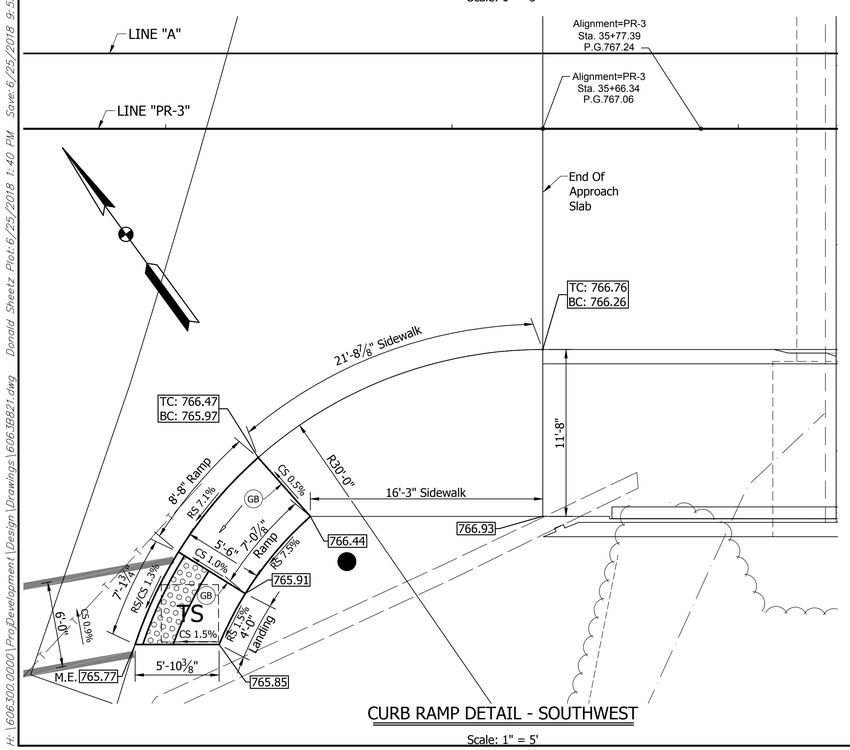

CURB RAMP DETAIL - SOUTHWEST

Scale: 1" = 5'

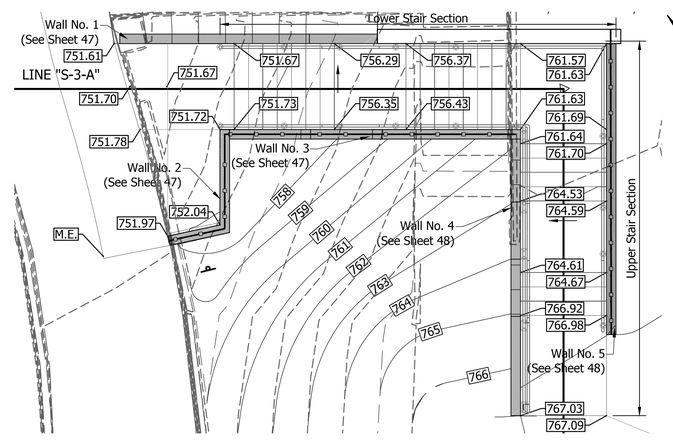

STAIR GRADING OVERVIEW

Scale: 1" = 5'

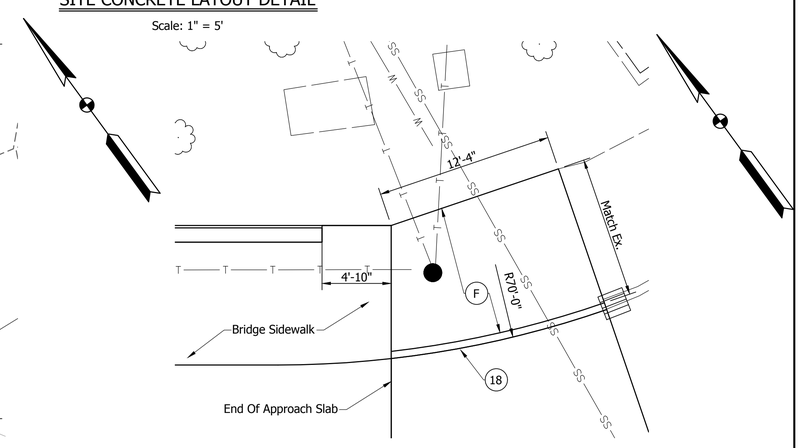

N.E. SIDEWALK TRANSITION DETAIL

Scale: 1" = 5'

SLOPEWALL, SIDEWALK, STAIR & RAMP LAYOUT

BRYAN WRIGHT — REGISTERED No. PE11100630 STATE OF INDIANA — PROFESSIONAL ENGINEER

RECOMMENDED FOR APPROVAL: DESIGN ENGINEER — DATE 4/24/2018

DESIGNED: B. WRIGHT — DRAWN: L. KIRSCH

CHECKED: M. EICHENAUER — CHECKED: B. WRIGHT

BRIDGE NO.207
OVER WHITE RIVER
HAMILTON COUNTY

Headquarters
8450 WESTFIELD BLVD., SUITE 300
INDIANAPOLIS, IN. 46240-8302
TEL 317-713-4615
FAX 317-713-4616
www.BFSEngr.com

Branch Locations
FORT WAYNE 260-459-1532
LOUISVILLE 502-593-1996
LAFAYETTE 765-423-5602
MERRILLVILLE 219-769-2333
PLAINFIELD 317-839-3242

BFS Butler Fairman & Seufert CIVIL ENGINEERS

HORIZONTAL SCALE	BRIDGE FILE
AS NOTED	HAMILTON 207
VERTICAL SCALE	DESIGNATION
N/A	
SURVEY BOOK	SHEET
ELECTRONIC	50 OF 59
CONTRACT	PROJECT
	PB-18-0001

BFS NO. 6063

H:\606300.0000\Pro_Development\Design\Drawings\606300821.dwg Donald Sheetz Plot:6/25/2018 1:40 PM Save:6/25/2018 9:55 AM

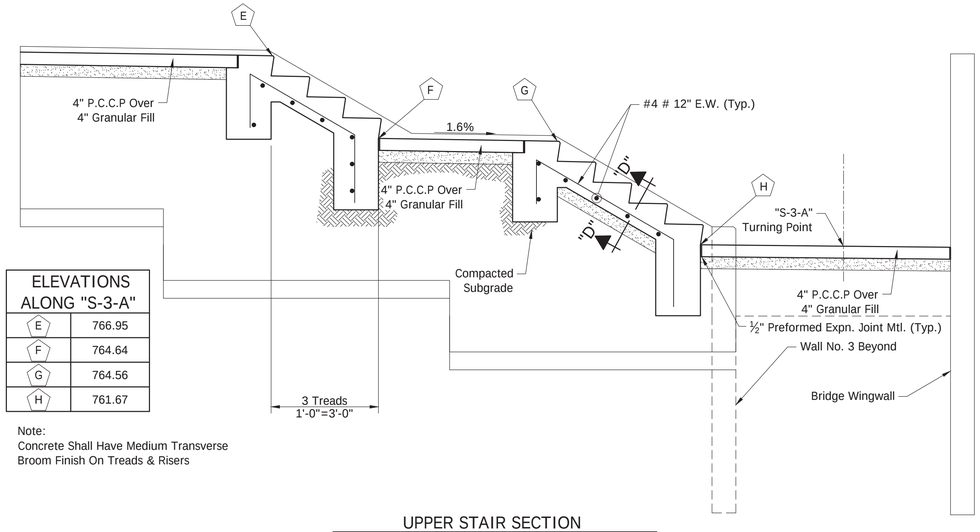

ELEVATIONS ALONG "S-3-A"	
E	766.95
F	764.64
G	764.56
H	761.67

Note:
Concrete Shall Have Medium Transverse
Broom Finish On Treads & Risers

UPPER STAIR SECTION

Scale: 1/2" = 1'-0"

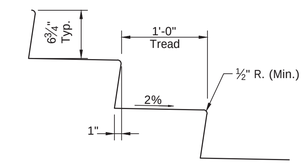

TYPICAL TREAD/RISER DETAIL

Scale: Not To Scale

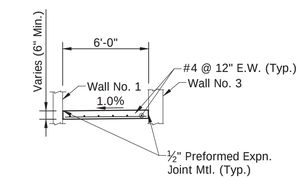

SECTION "C-C"

Scale: Not To Scale

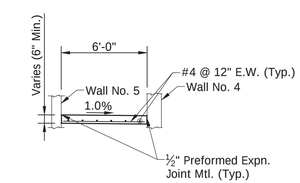

SECTION "D-D"

Scale: Not To Scale

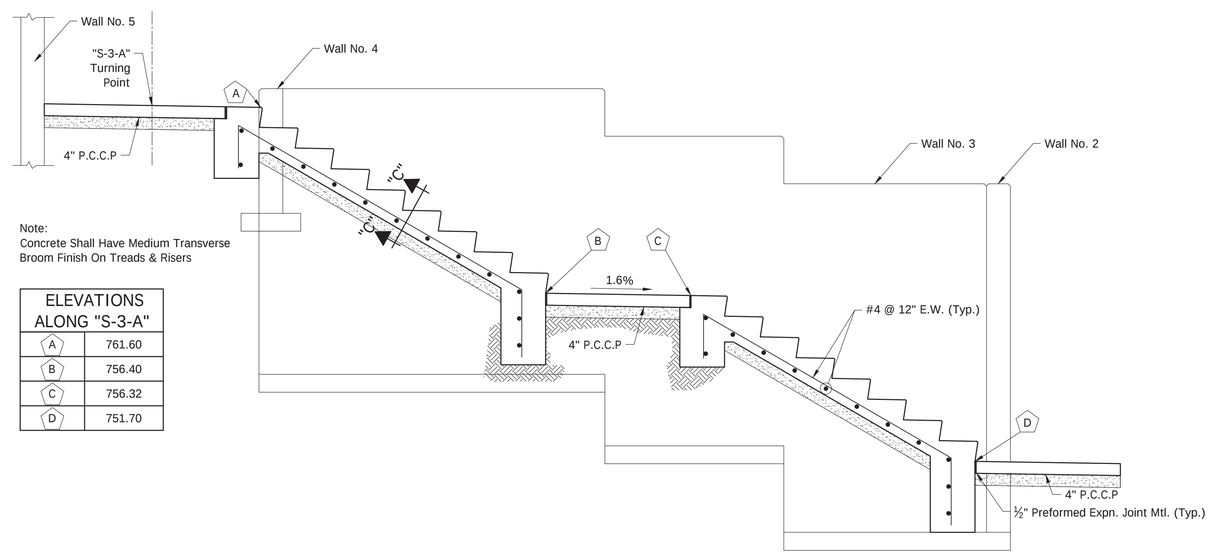

Note:
Concrete Shall Have Medium Transverse
Broom Finish On Treads & Risers

ELEVATIONS ALONG "S-3-A"	
A	761.60
B	756.40
C	756.32
D	751.70

LOWER STAIR SECTION

Scale: 1/2" = 1'-0"

STAIR DETAILS

BRYAN WRIGHT
REGISTERED
No. PE11100630
STATE OF INDIANA
PROFESSIONAL ENGINEER

RECOMMENDED FOR APPROVAL: 4/24/2018
DESIGN ENGINEER DATE

DESIGNED: B. WRIGHT DRAWN: L. KIRSCH
CHECKED: M. EICHENAUER CHECKED: B. WRIGHT

BRIDGE NO.207
OVER WHITE RIVER
HAMILTON COUNTY

Headquarters
8450 WESTFIELD BLVD., SUITE 300
INDIANAPOLIS, IN. 46240-8302
TEL 317-713-4615
FAX 317-713-4616
www.BFSEngr.com

BF&S Butler Fairman & Seufert
CIVIL ENGINEERS

Branch Locations
FORT WAYNE 260-459-1532
LOUISVILLE 502-493-1996
LAFAYETTE 765-423-5602
MERRILLVILLE 219-769-2333
PLAINFIELD 317-839-3242

HORIZONTAL SCALE	BRIDGE FILE
AS NOTED	HAMILTON 207
VERTICAL SCALE	DESIGNATION
N/A	
SURVEY BOOK	SHEET
ELECTRONIC	51 OF 59
CONTRACT	PROJECT
	PB-18-0001

BFS NO. 6063

H:\06-300.0000\ProjDevelopment\Design\Drawings\6063B221.dwg Donald Sheetz Plot:6/25/2018 1:53 PM Save:6/25/2018 9:55 AM

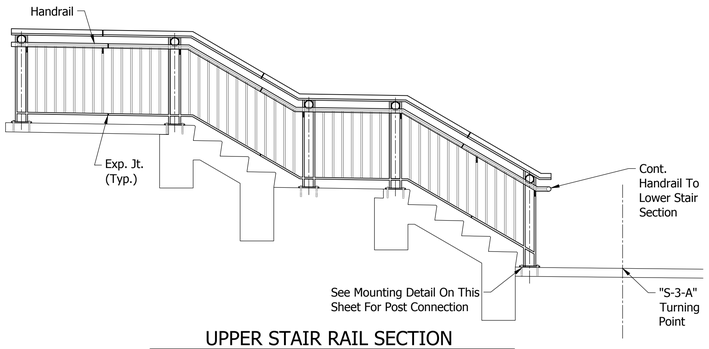

UPPER STAIR RAIL SECTION
LINE "S-3-A" RT.
Scale: 3/8" = 1'-0"

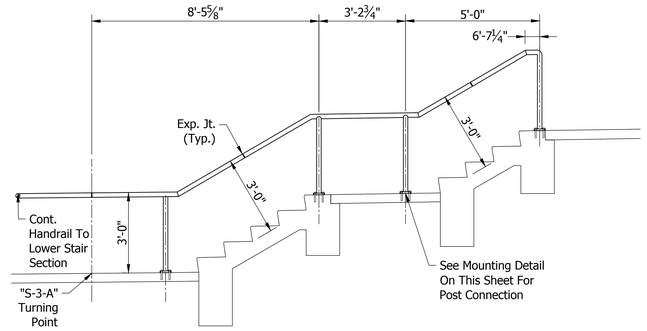

UPPER STAIR RAIL SECTION
LINE "S-3-A" LT.
Scale: 1" = 5'

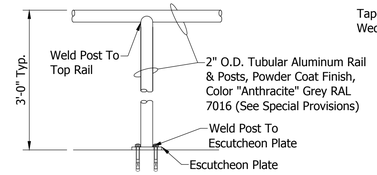

ELEVATION

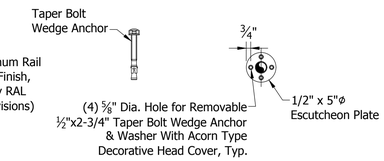

ESCUTCHEON PLATE

RAIL TYPE I DETAIL
Scale: Not To Scale

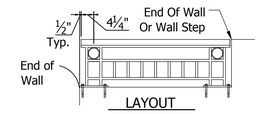

LAYOUT

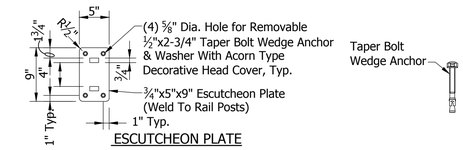

ESCUTCHEON PLATE

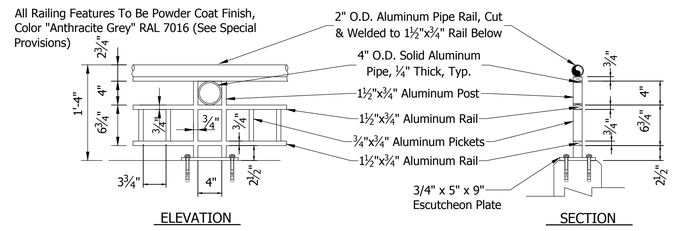

ELEVATION SECTION

RAIL TYPE II DETAIL
Scale: Not To Scale

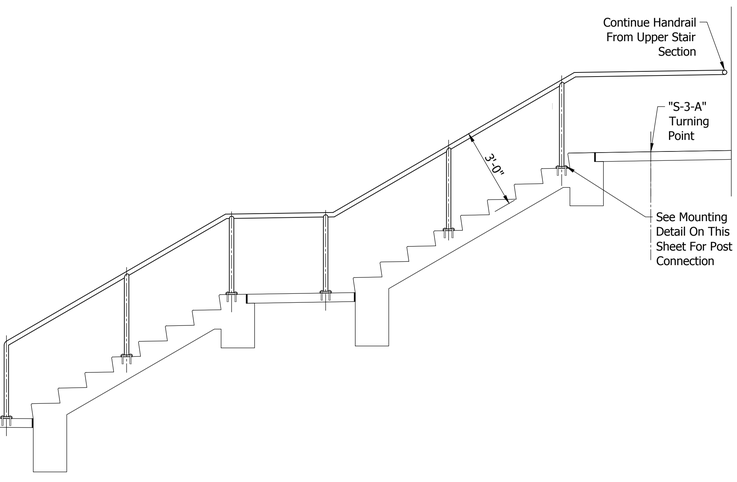

LOWER STAIR RAIL SECTION
LINE "S-3-A" LEFT
Scale: 3/8" = 1'-0"

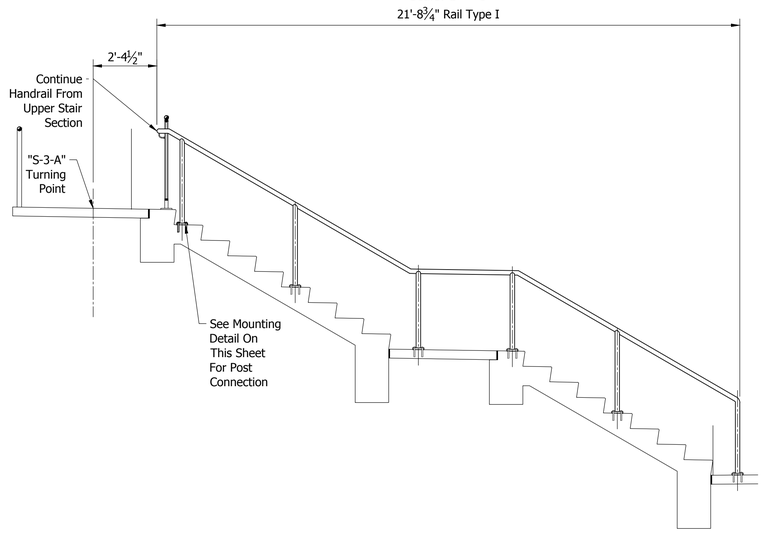

LOWER STAIR RAIL SECTION
LINE "S-3-A" RIGHT
Scale: 3/8" = 1'-0"

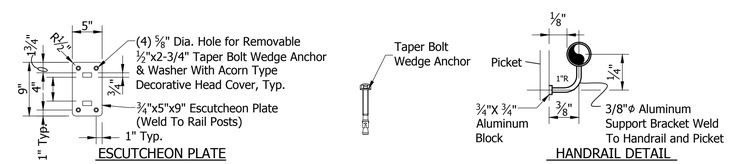

ESCUTCHEON PLATE HANDRAIL DETAIL

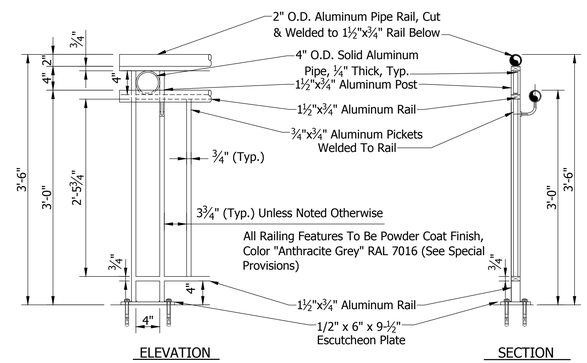

ELEVATION SECTION

RAIL TYPE III DETAIL
Scale: Not To Scale

RAILING DETAILS

BRYAN WRIGHT
REGISTERED
No. PE11100630
STATE OF INDIANA
PROFESSIONAL ENGINEER

RECOMMENDED FOR APPROVAL: _____ DESIGN ENGINEER 4/24/2018 DATE

DESIGNED: B. WRIGHT DRAWN: L. KIRSCH
CHECKED: M. EICHENAUER CHECKED: B. WRIGHT

BRIDGE NO.207
OVER WHITE RIVER
HAMILTON COUNTY

Headquarters
8450 WESTFIELD BLVD., SUITE 300
INDIANAPOLIS, IN. 46240-8302
TEL 317-713-4615
FAX 317-713-4616
www.BFSEngr.com

BF&S Butler Fairman & Seufert CIVIL ENGINEERS

Branch Locations
FORT WAYNE 260-459-1532
LOUISVILLE 502-593-1996
LAFAYETTE 765-423-5602
MERRILLVILLE 219-769-2333
PLAINFIELD 317-839-3242

HORIZONTAL SCALE	BRIDGE FILE
AS NOTED	HAMILTON 207
VERTICAL SCALE	DESIGNATION
N/A	

SURVEY BOOK	SHEET		
ELECTRONIC	52	OF	59
CONTRACT	PROJECT		
	PB-18-0001		

BFS NO. 6063

H:\606300.0000\ProDevelopment\Design\Drawings\606.38821.dwg Donald Sheetz Plot:6/25/2018 1:40 PM Save:6/25/2018 9:55 AM

STRUCTURE QUANTITIES

ITEM	CONCRETE CLASS C IN SUPERSTR.	CONCRETE CLASS A IN SUBSTR.	CONCRETE CLASS B IN FOOTING	DENSE GRADED SUBBASE	REINF. CONC. BRIDGE APPR. 12"	STRUCTURAL STEEL	RAILING CONC. PS-2	REINF. BARS (EPOXY COATED)	REINF. BARS (PLAIN)	14"ϕ STEEL ENCASED CONCRETE PILES	CONICAL PILE SHOE, 14 IN.	ORNAMENTAL RAILING (BY OTHERS)	DRAIN PIPE CASTING EXTENSION 6"	CAST IRON DRAIN TYPE "OS-D"	CAST IRON DRAIN TYPE "SQ-A"	BRIDGE DECK OVERLAY	THREADED TIE BAR ASSEMBLIES (EPOXY COATED)	FOUNDATION EXCAVATION UNCLASSIFIED	EST. AREA SURFACE SEAL	ADDITIONAL BRIDGE DECK OVERLAY	FIELD DRILLED HOLES IN CONCRETE	SURFACE MILLING	HYDRO-DEMOLITION	CONCRETE BRIDGE RAILING TRANSITION TPS-2 (MODIFIED)	AGGREGATE FOR END BENT BACKFILL	GEOTEXTILE FOR RIPRAP, TYPE 2A	BEARING ASSEMBLY ELASTOMERIC	TEST PILE DYNAMIC PRODUCTION	DYNAMIC PILE LOAD TEST	TEST PILE DYNAMIC RESTRIKE	2"ϕ GALVANIZED STEEL CONDUIT	SLOPEWALL CONCRETE, 6"	RAILING PS-2
	CYS.	CYS.	CYS.	CYS.	SYS.	LBS.	CYS.	LBS.	LBS.	LFT.	EACH	LFT.	EACH	EACH	EACH	SYS.	EACH	CYS.	SFT.	CYS.	EACH	SYS.	SYS.	EACH	CYS.	SYS.	EACH	LFT.	EACH	EACH	LFT.	SYS.	LFT.
PHASE I																																		
SUPERSTRUCTURE																																		
Spans "A", "B", "C" & "D"	211.2					206504	21.0	66437				356	6	4	2	562	66		9962	4.0	808	567	567								700		302.5
SUBSTRUCTURE																																		
Bent No.1		27.0	16.7					9784		240	4						14	93.8			90				26	45	2	90	1	1			
Pier No.2		125.6	43.6						8850	525	8								74		39							85	1	1			
Pier No.3		130.1	43.6						9918	525	8								74		39							85	1	1			
Pier No.4		125.6	43.6						8850	600	8								74		39												
Bent No.5		19.1						6268		180	2						14	66.1			56				14.8	21	2					26	
APPROACH SLABS																																		
West				11	65			3449									42		590					1									
East				11	65			3449									42		590					1									
BRIDGE RAIL TRANSITIONS																																		
West								775																										
East								775																										
SUB-TOTALS	211.2	427.4	147.5	22	130	206504	21.0	90937	27618	2070	30	356	6	4	2	562	178	159.9	11364	4.0	1071	567	567	2	40.8	66	4	260	3	3	700	26	302.5
PHASE II																																		
SUPERSTRUCTURE																																		
Spans "A", "B", "C" & "D"	131.1						28.6	22460					2	2		867	36		5004	6.0	1111	752	752								345		302.5
SUBSTRUCTURE																																		
Bent No.1		5.5						2762										16.7			42				12	39	3						
Bent No.5		5.5						2762										12.9			42				18.2	60	3						
APPROACH SLABS																																		
West	4.4			14	82			4775											730					1									
East	4.4			14	82			4775											730					1									
BRIDGE RAIL TRANSITIONS																																		
West								775																										
East								775																										
SUB-TOTALS	139.9	11.0		28	164		28.6	39084					2	2		867	36	29.6	6464	6.0	1195	752	752	2	30.2	99	6				345		302.5
PHASE III																																		
SUPERSTRUCTURE																																		
Spans "A", "B", "C" & "D"							16.8	3939											1207		908												
BRIDGE RAIL TRANSITIONS																																		
West								508											110		76			1									
East								508											110		76			1									
SUB-TOTALS							16.8	4955											1427		1060			2									
TOTALS	351.1	438.4	147.5	50	294	206504	66.4	⊕ 134976	⊕ 27618	2070	30	356	8	6	2	1429	214	189.5	19255	10.0	3326	1319	1319	6	71.0	165	10	260	3	3	1045	26	605

⊕ A.S.T.M. A615, Grade 60

BRIDGE SUMMARY

BRYAN WRIGHT
REGISTERED
No. PE11100630
STATE OF INDIANA
PROFESSIONAL ENGINEER

RECOMMENDED FOR APPROVAL: _____ DESIGN ENGINEER 4/24/2018 DATE

DESIGNED: B. WRIGHT DRAWN: D. SHEETZ

CHECKED: C. OBRIEN CHECKED: B. WRIGHT

BRIDGE NO.207
OVER WHITE RIVER
HAMILTON COUNTY

Headquarters
8450 WESTFIELD BLVD., SUITE 300
INDIANAPOLIS, IN. 46240-8302
TEL 317-713-4615
FAX 317-713-4616
www.BFSEngr.com

Butler Fairman & Seufert
CIVIL ENGINEERS

Branch Locations
FORT WAYNE 260-459-1532
LOUISVILLE 502-593-1996
LAFAYETTE 765-423-5602
MERRILLVILLE 219-769-2333
PLAINFIELD 317-839-3242

HORIZONTAL SCALE	BRIDGE FILE
AS NOTED	HAMILTON 207
VERTICAL SCALE	DESIGNATION
AS NOTED	6063
SURVEY BOOK	SHEET
ELECTRONIC	53 OF 59
CONTRACT	PROJECT
	PB-18-0001

BFS NO.

H:\606300.0000\ProDevelopment\Design\Drawings\606.39901.dwg Donald Sheetz Plot:6/25/2018 1:40 PM Save:6/20/2018 3:15 PM

SUMMARY OF QUANTITIES AND APPROACH TABLE

LOCATION (STATION)	DESCRIPTION (APPROACH TYPE OR CLASS)	WIDTH	LENGTH	RADII	SURFACE BEYOND R/W LINE			GRADE		EXCAVATION		APPROACHES/PATH					PAVEMENT						TEMPORARY PAVEMENT				SUBGRADE TREATMENT TYPE 1B	TYPE	SUBGRADE TREATMENT TYPE III	ASPHALT MATERIAL FOR		JOINT ADHESIVE SURFACE	INTERMEDIATE	LIQUID ASPHALT SEALANT	BASE SEAL	SURFACE MILLING, 1.5"	COMPACTED AGGREGATE FOR BASE NO. 53 (For Shoulder)		COMPACTED AGGREGATE FOR BASE NO. 53 (For Driveways)		D-1 CONTRACTION JOINTS	PCCP, 4 IN	REMARKS
												HMA					QC/QA-HMA						HMA										JOINT ADHESIVE											
					COMPACTED AGGREGATE BASE	HMA	CONCRETE					HMA TYPE "D" FOR APPROACH	HMA TYPE "D" SURFACE	HMA TYPE "D" INTERMEDIATE	PCCP FOR APPROACHES	PCCP FOR APPROACHES	2, 70, SURFACE 12.5mm	2, 70, INTERMEDIATE 19.0mm	3, 76, BASE 25.0mm	3, 76, BASE 25.0mm	5, 76, INTERMEDIATE C19.0mm	PCCP	HMA TYPE "B"	HMA TYPE "B"	HMA TYPE "A"	PCCP				PRIME COAT	TACK COAT											
												LBS. PER SYD.			DEPTH		LBS. PER SYD.					DEPTH	LBS. PER SYD.			DEPTH											DEPTH		DEPTH			
								1	2	CUT	FILL	110	165	220			220	275	275	330	220		440	440	330												6 IN.		6 IN.			
		FEET	FEET	FEET				%	%	CYS.	CYS.	TONS	TONS	TONS	SYS	SYS	TONS	TONS	TONS	TONS	TONS	SYS	TONS	TONS	TONS	SYS	SYS.	SYS.	SYS.	TONS	TONS	LFT	LFT	LFT	TONS	SYS	SYS.	SYS.	SYS.	SYS.	LFT	SYS	
													45																														Wedge/Level
																																										20	Riverwalk

PAVEMENT MARKINGS

FROM STATION	TO STATION	MULTI-COMPONENT SOLID WHITE, 4"	MULTI-COMPONENT SOLID YELLOW, 4"	MULTI-COMPONENT BROKEN WHITE, 4"	MULTI-COMPONENT BROKEN YELLOW, 4"	MULTI-COMPONENT SOLID WHITE, 6"	MULTI-COMPONENT SOLID YELLOW, 8"	MULTI-COMPONENT SOLID WHITE, 8"	MULTI-COMPONENT SKIP WHITE, 4" (3' Line, 5' Spa.)	MULTI-COMPONENT DOTTED WHITE, 12" (3' Line, 5' Spa.)	TRANSVERSE MARKINGS, YIELD TRIANGLE, WHITE	TRANSVERSE MARKINGS CROSSHATCH LINE, 12"	TRANSVERSE MARKINGS STOP BAR, 24"	TRANSVERSE MARKINGS CROSSWALK, 6"	PVMNT. MESSAGE MULTI-COMPONENT LANE INDICATION ARROW	PVMNT. MESSAGE MULTI-COMPONENT "ONLY"
		LFT	LFT	LFT	LFT	LFT	LFT	LFT	LFT	LFT	LFT	LFT	LFT	LFT	EACH	EACH
35+66.34	39+09.84	700	500	78									24		4	2

TEMPORARY EROSION CONTROL TABLE

FROM STATION	TO STATION	LOCATION			PERIMETER PROTECTION	DRAINAGE BARRIER AT SWALE	STRAW BALE DITCH CHECK	RIPRAP DITCH CHECK	CULVERT PIPE PROTECTION	SEDIMENT TRAP	DROP INLET PROTECTION	CURB INLET PROTECTION	REMARKS
		LEFT	MEDIAN	RIGHT	LFT	LFT	LFT	LFT	LFT	CYS	EA.	EA.	

BRYAN WRIGHT REGISTERED No. PE11100630 STATE OF INDIANA PROFESSIONAL ENGINEER

RECOMMENDED FOR APPROVAL: 4/24/2018
DESIGN ENGINEER DATE

DESIGNED: C. O'BRIEN DRAWN: L. KIRSCH
CHECKED: B. WRIGHT CHECKED: B. WRIGHT

BRIDGE NO.207
OVER WHITE RIVER
HAMILTON COUNTY

Headquarters
8450 WESTFIELD BLVD., SUITE 300
INDIANAPOLIS, IN. 46240-8302
TEL 317-713-4615
FAX 317-713-4616
www.BFSEngr.com

BF&S Butler Fairman & Seufert CIVIL ENGINEERING

Branch Locations
FORT WAYNE 260-459-1532
LOUISVILLE 502-593-1996
LAFAYETTE 765-423-5602
MERRILLVILLE 219-769-2333
PLAINFIELD 317-839-3242

HORIZONTAL SCALE	BRIDGE FILE
1" = 20'-0"	HAMILTON 207
VERTICAL SCALE	DESIGNATION
1" = 10'-0"	
SURVEY BOOK	SHEET
ELECTRONIC	54 OF 59
CONTRACT	PROJECT
	PB-18-0001

BFS NO. 6063

H:\606300.0000\ProjDevelopment\Design\Drawings\606300.dwg Donald Sheetz Plot:6/25/2018 1:40 PM Save:4/23/2018 3:18 PM

FOR INFORMATION ONLY

GENERAL NOTES

(APPLY TO ALL ELECTRICAL SHEETS)

1. COORDINATE INSTALLATION OF LIGHT FIXTURES WITH APPLICABLE DRAWINGS.
2. ELECTRICAL CONTRACTOR SHALL VERIFY THE EXISTING CONDITIONS AT THE PROJECT SITE BEFORE SUBMITTING COST PROPOSAL.
3. ELECTRICAL CONTRACTOR SHALL REFER TO ALL APPLICABLE DRAWINGS TO FAMILIARIZE HIMSELF WITH EXTENT OF REMODELING / ALTERATION WORK.
4. ALL WORK SHALL CONFORM TO OR EXCEED THE MINIMUM REQUIREMENTS OF THE CURRENT ANSI / NFPA 70 WITH STATE AMENDMENTS, ENERGY CODE, ANSI / IEEE C2 AND ALL FEDERAL, STATE, LOCAL AND MUNICIPAL CODES AND ORDINANCES. THE ELECTRICAL SUBCONTRACTOR SHALL COMPLY WITH THE DIRECTIONS OF ALL AUTHORITIES HAVING JURISDICTION.
5. INSTALL WORK USING PROCEDURES DEFINES IN NECA STANDARDS OF INSTALLATION. ALL WORK SHALL PRESENT A NEAT MECHANICAL APPEARANCE WHEN COMPLETED.
6. COORDINATE ALL ELECTRICAL WORK WITH ALL OTHER TRADES TO ENSURE EFFECTIVE AND EFFICIENT OVERALL INSTALLATION.
7. COORDINATE ALL ELECTRICAL SYSTEM DOWNTIME WITH THE OWNER AND OTHER TRADES. IT IS MANDATORY THAT THE EXISTING BRIDGE REMAIN IN CONTINUOUS AND NON-INTERRUPTED OPERATION DURING THE REMODELING / ALTERING OF THE EXISTING STRUCTURE. THE SPECIFIC AREA(S) BEING REMODELED / ALTERED AT ANY TIME ARE OBVIOUSLY EXCLUSIVE OF THE STATEMENT. SERVICES TO EXISTING BUILDING SHALL BE KEPT ON CONTINUOUS OPERATION INCLUDING POWER, FIRE ALARM, LIGHTING, TELEPHONE, ETC. DOWNTIME OF THESE SYSTEMS SHALL BE MINIMIZED. WEEKEND AND AFTER HOURS WORK MAY BE REQUIRED TO PREVENT OR MINIMIZE INTERFERENCE WITH OWNERS OPERATION.
8. CONTRACTOR SHALL WORK CLOSELY WITH THE OWNER TO IDENTIFY ALL SYSTEMS WIRING, DEVICES, ETC. THAT MUST REMAIN OPERATIONAL DURING CONSTRUCTION. COORDINATE ALL DEMOLITION WITH THE OWNER PRIOR TO ANY DEMOLITION WORK.
9. WHERE DEVICES ARE OMITTED FROM PRESENT BRANCH CIRCUITS, THE REMAINING DEVICE SHALL BE REWIRED. IF NEEDED AND AS REQUIRED, TO REMAIN IN THEIR RESPECTIVE CIRCUITS AND IN OPERATING CONDITION.
10. ALL NEW EQUIPMENT SHALL BE SUBMITTED FOR APPROVAL PRIOR TO ORDERING. COORDINATE ELECTRICAL WORK FOR THIS EQUIPMENT WITH THE OTHER TRADES.
11. ALL BRANCH CIRCUITS SHALL UTILIZE SEPARATE INDEPENDENT NEUTRAL CONDUCTORS. DO NOT COMBINE NEUTRAL CONDUCTORS.
12. ALL FEEDER NEUTRAL / GROUNDED CONDUCTORS SHALL BE CONSIDERED CURRENT CARRYING. DERATE MULTIPLE CONDUCTORS IN A RACEWAY ACCORDINGLY WITH NEC TABLES.
13. INSTALL ALL CONDUITS AND RACEWAYS, FOR MAXIMUM HEAD CLEARANCE.
14. ALL DEVICES SHOWN ON THESE DRAWINGS TO BE REMOVED SHALL BE REMOVED COMPLETE INCLUDING ALL ASSOCIATED CONDUIT AND WIRING BACK TO SOURCE UNLESS OTHERWISE NOTED. ALL CIRCUIT BREAKERS OR EQUIPMENT MADE SPARE BY THE DEMOLITION SHALL BE TURNED OFF AND MARKED SPARE. IT IS THE INTENT THAT ALL EXISTING ELECTRICAL DEVICES, CONDUIT, WIRING, ETC. IN THIS SPACE THAT ARE NOT REUSED AND ARE ABANDONED SHALL BE REMOVED COMPLETE. CONTRACTOR SHALL FIELD VERIFY EXACT REQUIREMENTS. NOT ALL DEVICES ARE SHOWN ON THIS DRAWING.
15. ALL DEVICES AND LIGHT FIXTURES SHOWN TO BE REMOVED FROM EXISTING BLOCK WALLS THAT ARE NOT REUSED SHALL HAVE BLANK COVERS INSTALLED.
16. ALL DEVICES SHOWN TO BE REMOVED FROM EXISTING WALLS THAT REMAIN SHALL HAVE DEVICES AND ASSOCIATED CONDUIT REMOVED AND WALL SHALL BE PATCHED.
17. WIRING THAT IS TO BE INSTALLED EXPOSED SHALL BE INSTALLED NEATLY AND AT RIGHT ANGLES TO STRUCTURE. WIRING SHALL BE INDEPENDENTLY SUPPORTED AS REQUIRED. WIRING SHALL NOT LAY OVER OTHER TRADES.
18. NEW DEVICES SHALL MATCH EXISTING DEVICES AND COVERPLATES.
19. ELECTRICAL CONTRACTOR SHALL BE RESPONSIBLE FOR HIS OWN DEMOLITION, REMOVAL, CAPPING, STORING, ABANDONING, DISCONNECTION, RELOCATING AND RECONNECTION OF EXISTING ELECTRICAL EQUIPMENT AND MATERIAL. ALL CUTTING, PATCHING, REPAIRING, REPLACEMENT AND REFINISHING, SHALL MATCH THE EXISTING CONSTRUCTION AS NEARLY AS POSSIBLE.
20. ALL WIRING (POWER, LIGHTING) NOT REUSED FOR REMODELING AREAS SHALL BE COMPLETELY REMOVED BACK TO ASSOCIATED PANELS.
21. THE OWNER SHALL HAVE THE FIRST CHOICE TO ACCEPT EXISTING DEVICES BEING REMOVED.
22. REMOVE ALL ABANDONED CONDUITS, BOXES AND WIRING WITHIN PROJECT AREA.
23. CONTRACTOR SHALL PROTECT EXISTING CABLES DURING ALL PHASES OF CONSTRUCTION.
24. ALL LIGHT FIXTURES THAT ARE TAKEN OUT OF SERVICE AND NOT REUSED SHALL zeBE RETURNED TO THE OWNER.

UTILITY CONTACT

DUKE ENERGY
YARTO M BLEAH
YARTO.BLEAH@DUKE-ENERGY.COM
317.385.8175
WORK ORDER #278-67208

VOLTAGE DROP

(APPLY TO ALL ELECTRICAL SHEETS)
1. VOLTAGE DROP IS NOT SHOWN ON THE DRAWINGS. THE ELECTRICAL CONTRACTOR SHALL BE RESPONSIBLE FOR ADJUSTING ALL FEEDER AND BRANCH CIRCUIT CONDUCTOR SIZES TO COMPLY THE NATIONAL ELECTRICAL CODE AND ALL STATE AND LOCAL CODES VOLTAGE DROP REQUIREMENTS.
2. THE ELECTRICAL CONTRACTOR SHALL UPSIZE FEEDER AND BRANCH CIRCUIT CONDUCTORS AS REQUIRED BASED ON ACTUAL INSTALLED CONDUCTOR LENGHTS.
3. VOLTAGE DROP ON FEEDERS SHALL NOT EXCEED 2 PERCENT.
4. VOLTAGE DROP ON BRANCH CIRCUITS SHALL NOT EXCEED 3 PERCENT.

LIGHTING

SYMBOL	DESCRIPTION
	NO SHADING INDICATES NORMAL POWER
	HALF SHADED INDICATES LIFE SAFETY POWER
	FULL SHADED INDICATES EMERGENCY POWER
	24" x 48" LIGHTING FIXTURE
	24" x 24" LIGHTING FIXTURE
	12" x 48" LIGHTING FIXTURE
	12" x 36" LIGHTING FIXTURE
	12" x 24" LIGHTING FIXTURE
	12" x 12" LIGHTING FIXTURE
	12" x 96" LIGHTING FIXTURE
	6" x 96" LIGHTING FIXTURE
	6" x 48" LIGHTING FIXTURE
	6" x 36" LIGHTING FIXTURE
	6" x 24" LIGHTING FIXTURE
	8" DOWNLIGHT
	6" DOWNLIGHT
	4" DOWNLIGHT
	WALL MOUNTED LIGHT
	CEILING EXIT LIGHT (DUAL FACED)
	CEILING EXIT LIGHT (SINGLE FACE)
	WALL EXIT LIGHT
	WALL EXIT WITH EMERGENCY LIGHTS
	WALL EXIT WITH INTERIOR AND EXTERIOR EMERGENCY LIGHTS
	EXIT LIGHT DIRECTIONAL ARROWS
	WALL EMERGENCY BATTERY LIGHT
	CEILING EMERGENCY BATTERY LIGHT
	EXTERIOR POLE LIGHT (ONE HEAD)
	EXTERIOR POLE LIGHT (TWO HEADS)
	EXTERIOR POLE LIGHT (THREE HEADS)
	EXTERIOR POLE LIGHT (FOUR HEADS)
	EXTERIOR POLE LIGHT (TOP MOUNT)
	EXTERIOR BOLLARD

ELECTRICAL SWITCHES

SYMBOL	DESCRIPTION
$	TOGGLE SWITCH - 20 AMP, 120/277VAC
$3	TOGGLE SWITCH - 3 WAY
$4	TOGGLE SWITCH - 4 WAY
$K	TOGGLE SWITCH - KEY OPERATED
$T	TOGGLE SWITCH - HORSE POWER RATED MANUAL MOTOR STARTER WITH THERMAL OVERLOAD PROTECTION
$P	TOGGLE SWITCH - PILOT LIGHT
D	DIMMER SWITCH - 20 AMP, 120/277VAC
D3	DIMMER SWITCH - 3 WAY
D4	DIMMER SWITCH - 4 WAY
OC1	WALL OCCUPANCY SENSOR - 1 BUTTON CONTROL
OC2	WALL OCCUPANCY SENSOR - 2 BUTTON CONTROL
OC3	WALL OCCUPANCY SENSOR - DUAL RELAY FOR EXHAUST FAN CONTROL
OC	CEILING OCCUPANCY SENSOR
VS1	WALL VACANCY SENSOR - 1 BUTTON CONTROL
VS2	WALL VACANCY SENSOR - 2 BUTTON CONTROL
LC	LOW VOLTAGE LIGHTING CONTROLLER
T	0 - 3 HOUR TIMER SWITCH - 20 AMP, 120/277VAC
PC	PHOTO CELL

ELECTRICAL EQUIPMENT

SYMBOL	DESCRIPTION
	PAD MOUNTED TRANSFORMER
	SUSPENDED TRANSFORMER
	DISTRIBUTION PANELBOARD
	BRANCH PANELBOARD - RECESSED MOUNT
	BRANCH PANELBOARD - SURFACE MOUNT
	DISCONNECT SWITCH - NON-FUSED
	DISCONNECT SWITCH - FUSED
	MOTOR CONTROLLER
	COMBINATION MOTOR CONTROLLER / DISCONNECT
	TELECOM TERMINAL BOARD
	GROUND BAR
	JUNCTION OR PULL BOX
	PUSHBUTTON OR PUSH PLATE
T	ELECTRIC THERMOSTAT
X	MOTOR ("X" DENOTES HORSEPOWER)
	MOLDED CASE CIRCUIT BREAKER
	GROUND CONNECTION
	GROUND POINT
	GROUND ROD
	GENERATOR
	AUTOMATIC TRANSFER SWITCH

ELECTRICAL RECEPTACLES

SYMBOL	DESCRIPTION
	DUPLEX RECEPTACLE - NORMAL POWER CIRCUIT
	DUPLEX RECEPTACLE - EMERGENCY POWER CIRCUIT
	DUPLEX GFCI RECEPTACLE - NORMAL POWER CIRCUIT
	DUPLEX GFCI RECEPTACLE - EMERGENCY POWER CIRCUIT
	QUADRAPLEX RECEPTACLE - NORMAL POWER CIRCUIT
	QUADRAPLEX RECEPTACLE - EMERGENCY POWER CIRCUIT
	QUADRAPLEX GFCI RECEPTACLE - NORMAL POWER CIRCUIT
	QUADRAPLEX GFCI RECEPTACLE - EMERGENCY POWER CIRCUIT
	SIMPLEX RECEPTACLE - NORMAL POWER CIRCUIT
	SIMPLEX RECEPTACLE - EMERGENCY POWER CIRCUIT
	SPECIAL RECEPTACLE - NORMAL POWER CIRCUIT
	SPECIAL RECEPTACLE - EMERGENCY POWER CIRCUIT
	DUPLEX RECEPTACLE - TOP SWITCHED

RECEPTACLE LEGEND

	RECEPTACLE ABOVE COUNTERTOP AT +2" ABOVE BACKSPLASH TO BOTTOM OF DEVICE. COORDINATE WITH CASEWORK TO BE INSTALLED.
	RECEPTACLE INSTALLED BELOW COUNTERTOP AT +18" A.F.F. COORDINATE WITH CASEWORK TO BE INSTALLED.
X	"X" DENOTES AS FOLLOWS: NONE - 20 AMP, 125VAC HM - 20 AMP, 125VAC, HORIZONTAL MOUNT TYPE IG - 20 AMP, 125VAC, ISOLATED GROUND TYPE S - 20 AMP, 125VAC, SURGE GUARD PROTECTION TYPE ST - 20 AMP, 125VAC, SAFETY TYPE WP - 20 AMP, 125VAC, WEATHERPROOF TYPE
	CEILING DUPLEX RECEPTACLE - NORMAL POWER CIRCUIT
	CEILING DUPLEX RECEPTACLE - EMERGENCY POWER CIRCUIT
	CEILING QUADRAPLEX RECEPTACLE - NORMAL POWER CIRCUIT
	CEILING QUADRAPLEX RECEPTACLE - EMERGENCY POWER CIRCUIT
	FLOOR BOX DUPLEX RECEPTACLE - NORMAL POWER CIRCUIT
	FLOOR BOX DUPLEX RECEPTACLE - EMERGENCY POWER CIRCUIT
	FLOOR BOX QUADRAPLEX RECEPTACLE - NORMAL POWER CIRCUIT
	FLOOR BOX QUADRAPLEX RECEPTACLE - EMERGENCY POWER CIRCUIT
	FLOOR BOX BLANK
	FLOOR BOX POWER AND TELECOM
	MULTI-OUTLET ASSEMBLY (POWER AND/OR TELECOM)

INFORMATION SYSTEMS

SYMBOL	DESCRIPTION
X	VOICE AND DATA ONLY OUTLET "X" DENOTES AS FOLLOWS: # - QUANTITY OF JACK(S) AND CABLE(S) R - ROUGH-IN ONLY
X	CEILING - VOICE AND DATA
WAP	WAP - WIRELESS ACCESS POINT
X	FLOOR BOX - VOICE AND DATA
	TELECOMMUNICATIONS EQUIPMENT RACK
TV	TV SYSTEM OUTLET
AV	AUDIO/VISUAL CONTROLLER
C	CLOCK SYSTEM OUTLET
M	MICROPHONE INPUT RECEPTACLE - WALL MOUNTED
M	MICROPHONE INPUT RECEPTACLE - CEILING MOUNTED
S	SPEAKER - CEILING MOUNTED
S	SPEAKER - WALL MOUNTED
V	VOLUME CONTROL

DOOR SECURITY SYSTEM

SYMBOL	DESCRIPTION
CCTV	CCTV COAXIAL CABLE OUTLET AND POWER OUTLET
MTV	CCTV MONITOR OUTLET
	DOOR BUZZER
DR	ELECTRIC DOOR OPENER
ES	ELECTRIC DOOR STRIKE
IC	INTERCOM UNIT FLUSH MTD.
MI	MASTER INTERCOM AND DIRECTORY UNIT
DS	SECURITY DUTY STATION
SS	SECURITY STAFF STATION
ML	SECURITY DOOR ALARM MAGNETIC LOCK
CR	SECURITY CARD READER
MD	MOTION DETECTOR
DC	SECURITY DOOR CONTACTS
PB	SECURITY EXIT PUSH BUTTON
SM	SECURITY MONITOR
DE	SECURITY DOOR EGRESS
K	SECURITY KEYPAD
BS	BIOSCAN ACCESS PAD
	CAMERA
SCP	SECURITY CONTROL PANEL

FIRE ALARM SYSTEM

SYMBOL	DESCRIPTION
M	MANUAL SENDING STATION
SD	WALL SMOKE DETECTOR
SD	WALL SMOKE DETECTOR WITH SOUNDER BASE
SD	CEILING SMOKE DETECTOR
SD	CEILING SMOKE DETECTOR WITH SOUNDER BASE
DD X	AUTOMATIC DUCT DETECTOR ("X" DENOTES AS FOLLOWS) NONE - PHOTOELECTRIC TYPE S - SUPPLY R - RETURN
RT	REMOTE DETECTOR TEST STATION
RI	REMOTE DETECTOR INDICATOR STATION
HD	HEAT DETECTOR
FD	FLAME DETECTOR
BD	BEAM DETECTOR
H	WALL HORN ONLY
H	WALL HORN STROBE
H	CEILING HORN ONLY
H	CEILING HORN STROBE
S	WALL SPEAKER ONLY
S	WALL SPEAKER STROBE
S	CEILING SPEAKER STROBE
V	WALL VISUAL ONLY
V	CEILING VISUAL ONLY
AR	FIRE ALARM ADDRESSABLE RELAY
J	FIREMANS JACK
DU	DOOR UNLOCK
DR	DOOR RELEASE
FS	SPRINKLER SYSTEM FLOW SWITCH
TS	SPRINKLER SYSTEM TAMPER SWITCH
PIV	POST INDICATOR VALVE
FACP	FIRE ALARM CONTROL PANEL
FAAP	FIRE ALARM ANNUNCIATOR PANEL
NAC	FIRE ALARM NOTIFICATION APPLIANCE CONTROL PANEL

NURSE CALL SYSTEM

SYMBOL	DESCRIPTION
M	MASTER STATION
D	DUTY STATION
S	STAFF STATION
E	EMERGENCY/BATH STATION
PC	PULL CORD
PC A	PULL CORD WITH ALARM
P	PATIENT STATION - SINGLE OUTLET
P E	PATIENT STATION - SINGLE OUTLET WITH CODE / STAFF ASSIST BUTTON
CB	CODE BLUE STATION
CP	CODE PINK STATION
L	STAFF LOCATOR STATION
WL	WALL MOUNTED DOME LIGHT
CL	CEILING MOUNTED DOME LIGHT
Z	ZONE LIGHT
W	NURSE STATION INPUT JACK
R	ROOM READY INDICATOR
A	REMOTE ANNUNCIATOR
N	NURSE ASSIST
NC	NURSE ASSIST/CODE BLUE
X	NURSE AUXILIARY JACK
2X	DOUBLE NURSE AUXILIARY JACK
IC	BED CONTROL CABLE/INTERCONNECT JACK
	TELEMETRY ANTENNA LOCATION
IR	TRACKING SENSOR (IR)
RF	TRACKING SENSOR (RF)

ELECTRICAL ABBREVIATIONS

ABBREVIATION	DESCRIPTION	ABBREVIATION	DESCRIPTION
A or AMP	AMPERE	HZ	HERTZ
AC	ALTERNATING CURRENT	IC	INTERCOMMUNICATION
A/C	AIR CONDITIONING	ID	INSIDE DIAMETER
ACP	ACCESS PANEL	INCAN	INCANDESCENT
ACU	AIR CONDITIONING UNIT	INCL	INCLUDE
ADD	ADDITION	ISG	ISOLATED GROUND SURGE GUARD
ADJ	ADJUSTABLE	JB	JUNCTION BOX
AF	AMPERE FRAME	JT	JOINT
AFC	ABOVE FINISHED CEILING	KEC	KITCHEN EQUIPMENT CONTRACTOR
AFF	ABOVE FINISHED FLOOR	KT	KITCHENETTE
AFG	ABOVE FINISHED GRADE	KVA	KILOVOLT AMPERE
AHU	AIR HANDLING UNIT	KVAR	KILOVOLT AMPERE REACTIVE
AIC	AMPERE INTERRUPTING CAPACITY	KW	KILOWATT
AL	ALUMINUM	LAB	LABORATORY
AM	AMMETER	LB	POUND
AMB	AMBIENT	LF	LINEAR FEET
APPROX.	APPROXIMATELY	LOC	LOCATION
ARCH	ARCHITECT	LS	LIFE SAFETY
ATS	AUTOMATIC TRANSFER SWITCH	LT	LIGHT
AUTO	AUTOMATIC	LTG	LIGHTING
AVG	AVERGE	LV	LOW VOLTAGE
BC	BARE COPPER	MATV	MASTER ANTENNA TELEVISION
BKR	BREAKER	MAX	MAXIMUM
BHP	BRAKE HORSEPOWER	MC	MECHANICAL CONTRACTOR
BL	BUILDING LINE	MCB	MAIN CIRCUIT BREAKER
BLDG	BUILDING	MCC	MOTOR CONTROL CENTER
BR	BRANCH	MDP	MAIN DISTRIBUTION PANEL
BTM	BOTTOM	MECH	MECHANICAL
C	CONDUIT	MH	MANHOLE
°C	DEGREES CELSIUS	MIN	MINIMUM
CAB	CABINET	MISC	MISCELLANEOUS
CB or C/B	CIRCUIT BREAKER	MLO	MAIN LUGS ONLY
C/C	CENTER TO CENTER	MTD	MOUNTED
CCTV	CLOSED CIRCUIT TELEVISION	MTG HT	MOUNTING HEIGHT
CKT	CIRCUIT	MU	MEDICINE UNIT
CL	CENTER LINE	OD	OUTSIDE DIAMETER
CLG	CEILING	OFCI	OWNER FURNISHED-CONTRACTOR INSTALLED
COL	COLUMN	OFOI	OWNER FURNISHED-OWNER INSTALLED
COMM	COMMUNICATION	OPNG	OPENING
COMP	COMPRESSOR	OPP	OPPOSITE
CONC	CONCRETE	OR	OPERATING ROOM
CONST	CONSTRUCTION	P	POLE
CONT	CONTINUOUS	PB	PUSHBUTTON
CONTR	CONTRACTOR	PBOX	PULL BOX
CR	CRITICAL	PE	PNEUMATIC ELECTRIC CONVERTER
CT	CURRENT TRANSFORMER	PF	POWER FACTOR
CU	COPPER	PH or Ø	PHASE
DB	DIRECT BURIAL	PIV	POST INDICATOR VALVE
DC	DIRECT CURRENT	PNL	PANELBOARD
DEPT	DEPARTMENT	PL	PILOT LIGHT
DF	DRINKING FOUNTAIN	PREFAB	PREFABRICATED
DIST	DISTRIBUTION	PRES	PRESSURE
DM	DEMAND METER	PT	PNEUMATIC TUBE
DO	DRAWOUT	PTS	PNEUMATIC TUBE STATION
DRS	DOCTORS	PW	PART WINDING
DWG	DRAWING	PWR	POWER
EC	ELECTRICAL CONTRACTOR	RACU	ROOM AIR CONDITIONING UNIT
EF	EXHAUST FAN	RAD	RADIATION
ELEC	ELECTRIC	RECEPT	RECEPTACLE
ELEV	ELEVATOR	REF or REFR	REFRIGERATOR
ELV	ELEVATION	REINF	REINFORCED
EMER	EMERGENCY	RGIP	REMOTE GROUND INDICATING PANEL
ENCL	ENCLOSURE	RM	ROOM
EP	ELECTRIC PNEUMATIC	RPM	REVOLUTIONS PER MINUTE
EQUIP	EQUIPMENT	SA	SUPPLY AIR
EWC	ELECTRIC WATER COOLER	SC	SHORT CIRCUIT
EX	EXPLOSIONPROOF	SG	SURGE GUARD PROTECTION
EXH	EXHAUST	SHT	SHEET
EXP	EXPANSION	SIG	SIGNAL
EXT	EXTERIOR	SN	SOLID NEUTRAL
°F	DEGREES FAHRENHEIT	SPEC	SPECIFICATIONS
FA	FIRE ALARM	SQ	SQUARE
FAAP	FIRE ALARM ANNUNCIATOR PANEL	SS	SAFETY SWITCH
FACP	FIRE ALARM CONTROL PANEL	SSSS	SOLID STATE SOFT START
FC	FLAT CABLE	STD	STANDARD
FCU	FAN COIL UNIT	STN	STATION
FFC	FOOD FACILITY CONTRACTOR	STR	STRUCTURAL
FFS	FOOD FACILITY SUPPLIER	SUSP	SUSPENDED
FHC	FIRE HOSE CABINET	SW	SWITCH
FIN	FINISH	SWBD	SWITCHBOARD
FIXT	FIXTURE	SWGR	SWITCHGEAR
FL	FLOOR	TCC	TEMPERATURE CONTROL CONTRACTOR
FLUOR	FLUORESCENT	TELE	TELECOMMUNICATION
FLEX-CONN	FLEXIBLE CONNECTION	TEMP	TEMPERATURE
FPC	FIRE PROTECTION CONTRACTOR	TMH	TOP OF MANHOLE
FSS	FUSED SAFETY SWITCH	TV	TELEVISION
FTG	FOOTING	TYP	TYPICAL
FVR	FILMVIEWER	UC	UNDER CARPET
FV	FULL VOLTAGE	U/C	UNDER CABINET or UNDER COUNTER
FVNR	FULL VOLTAGE NON REVERSING	UH	UNIT HEATER
G or GND	GROUND	UV	UNIT VENTILATOR
GALV	GALVANIZED	V	VOLT
GC	GENERAL CONTRACTOR	VAC	VACUUM
GEN	GENERATOR	VB	VACUUM BREAKER
GFCI	GROUND FAULT CKT. INTERRUPTER	VC	VACUUM CLEANING
GFI	GROUND FAULT INTERRUPTER	VEL	VELOCITY
GFP	GROUND FAULT PROTECTION	VFD	VARIABLE FREQUENCY DRIVE
HGT	HEIGHT	VM	VOLTMETER
HH	HANDHOLE	VOL	VOLUME
HID	HIGH INTENSITY DISCHARGE	VP	VAPORPROOF
HO	HAND OPERATED	VSD/VFC	VARIABLE SPEED DRIVE/CONTROLLER
HOA	HAND-OFF-AUTOMATIC	W/	WITH
HORZ	HORIZONTAL	W/O	WITHOUT
HP	HORSEPOWER	WTR	WATER
HPS	HIGH PRESSURE SODIUM	WP	WEATHERPROOF
HTR	HEATER	WT	WEIGHT
HV	HIGH VOLTAGE	XFMR	TRANSFORMER
		Z	IMPEDANCE

RACEWAY SYSTEM

SYMBOL	DESCRIPTION
	FEEDER SIZE. (REFER TO FEEDER SCHEDULE FOR ADDITIONAL INFORMATION
	PHASE CONDUCTORS
	NEUTRAL
	GROUND

FXX

LINE SYMBOLS

	LIGHT/SCREENED SOLID OR DASHED LINES INDICATE EXISTING TO REMAIN
	HEAVY DASHED LINES INDICATE EXISTING TO BE REMOVED
	HEAVY CONTINUOUS LINES INDICATE NEW WORK

ALL SYMBOLS AND ABBREVIATIONS

ONS MAY NOT BE USED ON THIS PROJECT

GENESIS engineering group
91 South Main Street
Suite 200
Zionsville, IN 46077
Phone: 1.317.927.8307
www.genesis-engineering.com

DAVID SHUCK REGISTERED No. 19700101 STATE OF INDIANA PROFESSIONAL ENGINEER

Certified By:

Revisions

Number	Date	Description

Drawn By: JAW
Checked By: JAW
Project Status: DESIGN DEVELOPMENT
Date: 17 JAN 2018

Title: ELECTRICAL SYMBOLS AND NOTES

Project: BRIDGE NO. 207 - LOGAN STREET OVER WHITE RIVER

HAMILTON COUNTY

This drawing and its contents are then property of Genesis Engineering Group, and shall not be reproduced in whole or in part by any means, mechanical or electronic, without express written permission of Genesis Engineering Group. Copyright 2013, by Genesis Engineering Group, inc.

Drawing Number:

E001

C:\Users\jwalke\Documents\ESL - Logan Street Bridge_jwalke@genesis-engineering.com.rvt
4/18/2018 2:27:49 PM

FOR INFORMATION ONLY

PLAN NOTES

1 DISCONNECT AND REMOVE EXISTING LIGHT POLE COMPLETE BACK TO SOURCE OR NEAREST HANDHOLE / JUNCTION BOX TO REMAIN.

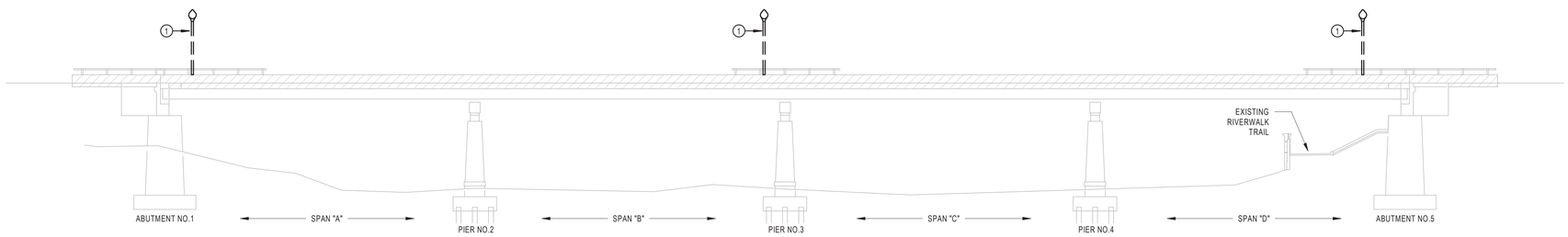

ELEVATION

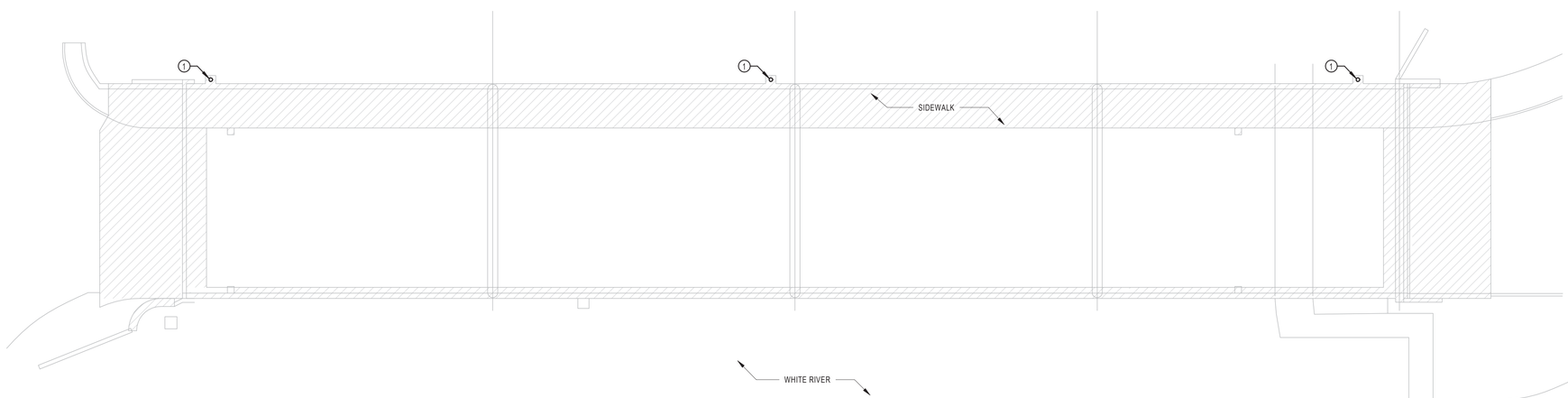

PLAN

1 Bridge Lighting Demolition Plan
1/16" = 1'-0"

GENESIS engineering group
91 South Main Street
Suite 200
Zionsville, IN 46077
Phone: 1.317.927.8307
www.genesis-engineering.com

Certified By:

DAVID SHUCK REGISTERED No. 19700101 STATE OF INDIANA PROFESSIONAL ENGINEER

Revisions

Number	Date	Description

Drawn By: JAW

Checked By: JAW

Project Status: DESIGN DEVELOPMENT

Date: 17 JAN 2018

Title: BRIDGE LIGHTING DEMOLITION PLAN

Project: **BRIDGE NO. 207 - LOGAN STREET OVER WHITE RIVER**

HAMILTON COUNTY

This drawing and its contents are then property of Genesis Engineering Group, and shall not be reproduced in whole or in part by any means, mechanical or electronic, without express written permission of Genesis Engineering Group. Copyright 2013, by Genesis Engineering Group, inc.

Drawing Number:

E100

C:\Users\jwalke\Documents\ESL - Logan Street Bridge_jwalke@genesis-engineering.com.rvt
4/18/2018 2:27:43 PM

VOLTAGE DROP

(APPLY TO ALL ELECTRICAL SHEETS)
1. VOLTAGE DROP IS NOT SHOWN ON THE DRAWINGS. THE ELECTRICAL CONTRACTOR SHALL BE RESPONSIBLE FOR ADJUSTING ALL FEEDER AND BRANCH CIRCUIT CONDUCTOR SIZES TO COMPLY THE NATIONAL ELECTRICAL CODE AND ALL STATE AND LOCAL CODES VOLTAGE DROP REQUIREMENTS.
2. THE ELECTRICAL CONTRACTOR SHALL UPSIZE FEEDER AND BRANCH CIRCUIT CONDUCTORS AS REQUIRED BASED ON ACTUAL INSTALLED CONDUCTOR LENGHTS.
3. VOLTAGE DROP ON FEEDERS SHALL NOT EXCEED 2 PERCENT.
4. VOLTAGE DROP ON BRANCH CIRCUITS SHALL NOT EXCEED 3 PERCENT.

PLAN NOTES

1. PROVIDE A DUKE ENERGY APPROVED NEMA 3R, 120 / 240V, 1P-3W, 200A METER BASE WITH INTEGRAL 12 POLE PANEL IN RIGHT-OF-WAY. ELECTRICAL CONTRACTOR TO PROVIDE CONDUIT FROM POLE TO METER BASE AND CONDUIT AND CONDUCTORS FROM METER BASE TO FIXTURES. ELECTRICAL CONTRACTOR SHALL COORDINATE LOCATION AND ALL ASPECTS OF METER INSTALLATION WITH UTILITY. UTILITY'S REQUIREMENTS SHALL TAKE PRECEDENCE. PROVIDE SUPPORT STRUCTURE WITH CONCRETE BASES AS REQUIRED.
2. CONNECT NEW LIGHTED HANDRAIL COMPLETE TO 120V, 20A, 1P CIRCUIT FROM NEW PANEL. PROVIDE CONDUIT / WIRING / HANDHOLES / JUNCTION BOXES AS REQUIRED. PROVIDE DMX CABLING TO IN SEPARATE CONDUIT. MOUNT ALL ASSOCIATED CONTROLLERS / DRIVERS / POWER SUPPLIES INSIDE BENCH ENCLOSURES. ENSURE ENCLOSURES AND WIRING / CONDUIT ARE HIDDEN FROM PUBLIC VIEW.
3. CONNECT NEW LIGHT POLE COMPLETE TO 120V, 20A, 1P CIRCUIT FROM NEW PANEL. PROVIDE CONDUIT / WIRING / HANDHOLES / JUNCTION BOXES AS REQUIRED. PROVIDE DMX CABLING TO IN SEPARATE CONDUIT. PROVIDE POLE BASE AS REQUIRED. REFER TO POLE BASE DETAIL ON SHEET E400 FOR ADDITIONAL INFORMATION.
4. CONNECT NEW LIGHT POLE COMPLETE TO 120V, 20A, 1P CIRCUIT FROM NEW PANEL. PROVIDE CONDUIT / WIRING / HANDHOLES / JUNCTION BOXES AS REQUIRED. PROVIDE DMX CABLING TO IN SEPARATE CONDUIT. GROUND FIXTURE AND POLE SIMILAR TO EXISTING FIXTURES. MOUNT POLE TO BRIDGE PROJECTION PROVIDED BY OTHERS.
5. RAILING UPRIGHT ENCLOSURE TO HOUSE SOUTH OVERLOOK HANDRAIL DRIVERS / POWER SUPPLIES. PROVIDE CONDUIT, CONDUCTORS AND CONTROL WIRING AS REQUIRED.
6. RAILING UPRIGHT ENCLOSURE TO HOUSE NORTH STREET SIDE HANDRAIL DRIVERS / POWER SUPPLIES. PROVIDE CONDUIT, CONDUCTORS AND CONTROL WIRING AS REQUIRED.
7. PROVIDE LIGHTING CONTACTOR, PER ESL SPECTRUM, IN A NEMA 3R ENCLOSURE. MOUNT ON METER / PANEL SUPPORT STRUCTURE AS REQUIRED.
8. ELECTRICAL CONTRACTOR SHALL FAMILIRIZE THEMSELVES WITH ALL FIXTURES, EQUIPMENT, DEVICES, MOUNTING, CONTROL, ETC AND PROVIDE A COMPLETE SYSTEM. CONTRACTOR SHALL COORDINATE ALL ASPECTS OF INSTALLATION WITH ESL SPECTRUM PRIOR TO BID.
9. CONNECT BRIDGE FLOOD LIGHTS TO CIRCUIT INDICATED ON PLAN. REFER TO SHEET E300 FOR ADDITIONAL INFORMATION.
10. CONNECT BRIDGE HANDRAIL LIGHTS TO CIRCUIT INDICATED ON PLAN. REFER TO SHEET E300 AND E400 FOR ADDITIONAL INFORMATION.
11. CONNECT BRIDGE POST TOP LIGHTS TO CIRCUIT INDICATED ON PLAN. REFER TO SHEET E300 AND E400 FOR ADDITIONAL INFORMATION.

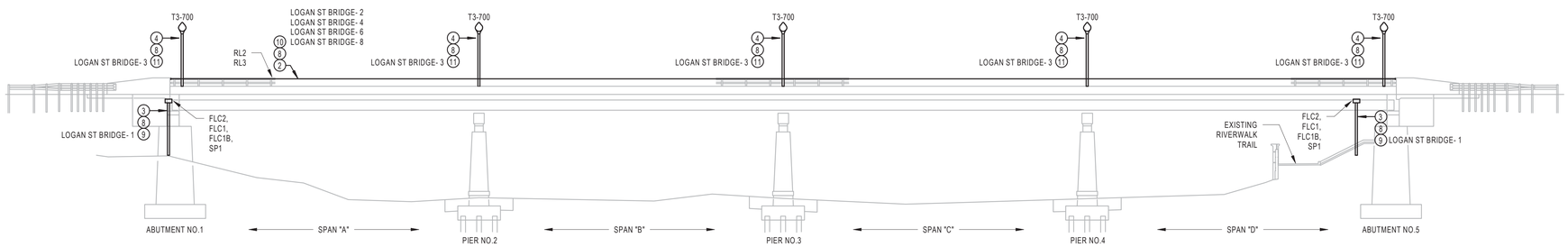

ELEVATION

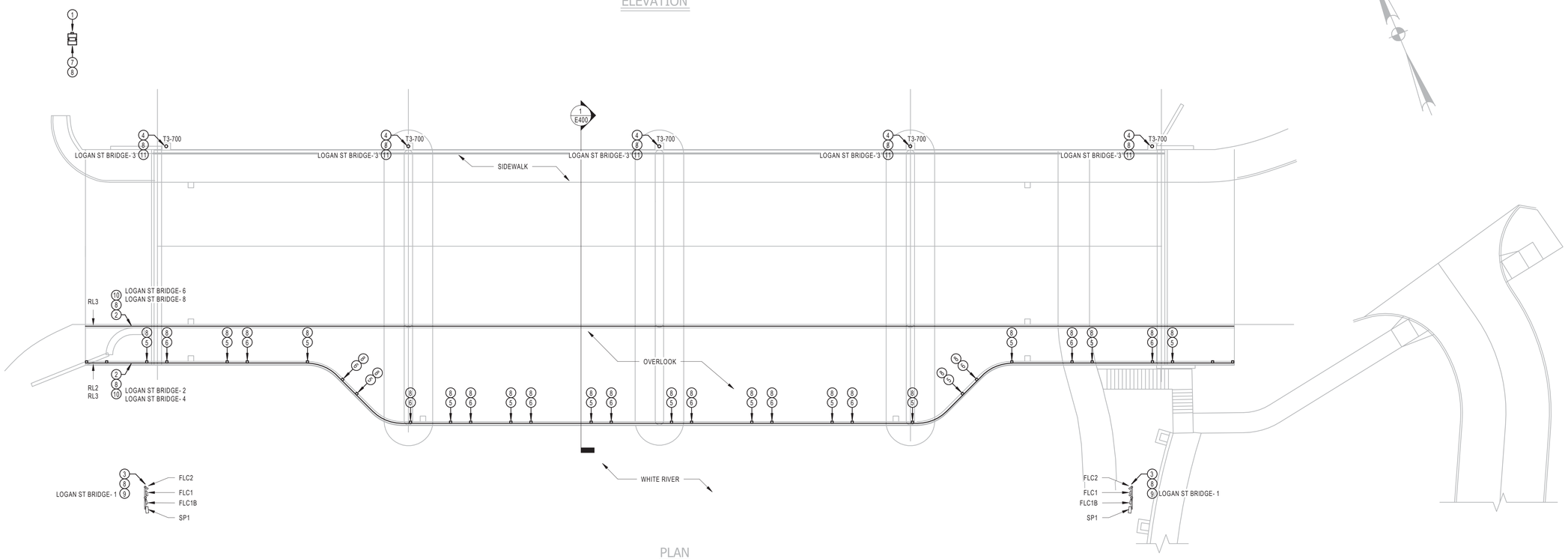

PLAN

1 Bridge Lighting Plan
1/16" = 1'-0"

FOR INFORMATION ONLY

UTILITY CONTACT

DUKE ENERGY
YARTO M BLEAH
YARTO.BLEAH@DUKE-ENERGY.COM
317.385.8175
WORK ORDER #278-67208

GENESIS engineering group
91 South Main Street
Suite 200
Zionsville, IN 46077
Phone: 1.317.927.8307
www.genesis-engineering.com

Certified By: DAVID SHUCK REGISTERED No. 19700101 STATE OF INDIANA PROFESSIONAL ENGINEER

Revisions

Number	Date	Description

Drawn By: JAW
Checked By: JAW
Project Status: DESIGN DEVELOPMENT
Date: 17 JAN 2018

Title: BRIDGE LIGHTING PLAN

Project: **BRIDGE NO. 207 - LOGAN STREET OVER WHITE RIVER**
HAMILTON COUNTY

This drawing and its contents are then property of Genesis Engineering Group, and shall not be reproduced in whole or in part by any means, mechanical or electronic, without express written permission of Genesis Engineering Group. Copyright 2013, by Genesis Engineering Group, inc.

Drawing Number:
E200

C:\Users\jwalke\Documents\ESL - Logan Street Bridge_jwalke@genesis-engineering.com.rvt
4/18/2018 2:27:57 PM

FOR INFORMATION ONLY

LIGHT FIXTURE SCHEDULE

FIXTURE DESIGNATION	DESCRIPTION	VOLTAGE	WATTAGE	LAMP	LUMENS	MANUFACTURER - MODEL NUMBER	COUNT	TOTAL WATTAGE
FLC1	RGBW SPOT LIGHT	120 V	133 W	LED	7200	WE-EF - 667-6127 667-8125 667-9264-667-9332	2	266 W
FLC1B	RGBW SPOT LIGHT	120 V	133 W	LED	7200	WE-EF - 667-6127 667-9332	2	266 W
FLC2	RGBW SPOT LIGHT	120 V	90 W	LED	4800	WE-EF - 667-4127 667-8122 667-9244 667-9332	2	180 W
RL2	RGBW HAND RAIL 2'	120 V	20 W	LED	956	INTENSE LIGHTING - IVR2-RPS-ST-W-RGBW-30AS	16	320 W
RL3	RGBW HAND RAIL 3'	120 V	30 W	LED	1449	INTENSE LIGHTING - IVR2-RPS-ST-W-RGBW-30AS	161	4830 W
SP1	RGBW FACADE & FLOOD LIGHT	120 V	200 W	LED		INSIGHT - 17SP-200-RGBW-5-TR-INT-TW-VS-TA2	2	400 W
T3-700	RIVER WALK POST TOP FIXTURE	120 V	132 W	LED	9486	ARCHITECTURAL AREA LIGHTING - UCL-WND-FLR-T3-56LED-4K-700-WH-FTG-PM	5	660 W
							TOTAL WATTAGE	6922 W

Branch Panel: LOGAN ST BRIDGE

Location: Highway 19 Right-Of-Way
Supplied From: Utility
Mounting: Recessed
Enclosure Type: NEMA 3R

Voltage: 120/240 Single
Phase: 1
Wire: 3
Ground: Yes

Branch: Normal
A.I.C. Rating: 22,000
Main Type: MCB
Main Rating: 100A

General Panel Comments:
Contractor shall coordinate A.I.C. Rating with Duke Energy.

Circuit Number	Circuit Description	Trip	Poles	A		B		Poles	Trip	Circuit Description	Circuit Number
1	BRIDGE SPOT LIGHTS	20 A	1	1.1	1.3			1	20 A	BRIDGE SOUTHEAST HANDRAIL LIGHTING	2
3	BRIDGE POST TOP LIGHTS	20 A	1			0.7	1.3	1	20 A	BRIDGE SOUTHWEST HANDRAIL LIGHTING	4
5	SPARE	20 A	1	0	1.3			1	20 A	BRIDGE NORTHEAST HANDRAIL LIGHTING	6
7	SPARE	20 A	1			0	1.3	1	20 A	BRIDGE NORTHWEST HANDRAIL LIGHTING	8
9	SPARE	20 A	1	0	0			1	20 A	SPARE	10
11	SPARE	20 A	1			0	0	1	20 A	SPARE	12
			Total Load:	3.7 kVA		3.2 kVA					

Load Summary:

Load Classification	Connected Load	Demand Factor	Estimated Demand	Panel Totals	
Lighting	6922 VA	100.00%	6922 VA		
				Total Conn. Load:	6922 VA
				Total Est. Demand:	6922 VA
				Total Conn. Current:	29 A
				Total Est. Demand Current:	29 A

Remarks:

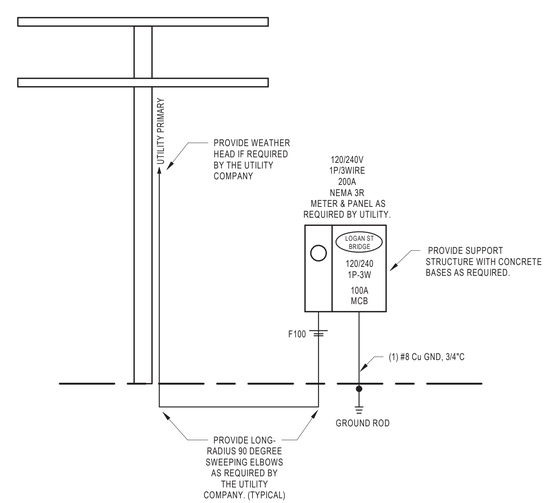

1 ELECTRICAL ONELINE RISER DIAGRAM
NO SCALE

FEEDER SIZING TABLE

DESIGNATION	CONDUCTOR SIZE PER CONDUIT		CONDUIT SIZE AND QUANTITY				
FXXX	PHASE & NEUTRAL	BUILDING GROUND	OR 1P, 1N, 1G 2P, 1G	OR 2P, 1N, 1G 3P, 1G	3P, 1N, 1G	3P, 3N, 1G	3P, 1N, 2G
F20	12	12	3/4"	3/4"	3/4"	3/4"	3/4"
F30	10	10	3/4"	3/4"	3/4"	3/4"	3/4"
F40-F50	8	10	3/4"	3/4"	3/4"	1"	3/4"
F60	6	10	3/4"	3/4"	1"	1"	1"
F70-F80	4	8	3/4"	1"	1-1/4"	1-1/4"	1-1/4"
F90-F100	3	8	1"	1"	1-1/4"	1-1/2"	1-1/4"
F110	2	6	1"	1-1/4"	1-1/4"	1-1/2"	1-1/4"
F125	1	6	1-1/4"	1-1/4"	1-1/2"	2"	1-1/2"
F150	1/0	6	1-1/4"	1-1/2"	1-1/2"	2"	2"
F175	2/0	6	1-1/4"	1-1/2"	2"	2-1/2"	2"
F200	3/0	6	1-1/4"	2"	2"	2-1/2"	2"

NOTES:
1. 20 A BRANCH CIRCUITS SHALL BE SIZED FOR VOLTAGE DROP. WIRE SIZES ARE NOT INDICATED ON THE DRAWINGS TO COMPENSATE FOR VOLTAGE DROP. FOR THESE CIRCUITS, CONTRACTOR SHALL UTILIZE WIRE SIZE SHOWNABOVE FOR DISTANCES LISTED ABOVE.
2. VOLTAGE DROP WIRE SIZES WILL BE STRICTLY INFORCED. CONTRACTOR SHALL SUBMIT A LIST OF CIRCUITS THAT WILL EXCEED THE DISTANCES ALLOWED AND INDICATE WIRE SIZE TO BE USED PRIOR TO ANY WIRE BEING INSTALLED.
3. DO NOT SHARE NEUTRAL CONDUCTORS FOR ANY BRANCH CIRCUITS. ALL BRANCH CIRCUIT SHALL HAVE SEPARATE, INDEPENDENT NEUTRAL CONDUCTORS.
4. ALL BRANCH CIRCUIT WIRING THAT WILL BE EXPOSED SHALL BE IN RIGID CONDUIT AND ALL BRANCH CIRCUIT WIRING UNDERGROUND SHALL BE IN PVC.
5. ALL CONDUIT PENETRATIONS THRU THE SLAB SHALL BE MADE WITH CAUTION. CONTRACTOR SHALL COORDINATE ALL HOLE LOCATIONS WITH STRUCTURAL ENGINEER PRIOR TO CUTTING ANY NEW HOLES. NEW HOLES SHALL BE ADJUSTED AS REQUIRED TO MISS REBAR AS DETERMINED BY THE STRUCTURAL ENGINEER.

GENESIS engineering group
91 South Main Street
Suite 200
Zionsville, IN 46077
Phone: 1.317.927.8307
www.genesis-engineering.com

DAVID SHUCK REGISTERED No. 19700101 STATE OF INDIANA PROFESSIONAL ENGINEER

Certified By:

Revisions

Number	Date	Description

Drawn By: JAW
Checked By: JAW
Project Status: DESIGN DEVELOPMENT
Date: 17 JAN 2018

Title: ELECTRICAL SCHEDULES

Project: **BRIDGE NO. 207 - LOGAN STREET OVER WHITE RIVER**
HAMILTON COUNTY

This drawing and its contents are then property of Genesis Engineering Group, and shall not be reproduced in whole or in part by any means, mechanical or electronic, without express written permission of Genesis Engineering Group. Copyright 2013, by Genesis Engineering Group, Inc.

Drawing Number:
E300

C:\Users\jwalke\Documents\ES3L - Logan Street Bridge_jwalke@genesis-engineering.com.rvt
4/18/2018 2:28:03 PM

INFORMATION PLATE

PANEL 1LN1 — LAMACOID PLATE; EQUIPMENT SERVED
120/208V 3P 4W. — VOLTAGE
FED FROM MDP — SOURCE OF POWER

NOTE: PROVIDE I.D. PLATE LABEL FOR ELECTRICAL EQUIPMENT SUCH AS MAIN SWITCHGEAR, SWITCHBOARD PANELBOARDS, AND TRANSFORMERS

1 ELECTRICAL EQUIPMENT I.D. LABELING DETAIL
NO SCALE

WARNING

Arc Flash Hazard
Appropriate PPE Required

Equipment Type	480V Switchgear
Grounding	Grounded
Work Distance	11 inches (300 mm)
Available 3-Ph Bolted Current	25 kA
Flash Protection Boundary	27 inches
Incident Energy at 11 inches	4.39 cal/cm2
Risk Category	2
Equipment Name:	Switchboard

NOTE: PROVIDE WARNING LABEL FOR ALL ELECTRICAL EQUIPMENT SUCH AS MAIN SWITCHGEAR, SWITCHBOARDS, PANELBOARDS, AND TRANSFORMERS.

2 ELECTRICAL EQUIPMENT WARNING LABEL DETAIL
NO SCALE

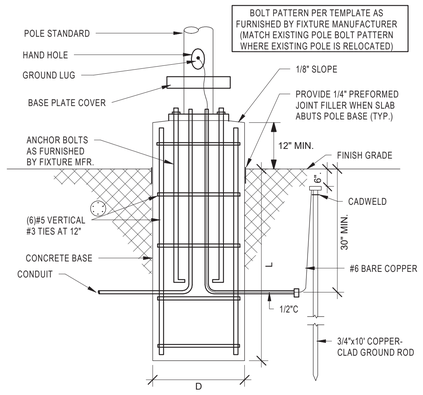

DIMENSIONS		
Pole Height	L	D
12'-0"	4'-6"	1'-6"
20'-0"	5'-0"	2'-0"
30'-0"	6'-0"	2'-6"
40'-0"	7'-0"	3'-0"

NOTES:

1. VERIFY ANCHOR BOLT LOCATIONS WITH MANUFACTURER'S TEMPLATE PRIOR TO BASE CONSTRUCTION

3 POLE BASE DETAIL - RAISED BASE
NO SCALE

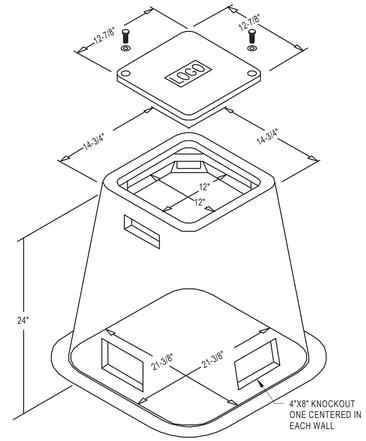

4 TYPICAL HANDHOLE DETAIL
NO SCALE

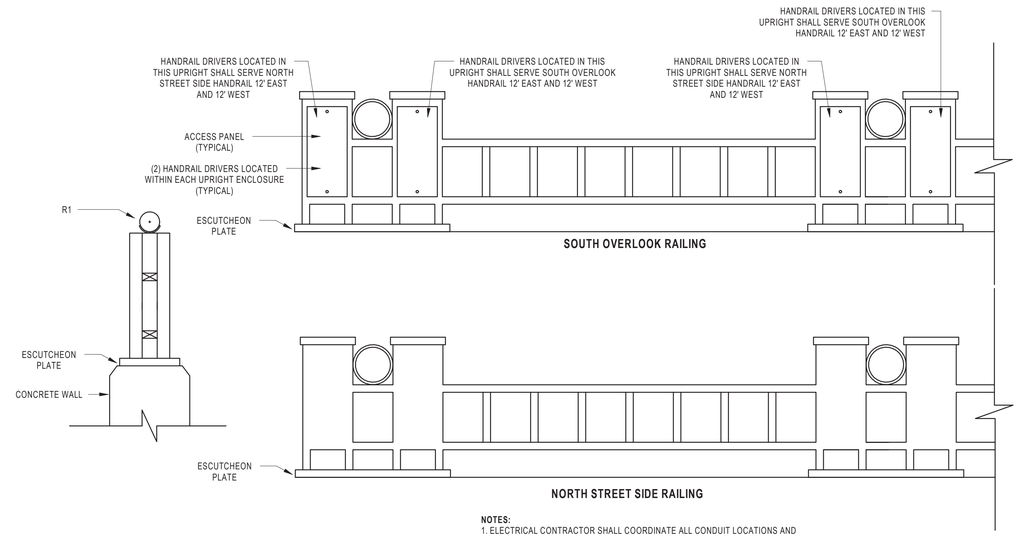

NOTES:
1. ELECTRICAL CONTRACTOR SHALL COORDINATE ALL CONDUIT LOCATIONS AND ROUTING WITH BRIDGE DESIGN ENGINEER PRIOR TO BRIDGE INSTALLATION.

6 TYPICAL HANDRAIL DETAIL
NO SCALE

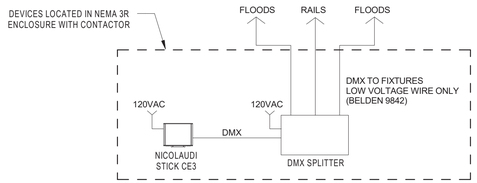

NOTES:
1. LINE VOLTAGE TO FIXTURES WILL BE RUN THROUGH AND CONTROLLED VIA CONTACTOR IN ENCLOSURE BELOW SERVICE PANEL
2. DMX WIRE TO BE DAISY CHAINED FROM FIXTURE TO FIXTURE.
3. FINAL FIXTURE IN RUN TO BE TERMINATED VIA TERMINATION RESISTOR TIED BETWEEN + AND - OF DMX CABLE.
4. PROVIDE PHOTOCELL FOR ON / OFF CONTROL.

5 DMX RISER DETAIL
NO SCALE

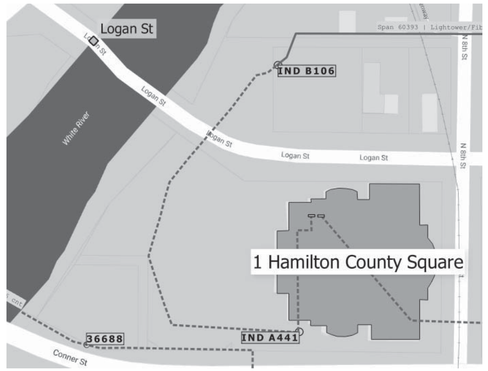

NOTES:
1. CONNECT LOGAN STREET BRIDGE LIGHTING CONTROLLERS TO SPLICE POINT 'IND B106'.
2. PROVIDE ALL WIRING, CONDUIT, JUNCTION BOXES, HANDHOLES, ETC. AS REQUIRED.
3. VERIFY ALL REQUIREMENTS WITH JOHN RUPPE WITH WITH CROWN CASTLE FIBER.
   a. 317.750.4039
   b. JOHN.RUPPE@CROWNCASTLE.COM

8 LOGAN ST. BRIDGE FIBER CONNECTION POINT
NO SCALE

FOR INFORMATION ONLY

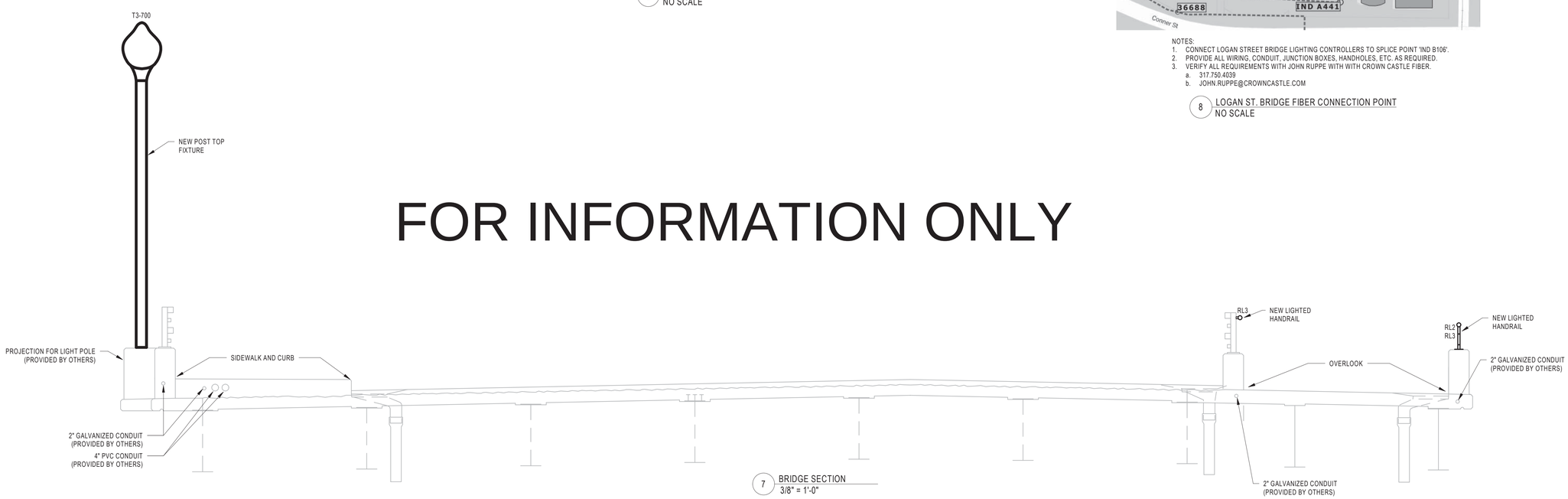

7 BRIDGE SECTION
3/8" = 1'-0"

GENESIS engineering group
91 South Main Street
Suite 200
Zionsville, IN 46077
Phone: 1.317.927.8307
www.genesis-engineering.com

Certified By: DAVID SHUCK REGISTERED No. 19700101 STATE OF INDIANA PROFESSIONAL ENGINEER

Revisions

Number	Date	Description

Drawn By: Author
Checked By: Checker
Project Status: BP6 SD/DD/CD %=VELOPMENT
Date: 33 JAN 2015

Title: ELECTRICAL DETAILS

Project: **PROJECT DESCRIPTION BP6REET OVER WHITE RIVER**

HAMILTON COUNTY

This drawing and its contents are then property of Genesis Engineering Group, and shall not be reproduced in whole or in part by any means, mechanical or electronic, without express written permission of Genesis Engineering Group. Copyright 2013, by Genesis Engineering Group, inc.

Drawing Number:

E400

C:\Users\jwalke\Documents\ESL - Logan Street Bridge_jwalke@genesis-engineering.com.rvt
4/18/2018 2:28:10 PM