HAMILTON COUNTY
LIGHTING AND ELECTRICAL
INSTALLATION PLANS
BRIDGE NO. 207
LOGAN STREET OVER WHITE RIVER

INDEX	
SHEET NO.	DESIGNATION
1	TITLE SHEET
2-6	TRAFFIC MAINTENANCE DETAILS - PHASES I, II & III
7-9	GENERAL PLAN
10-13	FLOOR DETAILS
E001	ELECTRICAL SYMBOLS AND NOTES
E100	BRIDGE LIGHTING DEMOLITION PLAN
E200	BRIDGE LIGHTING PLAN
E300	ELECTRICAL SCHEDULES
E400	ELECTRICAL DETAILS

TRAFFIC / DESIGN DATA	
A.A.D.T. (2011)	10,845V.P.D.
DIRECTIONAL DISTRIBUTION	50 %
TRUCKS	10 % A.A.D.T.
DESIGN SPEED	30 MPH
RURAL/URBAN	URBAN
ACCESS CONTROL	NONE

BRIDGE LENGTH	=	0.058 MILES
ROADWAY LENGTH	=	0.019 MILES
PROJECT LENGTH	=	0.077 MILES
MAX. GRADE	=	1.60 %

Note: Existing Structure and Elevations shown on these Plans are 0.59' Lower then the corresponding elevations on the Original Plans due to vertical Datum correction.

APPROVED: DATE _____

BOARD OF HAMILTON COUNTY COMMISSIONERS

_____
MARK HEIRBRANDT, PRESIDENT

_____
STEVEN C. DILLINGER, MEMBER

_____
CHRISTINE ALTMAN, MEMBER

ATTEST:

_____
ROBIN M. MILLS, AUDITOR

_____
JOEL THURMAN, P.E., ACTING COUNTY ENGINEER

LIGHTING SYSTEM INSTALLATION ON BRIDGE 207, LOGAN STREET OVER WHITE RIVER
LOCATED IN SECTION 36, T19N, R4E, HAMILTON COUNTY INDIANA

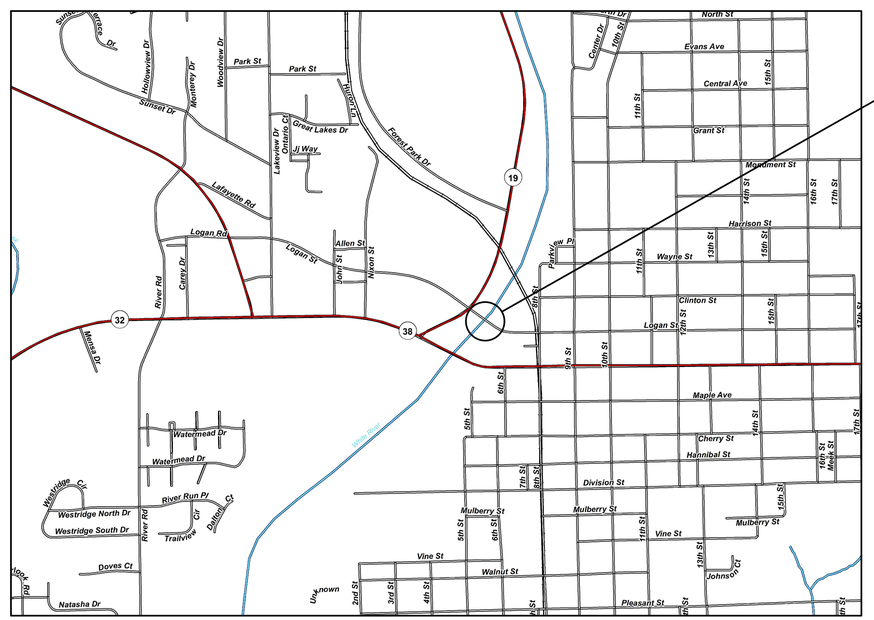

SCALE: NONE

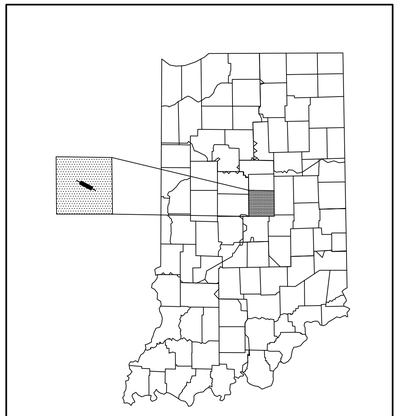

PROJECT LOCATION SHOWN BY
HAMILTON COUNTY

UTILITIES

DUKE ENERGY
Gabe Gibson
2515 North Morton St.
Franklin, In. 46131
317-736-2047
gabe.gibson@duke-energy.com

CITY OF NOBLESVILLE
Andrew Rodewald
16 South 10th St., Suite 155
Noblesville, Indiana 46060
317-776-6330
arodewald@noblesville.in.us

USGS
Paul Baker
317-600-2781
prbaker@usgs.gov

ZAYO BANDWIDTH
Waylon Higgins
9209 Castlegate Drive
Indianapolis, Indiana 46256
765-341-1199
waylon.higgins@zayo.com

INDIANA AMERICAN WATER
Mike Seals
555 East County Line Road, Suite 201
Greenwood, In. 46143
317-885-2444
michael.seals@amwater.com

CenturyLink (Level 3 Communications)
Xan Rypkema
1025 Eldorado Blvd.
Broomfield CO. 80021
xan.rypkema@centurylink.com

LIGHTOWER (FIBERTECH)
James Highsmith
300 Meridian Center
Rochester, New York 14618
585-697-5145
jhighsmith@loghtower.com

INDOT GREENFIELD DISTRICT
Larry Starkey
845 West Main ST.
Hancock County, Greenfield, IN. 46140
317-467-3423
lstarkey@indot.in.gov

Lat: 40°02'49"
Long: 86°00'60"

VICINITY MAP
HAMILTON COUNTY

INDIANA DEPARTMENT OF TRANSPORTATION STANDARD SPECIFICATIONS DATED 2018 AND THE 2017 NATIONAL ELECTRIC CODE TO BE USED WITH THESE PLANS.

FULL SIZE PLANS HAVE BEEN PREPARED USING STANDARD ENGINEERING SCALES. REDUCED SIZED PLANS WILL NOT CONFORM TO STANDARD SCALES.

TITLE AND INDEX

BRYAN WRIGHT REGISTERED No. PE11100630 STATE OF INDIANA PROFESSIONAL ENGINEER

RECOMMENDED FOR APPROVAL: _____ DESIGN ENGINEER 4/24/2018 DATE

DESIGNED: B. WRIGHT DRAWN: D. SHEETZ
CHECKED: D. SHEETZ CHECKED: B. WRIGHT

BRIDGE NO.207
OVER WHITE RIVER
HAMILTON COUNTY

Headquarters
8450 WESTFIELD BLVD., SUITE 300
INDIANAPOLIS, IN. 46240-8302
TEL 317-713-4615
FAX 317-713-4616
www.BFSEngr.com

BF&S Butler Fairman & Seufert CIVIL ENGINEERS

Branch Locations
FORT WAYNE 260-459-1532
LOUISVILLE 502-593-1996
LAFAYETTE 765-423-5602
MERRILLVILLE 219-769-2333
PLAINFIELD 317-839-3242

HORIZONTAL SCALE	BRIDGE FILE
AS NOTED	HAMILTON 207
VERTICAL SCALE	DESIGNATION
AS NOTED	N/A
SURVEY BOOK	SHEET 1 OF 18
CONTRACT	PROJECT
N/A	PB-18-0001

BFS NO. 6063

H:\606300.0000\ProDevelopment\Design\Drawings\606.39101.dwg Donald Sheetz Plot: 7/13/2018 8:22 AM Save: 7/12/2018 2:34 PM

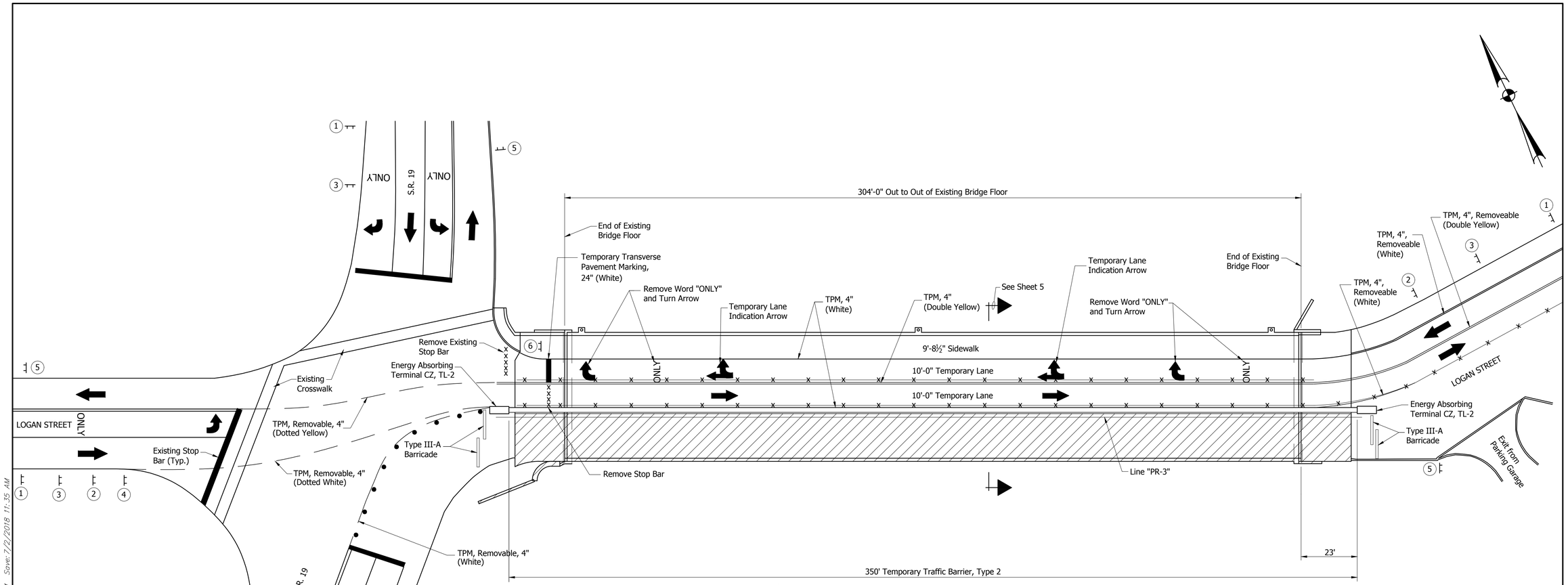

PHASE I-CONSTRUCTION

Scale: 1"=20'-0"

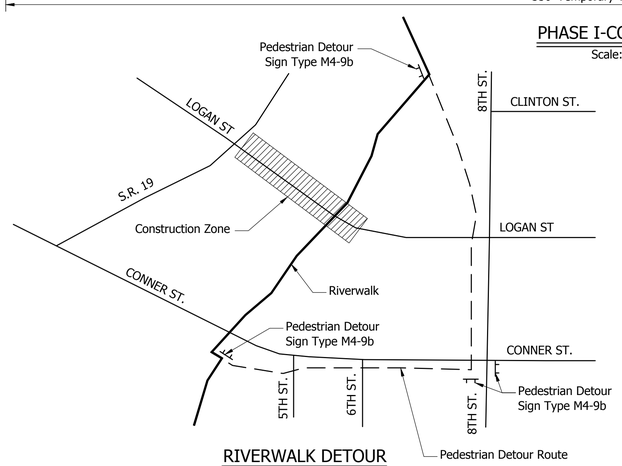

RIVERWALK DETOUR

Scale: None

FOR INFORMATION ONLY

LEGEND

1. XW20-1 Road Construction Ahead
2. XG20-5 Lane Closure Notice Sign
3. XW2-6-A Speeding/Reckless Driving Sign
4. XW1-4-A (L) Reverse Curve Sign
5. XG20-2 End Construction
6. R10-11 No Turn on Red
7. R3-1 No Right Turn (Trucks)

X——X Line Removal

TPM=Temporary Pavement Marking (Color and Width as Noted)

• Indicates Drum with Type "C" Steady Burning Light (Not a Pay Item)

Construction Area

NOTES

Signs shall be placed as shown on the Plans or as directed by the Engineer.

All Construction Signs to have Low Intensity Flashing Yellow Light, Type A.

See special provisions for MOT coordination East of the project site

TRAFFIC MAINTENANCE DETAILS

BRYAN WRIGHT REGISTERED No. PE11100630 STATE OF INDIANA PROFESSIONAL ENGINEER

RECOMMENDED FOR APPROVAL: DESIGN ENGINEER 4/24/2018 DATE

DESIGNED: D. SHEETZ DRAWN: D. SHEETZ

CHECKED: B. WRIGHT CHECKED: B. WRIGHT

BRIDGE NO.207
OVER WHITE RIVER
HAMILTON COUNTY

Headquarters
8450 WESTFIELD BLVD., SUITE 300
INDIANAPOLIS, IN. 46240-8302
TEL 317-713-4615
FAX 317-713-4616
www.BFSEngr.com

Branch Locations
FORT WAYNE 260-459-1532
LOUISVILLE 502-593-1996
LAFAYETTE 765-423-5602
MERRILLVILLE 219-769-2333
PLAINFIELD 317-839-3242

Butler Fairman & Seufert
CIVIL ENGINEERS

HORIZONTAL SCALE	BRIDGE FILE
AS NOTED	HAMILTON 207
VERTICAL SCALE	DESIGNATION
AS NOTED	N/A
SURVEY BOOK	SHEET
	2 OF 18
CONTRACT	PROJECT
N/A	PB-18-0001

BFS NO. 6063

H:\606300.0000\ProjDevelopment\Design\Drawings\606383810.dwg Donald Sheetz Plot: 7/2/2018 2:22 PM Save: 7/2/2018 11:35 AM

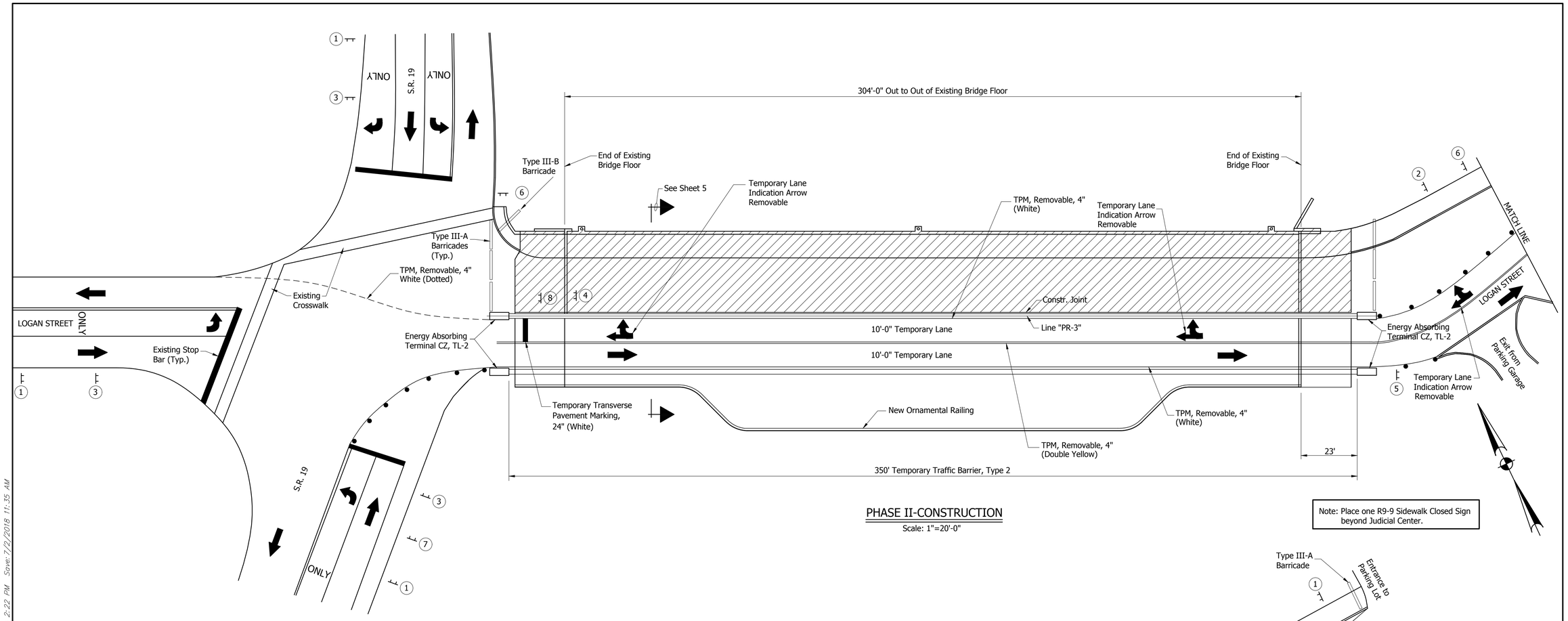

PHASE II-CONSTRUCTION

Scale: 1"=20'-0"

Note: Place one R9-9 Sidewalk Closed Sign beyond Judicial Center.

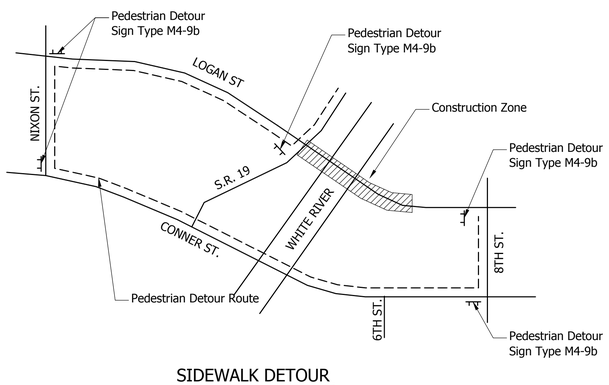

SIDEWALK DETOUR

Scale: None

FOR INFORMATION ONLY

LEGEND

1. XW20-1 Road Construction Ahead
2. XG20-5 Lane Closure Notice Sign
3. XW2-6-A Speeding/Reckless Driving Sign
4. XW1-4-A (R) Reverse Curve Sign
5. XG20-2 End Construction
6. R9-9 Sidewalk Closed
7. R3-1 No Right Turn (Trucks)
8. R10-11 No Turn on Red

X—X Line Removal

TPM=Temporary Pavement Marking (Color and Width as Noted)

• Indicates Drum with Type "C" Steady Burning Light (Not a Pay Item)

Construction Area

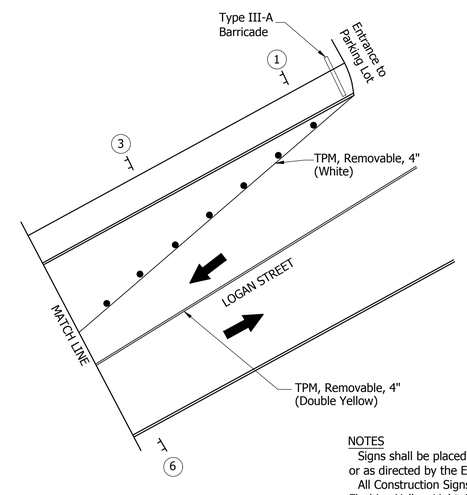

NOTES

Signs shall be placed as shown on the Plans or as directed by the Engineer.

All Construction Signs to have Low Intensity Flashing Yellow Light, Type A.

TRAFFIC MAINTENANCE DETAILS

BRYAN WRIGHT REGISTERED No. PE11100630 STATE OF INDIANA PROFESSIONAL ENGINEER

RECOMMENDED FOR APPROVAL: DESIGN ENGINEER 4/24/2018 DATE

DESIGNED: D. SHEETZ DRAWN: D. SHEETZ

CHECKED: B. WRIGHT CHECKED: B. WRIGHT

BRIDGE NO.207
OVER WHITE RIVER
HAMILTON COUNTY

Headquarters
8450 WESTFIELD BLVD., SUITE 300
INDIANAPOLIS, IN. 46240-8302
TEL 317-713-4615
FAX 317-713-4616
www.BFSEngr.com

Branch Locations
FORT WAYNE 260-459-1532
LOUISVILLE 502-593-1996
LAFAYETTE 765-423-5602
MERRILLVILLE 219-769-2333
PLAINFIELD 317-839-3242

BFS Butler Fairman Seufert CIVIL ENGINEERS

HORIZONTAL SCALE	BRIDGE FILE
AS NOTED	HAMILTON 207
VERTICAL SCALE	DESIGNATION
AS NOTED	N/A
SURVEY BOOK	SHEET
	3 OF 18
CONTRACT	PROJECT
N/A	PB-18-0001

6063

BFS NO.

H:\606300.0000\Pro_Development\Design\Drawings\606-3311.dwg Donald Sheetz Plot: 7/2/2018 2:22 PM Saved: 7/2/2018 11:35 AM

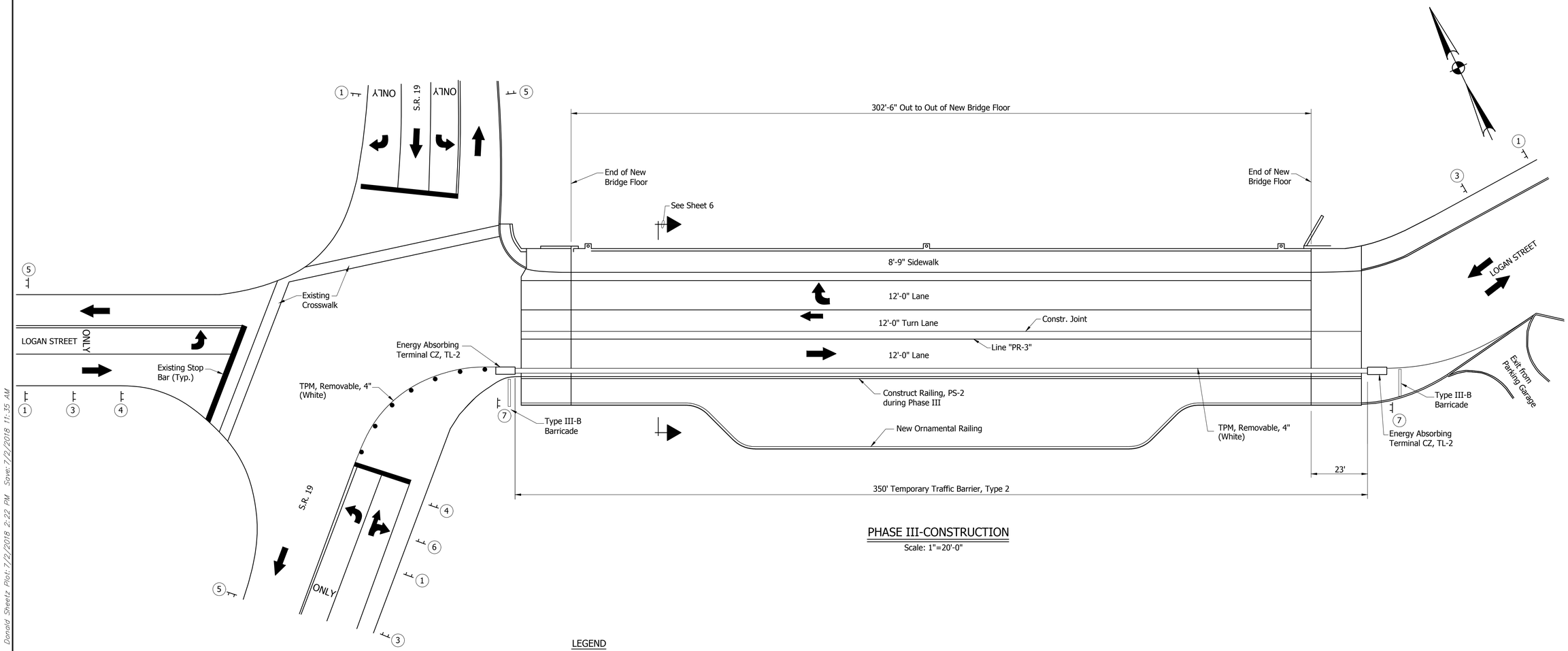

PHASE III-CONSTRUCTION

Scale: 1"=20'-0"

LEGEND

1. XW20-1 Road Construction Ahead
2. XG20-3 Road Closed Ahead
3. XW2-6-A Speeding/Reckless Driving Sign
4. XW21-5 Shoulder Closed Ahead
5. XG20-2 End Construction
6. R3-1 No Right Turn (Trucks)
7. R9-9 Sidewalk Closed

Construction Area

FOR INFORMATION ONLY

NOTES

Signs shall be placed as shown on the Plans or as directed by the Engineer.

All Construction Signs to have Low Intensity Flashing Yellow Light, Type A.

TRAFFIC MAINTENANCE DETAILS

BRYAN WRIGHT REGISTERED No. PE11100630 STATE OF INDIANA PROFESSIONAL ENGINEER

RECOMMENDED FOR APPROVAL: 4/24/2018
DESIGN ENGINEER DATE

DESIGNED: D. SHEETZ DRAWN: D. SHEETZ
CHECKED: B. WRIGHT CHECKED: B. WRIGHT

BRIDGE NO.207
OVER WHITE RIVER
HAMILTON COUNTY

Headquarters
8450 WESTFIELD BLVD., SUITE 300
INDIANAPOLIS, IN. 46240-8302
TEL 317-713-4615
FAX 317-713-4616
www.BFSEngr.com

Branch Locations
FORT WAYNE 260-459-1532
LOUISVILLE 502-593-1996
LAFAYETTE 765-423-5602
MERRILLVILLE 219-769-2333
PLAINFIELD 317-839-3242

HORIZONTAL SCALE	BRIDGE FILE
AS NOTED	HAMILTON 207
VERTICAL SCALE	DESIGNATION
AS NOTED	N/A
SURVEY BOOK	SHEET 4 OF 18
CONTRACT	PROJECT
N/A	PB-18-0001

BFS NO. 6063

H:\606300.0000\ProjDevelopment\Design\Drawings\6063B312.dwg Donald Sheetz Plot: 7/2/2018 2:22 PM Save: 7/2/2018 11:35 AM

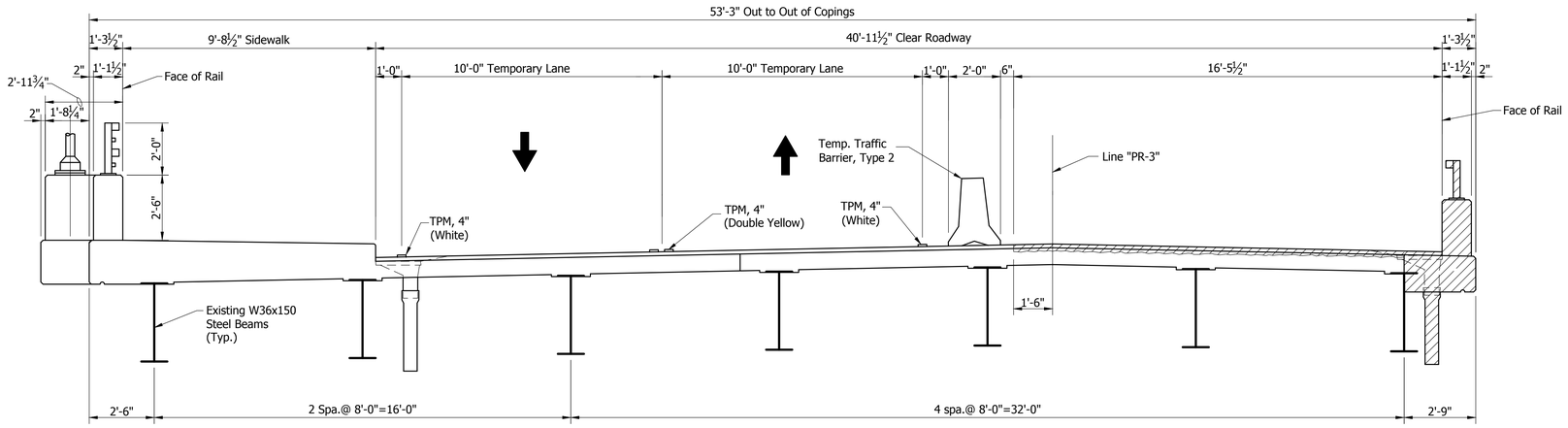

PHASE I

Scale: ⅜"=1'-0"

Note: Hatched Areas indicate Portions to be Removed

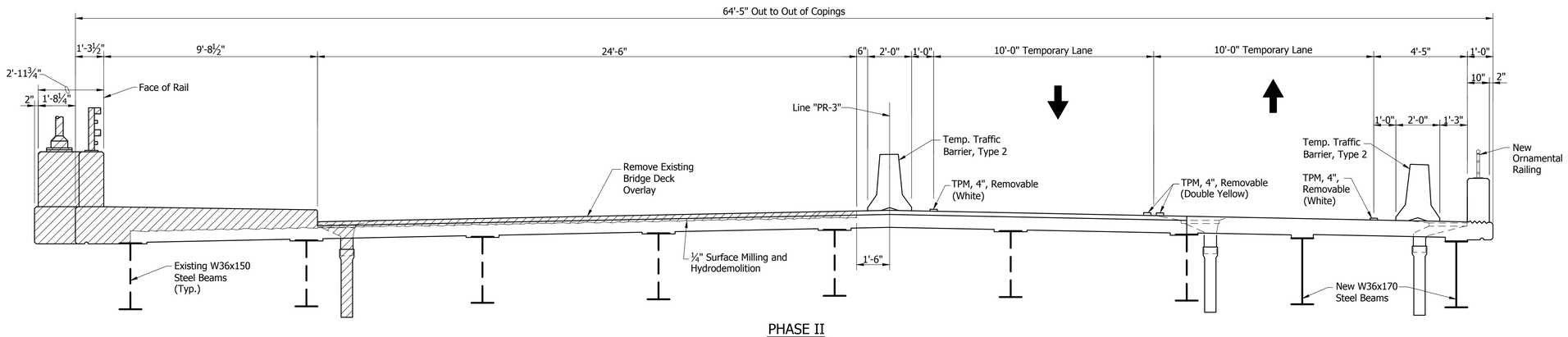

PHASE II

Scale: ⅜"=1'-0"

FOR INFORMATION ONLY

TRAFFIC MAINTENANCE DETAILS

BRYAN WRIGHT
REGISTERED
No. PE11100630
STATE OF INDIANA
PROFESSIONAL ENGINEER

RECOMMENDED FOR APPROVAL: _____ DESIGN ENGINEER 4/24/2018 DATE

DESIGNED: B. WRIGHT DRAWN: D. SHEETZ

CHECKED: D. SHEETZ CHECKED: B. WRIGHT

BRIDGE NO.207
OVER WHITE RIVER
HAMILTON COUNTY

Headquarters
8450 WESTFIELD BLVD., SUITE 300
INDIANAPOLIS, IN. 46240-8302
TEL 317-713-4615
FAX 317-713-4616
www.BFSEngr.com

BF&S Butler Fairman & Seufert CIVIL ENGINEERS

Branch Locations
FORT WAYNE 260-459-1532
LOUISVILLE 502-593-1996
LAFAYETTE 765-423-5602
MERRILLVILLE 219-769-2333
PLAINFIELD 317-839-3242

HORIZONTAL SCALE	BRIDGE FILE
AS NOTED	HAMILTON 207
VERTICAL SCALE	DESIGNATION
AS NOTED	N/A
SURVEY BOOK	SHEET
	5 OF 18
CONTRACT	PROJECT
N/A	PB-18-0001

BFS NO. 6063

H:\606300.0000\ProDevelopment\Design\Drawings\606383314.dwg Donald Sheetz Plot:7/2/2018 2:22 PM Save: 7/2/2018 11:35 AM

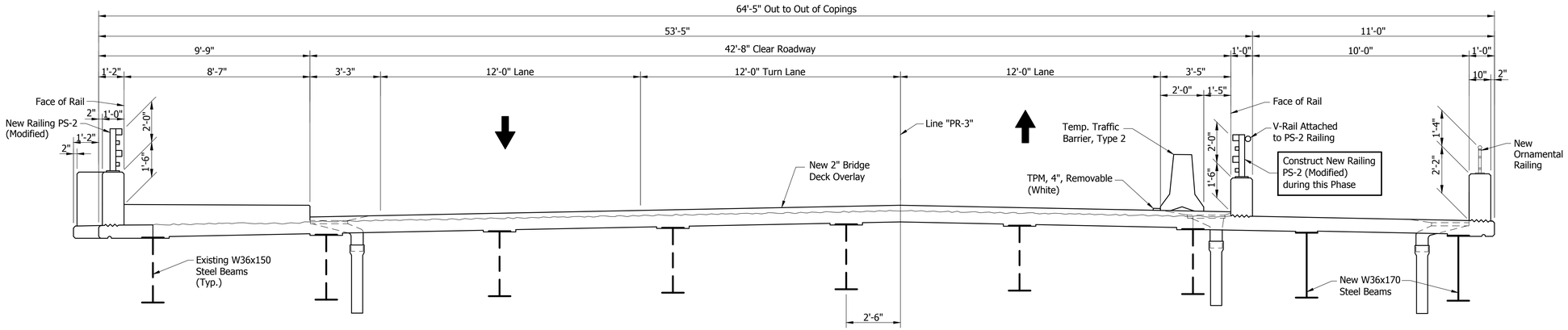

PHASE III

Scale: ⅜"=1'-0"

FOR INFORMATION ONLY

TRAFFIC MAINTENANCE DETAILS

BRYAN WRIGHT
REGISTERED
No.
PE11100630
STATE OF
INDIANA
PROFESSIONAL ENGINEER

RECOMMENDED FOR APPROVAL: 4/24/2018
DESIGN ENGINEER DATE

DESIGNED: B. WRIGHT DRAWN: D. SHEETZ
CHECKED: D. SHEETZ CHECKED: B. WRIGHT

BRIDGE NO.207
OVER WHITE RIVER
HAMILTON COUNTY

Headquarters
8450 WESTFIELD BLVD., SUITE 300
INDIANAPOLIS, IN. 46240-8302
TEL 317-713-4615
FAX 317-713-4616
www.BFSEngr.com

BF&S
Butler Fairman & Seufert
CIVIL ENGINEERS

Branch Locations
FORT WAYNE 260-459-1532
LOUISVILLE 502-593-1996
LAFAYETTE 765-423-5602
MERRILLVILLE 219-769-2333
PLAINFIELD 317-839-3242

HORIZONTAL SCALE	BRIDGE FILE
AS NOTED	HAMILTON 207
VERTICAL SCALE	DESIGNATION
AS NOTED	N/A

SURVEY BOOK	SHEET
	6 OF 18
CONTRACT	PROJECT
N/A	PB-18-0001

BFS NO. 6063

H:\606300.0000\ProDevelopment\Design\Drawings\606.18.314A.dwg Donald Sheetz Plot: 7/2/2018 2:22 PM Save: 7/2/2018 11:35 AM

STRUCTURE IS BUILT ON A 200' VERTICAL CURVE

1985 ORIGINAL P.G. DATA
P.V.I. Sta. 37+38.09
El. 769.31
V.C.=200'
+1.60% -1.24%

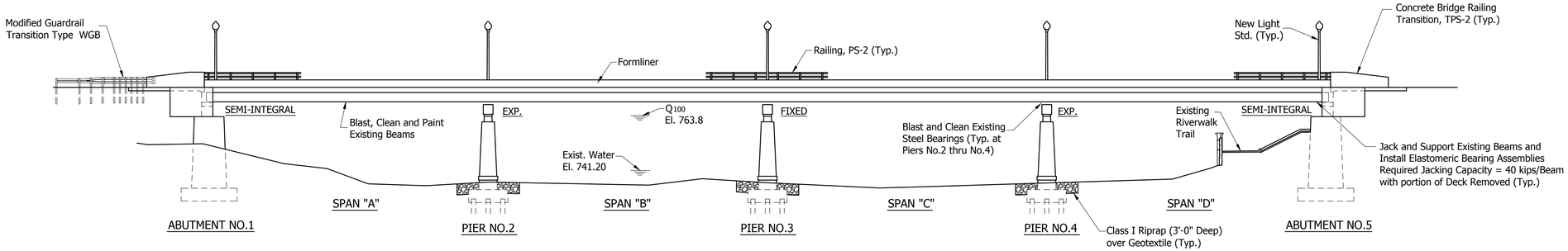

ELEVATION

Scale: 1/16"=1'-0"

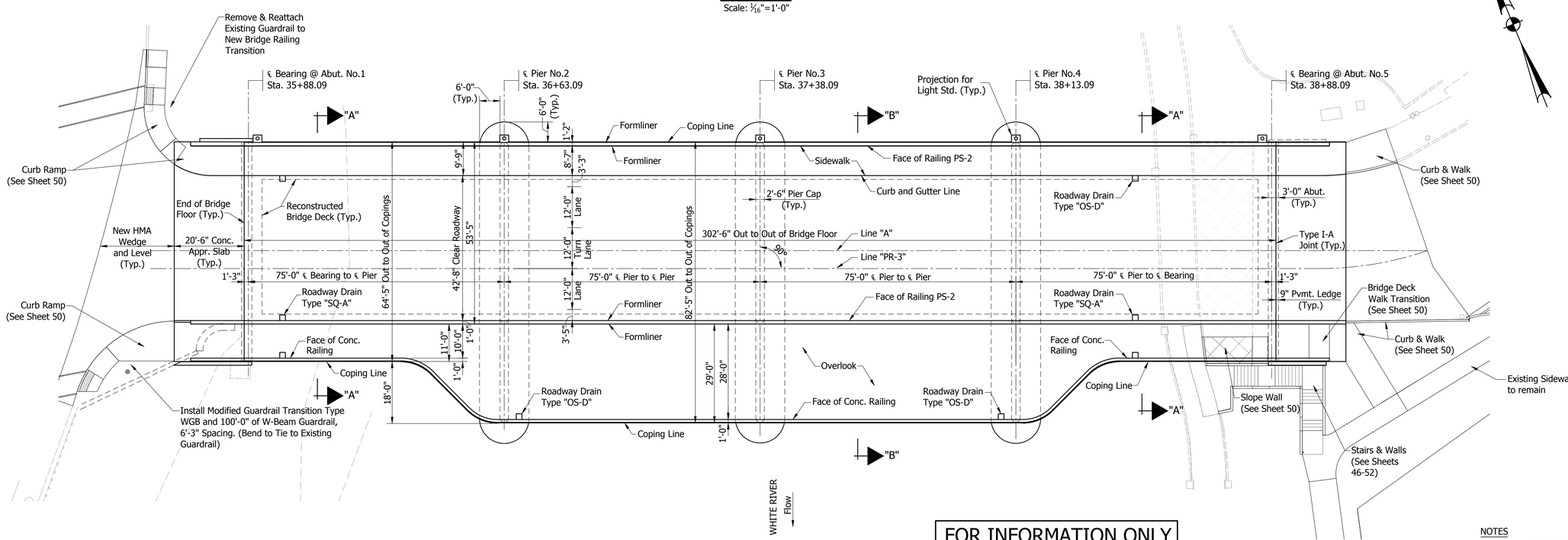

PLAN

Scale: 1/16"=1'-0"

FOR INFORMATION ONLY

NOTES

See Sheet 14 for Existing Structure General Plan.
See Sheet 17 for Section "A-A", General Notes, Design Data and Material Notes.
See Sheet 18 for Section "B-B".

GENERAL PLAN
PROPOSED STRUCTURE

BRYAN WRIGHT REGISTERED No. PE11100630 STATE OF INDIANA PROFESSIONAL ENGINEER

RECOMMENDED FOR APPROVAL: 4/24/2018
DESIGN ENGINEER DATE

DESIGNED: B. WRIGHT DRAWN: D. SHEETZ
CHECKED: D. SHEETZ CHECKED: B. WRIGHT

BRIDGE NO.207
OVER WHITE RIVER
HAMILTON COUNTY

Headquarters
8450 WESTFIELD BLVD., SUITE 300
INDIANAPOLIS, IN. 46240-8302
TEL 317-713-4615
FAX 317-713-4616
www.BFSEngr.com

Branch Locations
FORT WAYNE 260-459-1532
LOUISVILLE 502-593-1996
LAFAYETTE 765-423-5602
MERRILLVILLE 219-769-2333
PLAINFIELD 317-839-3242

BF&S Butler Fairman & Seufert CIVIL ENGINEERS

HORIZONTAL SCALE	BRIDGE FILE
AS NOTED	HAMILTON 207
VERTICAL SCALE	DESIGNATION
AS NOTED	N/A

SURVEY BOOK	SHEET
	7 OF 18
CONTRACT	PROJECT
N/A	PB-18-0001

6369

BR SN

H:\606300.0000\ProDevelopment\Design\Drawings\606387Z2.dwg Donald Sheetz Plot: 7/2/2018 2:23 PM Save: 7/2/2018 11:35 AM

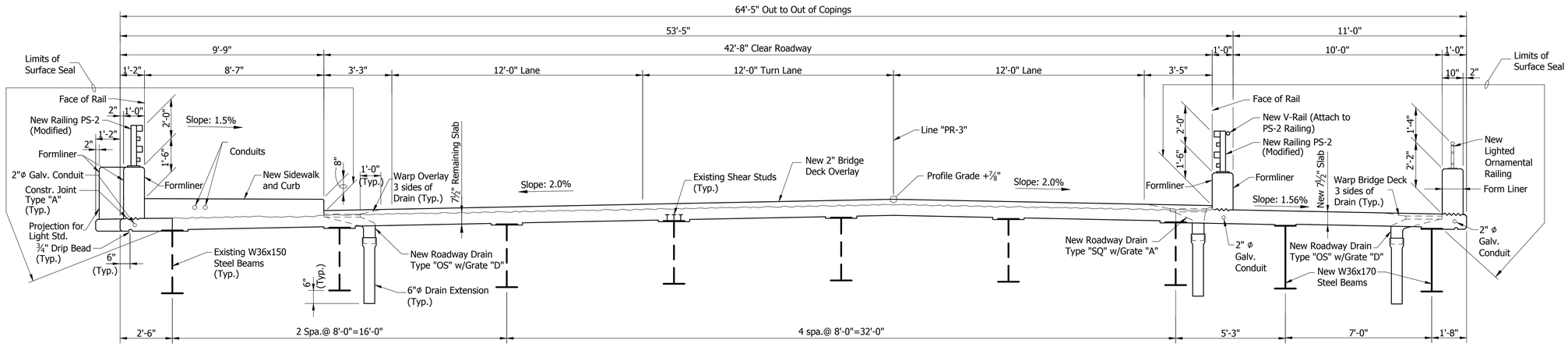

PROPOSED SECTION "A-A"

Scale: ⅜"=1'-0"

GENERAL NOTES

Plans for the existing structure are on file with the Hamilton County Highway Department as Hamilton 207 and are available upon request.

Portions of present structure shall be removed.

Where new work is to be fitted to old work, the Contractor shall check all dimensions and conditions in the field and report any errors or discrepancies to the Engineer and assume responsibility for their correctness and the fit of the new part to the old.

Epoxy coated reinforcing bars shall be required in various portions of the structure as shown.

Reinforcing bars covering shall be 2-1/2" in top of approach slabs.

Reinforcing bars covering shall be 2-1/2" in top and 1" in bottom of floor slabs and 2" in all other areas unless noted.

Reinforcing bars shall be A.S.T.M. A615, Grade 60.

Concrete shall be Class C in floor slab and bridge railings.

Concrete shall be Class "B" in Footings.

Concrete shall be Class "A" in all portions of the project not noted above.

Chamfer exposed corners of concrete 1" unless noted.

Surface seal shall be required as shown on the detailed areas of the structure as shown. Estimated quantity = 19255 Sft.

Permanent deck forms wiil not be permitted.

Paint existing and proposed beams RAL 7016 Anthracite Grey including exposed bearing assembly steel

MATERIAL NOTES

Bridge Deck Overlay:

2" Min. Latex Modified Portland Cement Concrete

HMA Wedge:

165 Lbs./Sys. HMA Surface Type D

DESIGN DATA

MATERIAL DESIGN STRENGTHS:

Class "C" Concrete	F'c = 4,000 p.s.i.
Class "A" Concrete	F'c = 3,500 p.s.i.
Class "B" Concrete	F'c = 3,000 p.s.i.
Reinforcing Bars (Grade 60)	Fy = 60,000 p.s.i.

LIVE LOAD:

HS20-44 loading with distribution in accordance with 2002 A.A.S.H.T.O. Specifications. Load Factor = 2.17

90 psf pedestrian loading or an H10-44 loading in accordance with 2009 A.A.S.H.T.O. Guide Specifications for Design of Pedestrian Bridges and subsequent interim Specifications.

Note: Beam 8 checked for HS-20 during Traffic Maintenance Operations per AASHTO Guide Specifications 2002.

FOR INFORMATION ONLY

GENERAL PLAN
PROPOSED STRUCTURE

BRYAN WRIGHT REGISTERED No. PE11100630 STATE OF INDIANA PROFESSIONAL ENGINEER

RECOMMENDED FOR APPROVAL: DESIGN ENGINEER 4/24/2018 DATE

DESIGNED: B. WRIGHT DRAWN: D. SHEETZ

CHECKED: M. EICHENAUER CHECKED: B. WRIGHT

BRIDGE NO.207
OVER WHITE RIVER
HAMILTON COUNTY

Headquarters
8450 WESTFIELD BLVD., SUITE 300
INDIANAPOLIS, IN. 46240-8302
TEL 317-713-4615
FAX 317-713-4616
www.BFSEngr.com

BF&S Butler Fairman & Seufert CIVIL ENGINEERS

Branch Locations
FORT WAYNE 260-459-1532
LOUISVILLE 502-593-1996
LAFAYETTE 765-423-5602
MERRILLVILLE 219-769-2333
PLAINFIELD 317-839-3242

HORIZONTAL SCALE	BRIDGE FILE
AS NOTED	HAMILTON 207
VERTICAL SCALE	DESIGNATION
AS NOTED	N/A
SURVEY BOOK	SHEET 8 OF 18
CONTRACT	PROJECT
N/A	PB-18-0001

BFS NO. 6063

H:\606300.0000\ProjDevelopment\Design\Drawings\606387224.dwg Donald Sheetz Plot:7/22/2018 2:23 PM Save:7/22/2018 11:35 AM

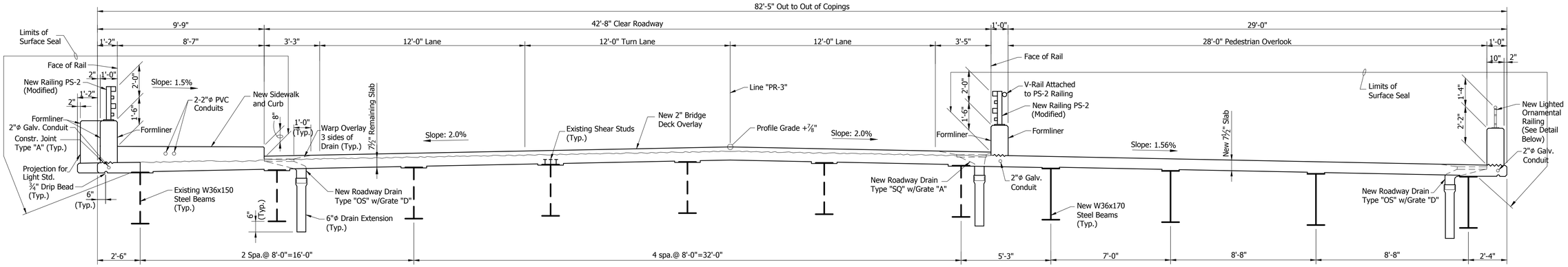

PROPOSED SECTION "B-B"
AT OVERLOOK
Scale: ⅜"=1'-0"

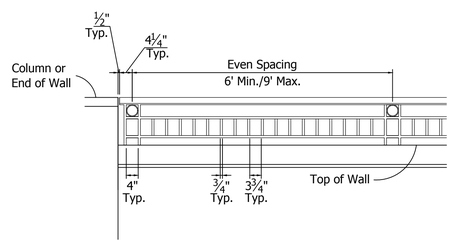

ELEVATION

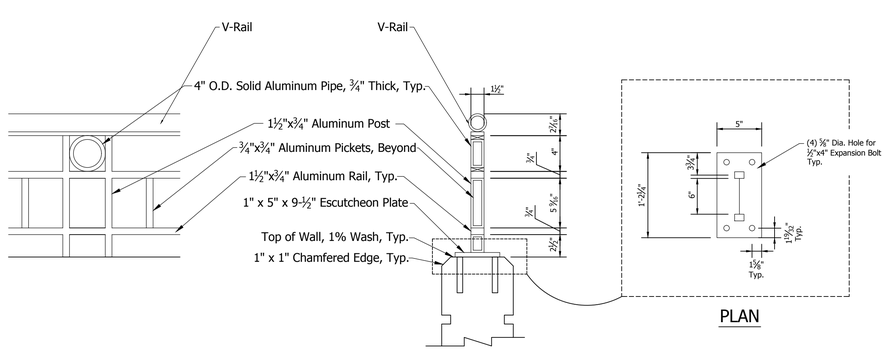

PLAN

ORNAMENTAL WALL RAILING DETAILS

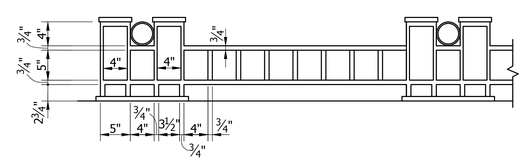

OVERLOOK SIDE RAILING DETAIL
Scale: 1"=1'-0"

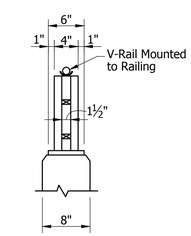

SECTION
Scale: 1"=1'-0"

FOR INFORMATION ONLY

GENERAL PLAN
PROPOSED STRUCTURE

NOTES
See Special Provisions for Rail Galvanizing Standards

BRYAN WRIGHT REGISTERED No. PE11100630 STATE OF INDIANA PROFESSIONAL ENGINEER

RECOMMENDED FOR APPROVAL: 4/24/2018
DESIGN ENGINEER DATE

DESIGNED: B. WRIGHT DRAWN: D. SHEETZ
CHECKED: M. EICHENAUER CHECKED: B. WRIGHT

BRIDGE NO.207
OVER WHITE RIVER
HAMILTON COUNTY

Headquarters
8450 WESTFIELD BLVD., SUITE 300
INDIANAPOLIS, IN. 46240-8302
TEL 317-713-4615
FAX 317-713-4616
www.BFSEngr.com

BF&S Butler Fairman & Seufert CIVIL ENGINEERING

Branch Locations
FORT WAYNE 260-459-1532
LOUISVILLE 502-593-1996
LAFAYETTE 765-423-5602
MERRILLVILLE 219-769-2333
PLAINFIELD 317-839-3242

HORIZONTAL SCALE	BRIDGE FILE
AS NOTED	HAMILTON 207
VERTICAL SCALE	DESIGNATION
AS NOTED	N/A
SURVEY BOOK	SHEET 9 OF 18
CONTRACT	PROJECT
N/A	PB-18-0001

BFS NO. 6063

H:\606300.0000\Pro\Development\Design\Drawings\606300225.dwg Donald Sheetz Plot: 7/23/2018 2:23 PM Save: 7/22/2018 11:35 AM

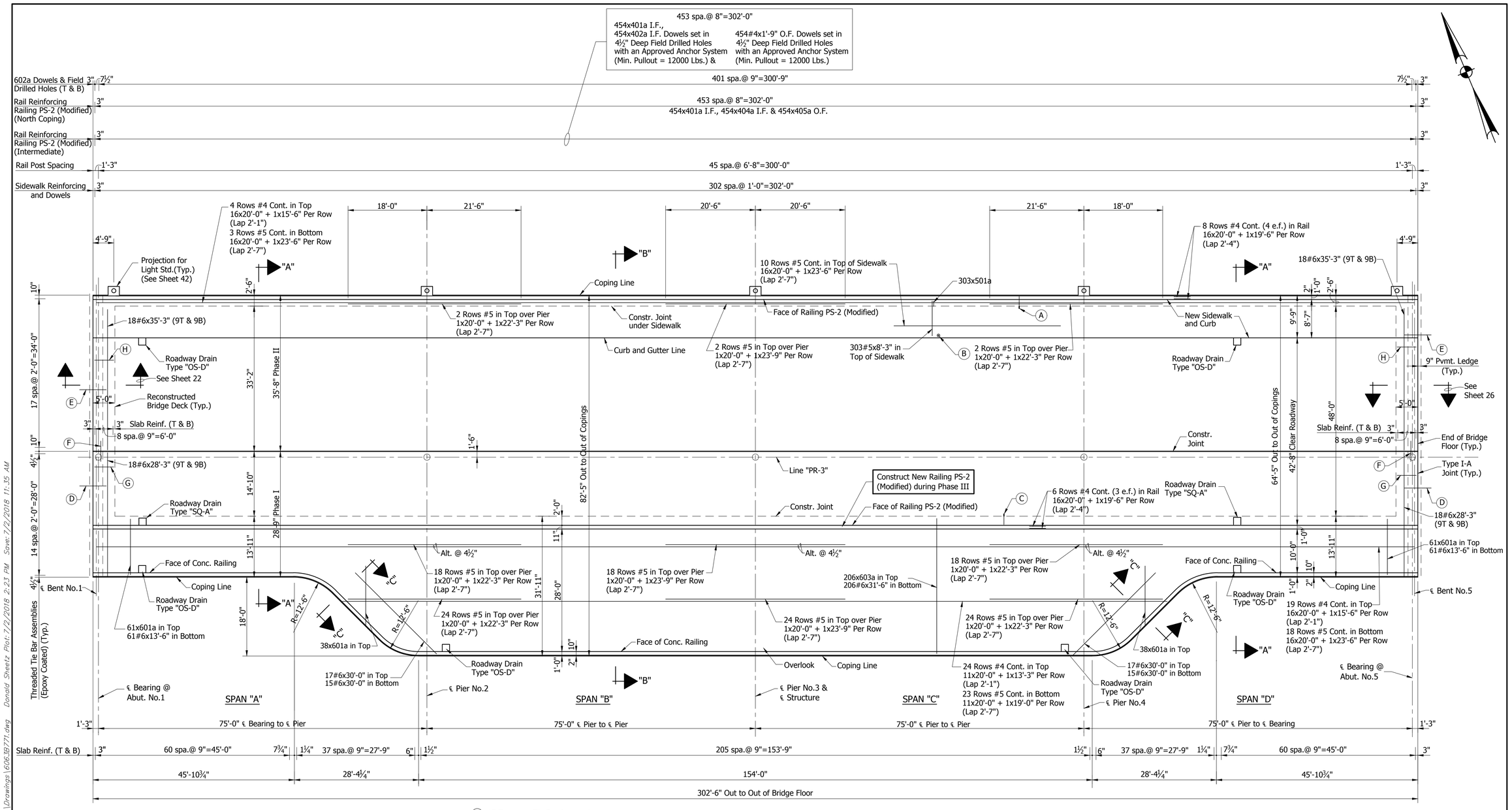

PLAN

Scale: 3/32"=1'-0"

(A) 808x602a Dowels (404T & 404B) set in 6¾" Deep Field Drilled Holes with an Approved Anchor System (Min. Pullout = 26400 Lbs.)

(B) 303x502a Dowels set in 5¾" Deep Field Drilled Holes with an Approved Anchor System (Min. Pullout = 18600 Lbs.)

(C) 808#6x3'-3" Dowels (404T & 404B) set in 6¾" Deep Field Drilled Holes with an Approved Anchor System (Min. Pullout = 26400 Lbs.)

(D) 15-Threaded Tie Bar Assemblies (#5x3'-0" each way) (Epoxy Coated)

(E) 18-Threaded Tie Bar Assemblies (#5x3'-0" each way) (Epoxy Coated)

(F) 18-Threaded Tie Bar Assemblies (9T & 9B) (#5x3'-0" each way) (Epoxy Coated)

(G) 20#4x4'-6" in Top @ 9" Max. Spa. 18#5x4'-6" in Bott. btwn. Beams @ 9" Max. Spa.

(H) 45#4x4'-6" in Top @ 9" Max. Spa. 36#5x4'-6" in Bott. btwn. Beams @ 9" Max. Spa.

NOTES

See Sheet 40 for Section "A-A" and Railing Details.
See Sheet 41 for Sections "B-B" and "C-C" thru Overlook.
See Sheet 42 for Bar Bending Details and Bills of Materials.

FLOOR DETAILS

FOR INFORMATION ONLY

BRYAN WRIGHT REGISTERED No. PE11100630 STATE OF INDIANA PROFESSIONAL ENGINEER

RECOMMENDED FOR APPROVAL: DESIGN ENGINEER — DATE 4/24/2018

DESIGNED: B. WRIGHT DRAWN: D. SHEETZ
CHECKED: C. OBRIEN CHECKED: B. WRIGHT

Headquarters
8450 WESTFIELD BLVD., SUITE 300
INDIANAPOLIS, IN. 46240-8302
TEL 317-713-4615
FAX 317-713-4616
www.BFSEngr.com

Butler Fairman Seufert

Branch Locations
FORT WAYNE 260-459-1532
LOUISVILLE 502-593-1996
LAFAYETTE 765-423-5602
MERRILLVILLE 219-769-2333
PLAINFIELD 317-839-3242

BRIDGE NO.207
OVER WHITE RIVER
HAMILTON COUNTY

HORIZONTAL SCALE	BRIDGE FILE
AS NOTED	HAMILTON 207
VERTICAL SCALE	DESIGNATION
AS NOTED	N/A
SURVEY BOOK	SHEET
	10 OF 18
CONTRACT	PROJECT
N/A	PB-18-0001

BFS NO. 6063

H:\606300.0000\ProDevelopment\Design\Drawings\606-3971.dwg Donald Sheetz Plot: 7/2/2018 2:23 PM Saved: 7/2/2018 11:35 AM

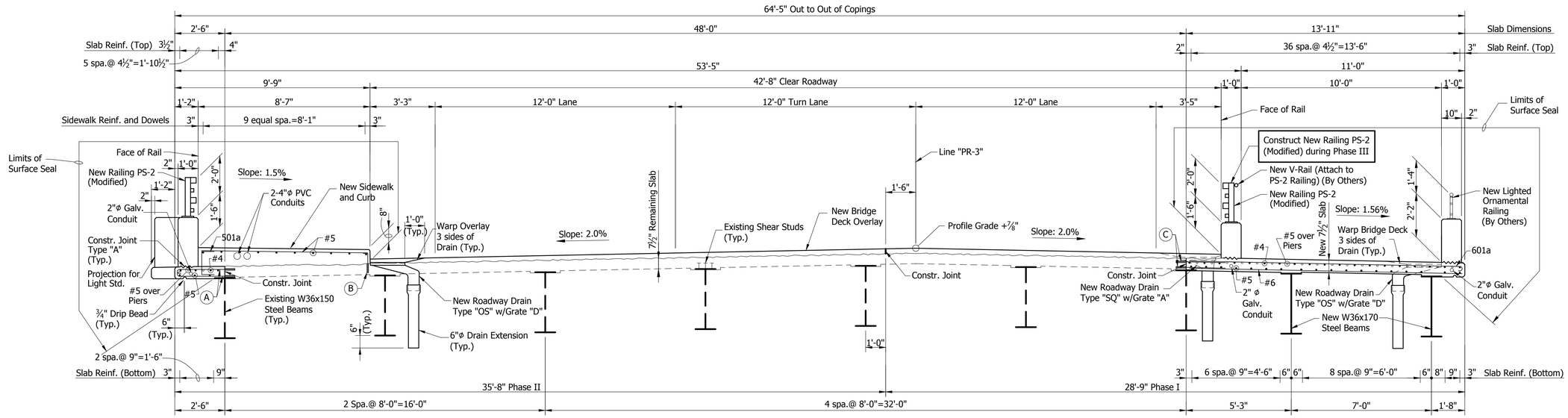

SECTION "A-A"

Scale: ⅜"=1'-0"

(A) 602a Dowels set in 6¾" Deep Field Drilled Holes with an Approved Anchor System (Min. Pullout = 26400 Lbs.)

(B) 502a Dowels set in 5¾" Deep Field Drilled Holes with an Approved Anchor System (Min. Pullout = 18600 Lbs.)

(C) #6x3'-3" Dowels set in 6¾" Deep Field Drilled Holes with an Approved Anchor System (Min. Pullout = 26400 Lbs.)

Note:
See Standard Drawing E706-BRPP-02 and E706-BRPP-04 for Add'l. Details.

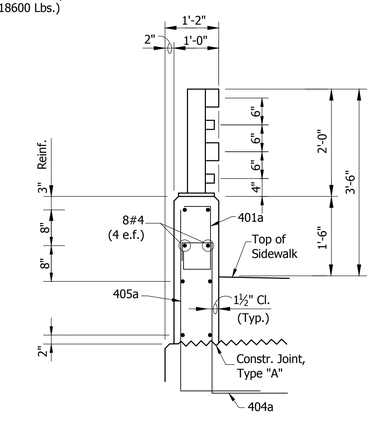

PS-2 (MODIFIED) RAILING SECTION AT SIDEWALK

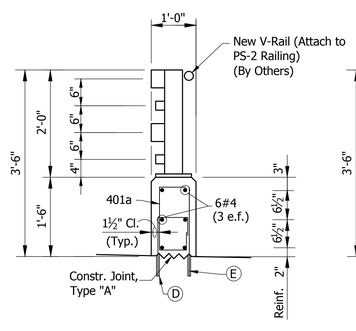

PS-2 (MODIFIED) RAILING SECTION ON BRIDGE DECK

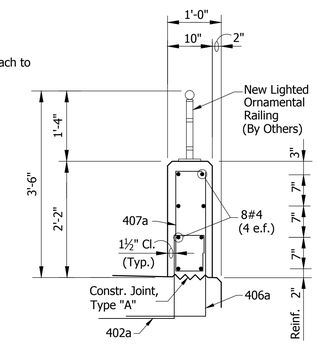

CONCRETE RAILING SECTION ALONG SOUTH COPING

TYPICAL RAIL SECTIONS

Not to Scale

(D) 402a Dowels set in 4½" Deep Field Drilled Holes with an Approved Anchor System (Min. Pullout = 12000 Lbs.)

(E) #4x1'-9" Dowels set in 4½" Deep Field Drilled Holes with an Approved Anchor System (Min. Pullout = 12000 Lbs.)

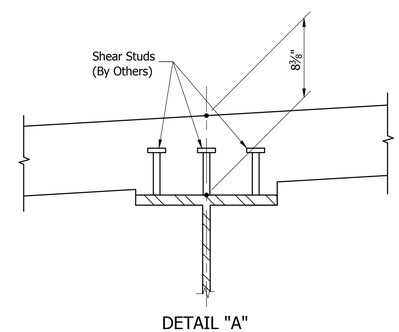

DETAIL "A"

Not to Scale

FLOOR NOTES

After the beams have been erected, concrete forms shall not be blocked against the end of beams in making any pours adjacent to the beam spans.

Suitable restraint shall be provided to prevent the rotation of the outside beams from construction loads such as finishing machines, forms, etc.

The top reinforcing in the slab shall be securely tied down to the slab forms and/or the beams to prevent lifting during concrete placement.

The Contractor may not use permanent metal deck forms.

Railing shall have Formliner applied to all sides.

FOR INFORMATION ONLY

NOTE
See Sheet 42 for Bar Bending Details and Bills of Materials.

FLOOR DETAILS

BRYAN WRIGHT REGISTERED No. PE11100630 STATE OF INDIANA PROFESSIONAL ENGINEER

RECOMMENDED FOR APPROVAL: DESIGN ENGINEER 4/24/2018 DATE

DESIGNED: B. WRIGHT DRAWN: D. SHEETZ
CHECKED: C. OBRIEN CHECKED: B. WRIGHT

BRIDGE NO.207
OVER WHITE RIVER
HAMILTON COUNTY

Headquarters
8450 WESTFIELD BLVD., SUITE 300
INDIANAPOLIS, IN. 46240-8302
TEL 317-713-4615
FAX 317-713-4616
www.BFSEngr.com

BF&S Butler Fairman & Seufert CIVIL ENGINEERS

Branch Locations
FORT WAYNE 260-459-1532
LOUISVILLE 502-593-1996
LAFAYETTE 765-423-5602
MERRILLVILLE 219-769-2333
PLAINFIELD 317-839-3242

HORIZONTAL SCALE	BRIDGE FILE
AS NOTED	HAMILTON 207
VERTICAL SCALE	DESIGNATION
AS NOTED	N/A
SURVEY BOOK	SHEET 11 OF 18
CONTRACT	PROJECT
N/A	PB-18-0001

BFS NO. 6063

H:\606300.0000\ProjDevelopment\Design\Drawings\606387T2.dwg Donald Sheetz Plot: 7/2/2018 2:23 PM Save: 7/2/2018 11:35 AM

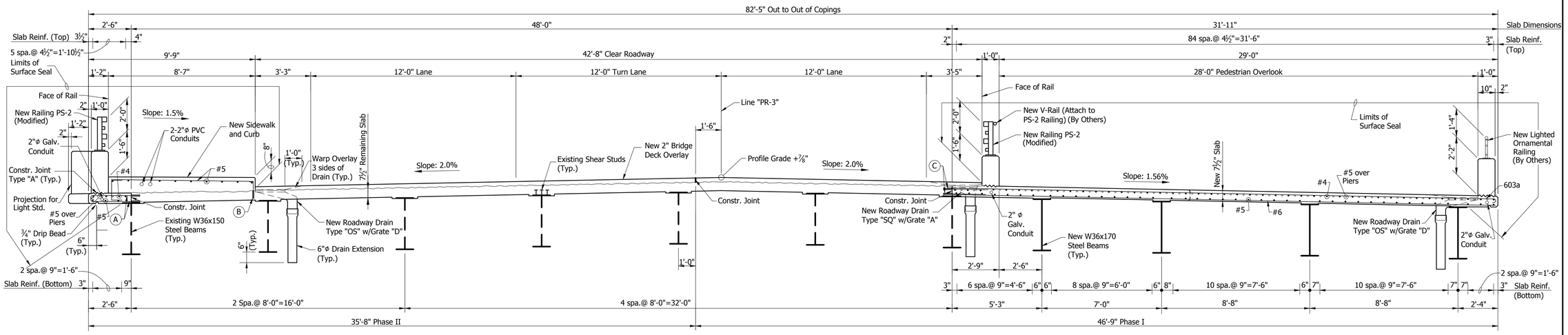

(A) 602a Dowels set in 6¾" Deep Field Drilled Holes with an Approved Anchor System (Min. Pullout = 26400 Lbs.)

(B) 502a Dowels set in 5¾" Deep Field Drilled Holes with an Approved Anchor System (Min. Pullout = 18600 Lbs.)

(C) #6x3'-3" Dowels set in 6¾" Deep Field Drilled Holes with an Approved Anchor System (Min. Pullout = 26400 Lbs.)

SECTION "B-B"

Scale: ⅜"=1'-0"

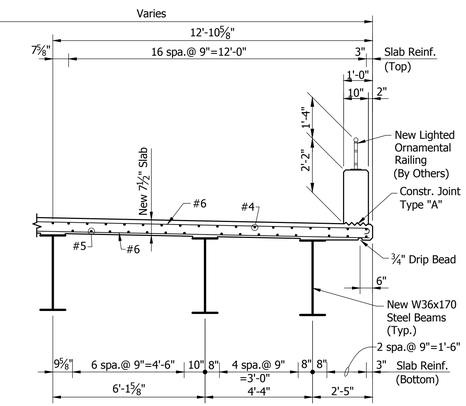

SECTION "C-C"

Scale: ⅜"=1'-0"

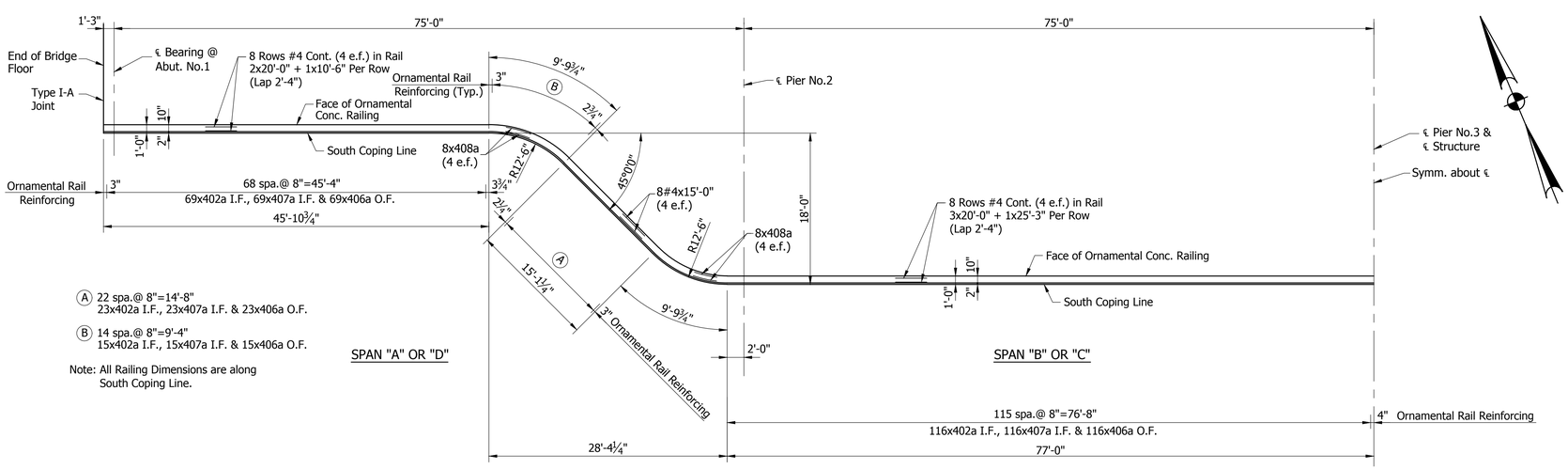

(A) 22 spa.@ 8"=14'-8"
23x402a I.F., 23x407a I.F. & 23x406a O.F.

(B) 14 spa.@ 8"=9'-4"
15x402a I.F., 15x407a I.F. & 15x406a O.F.

Note: All Railing Dimensions are along South Coping Line.

SPAN "A" OR "D"

SPAN "B" OR "C"

PLAN
ORNAMENTAL RAILING DETAIL ALONG SOUTH COPING
SPAN "A" AND "B" (SHOWN)
SPAN "C" AND "D" (OPP. HAND)

Scale: ⅛"=1'-0"

FOR INFORMATION ONLY

NOTE
See Sheet 42 for Bar Bending Details and Bills of Materials.

FLOOR DETAILS

BRYAN WRIGHT REGISTERED No. PE11100630 STATE OF INDIANA PROFESSIONAL ENGINEER

RECOMMENDED FOR APPROVAL: DESIGN ENGINEER 4/24/2018 DATE

DESIGNED: B. WRIGHT DRAWN: D. SHEETZ
CHECKED: C. OBRIEN CHECKED: B. WRIGHT

BRIDGE NO.207
OVER WHITE RIVER
HAMILTON COUNTY

Headquarters
8450 WESTFIELD BLVD., SUITE 300
INDIANAPOLIS, IN. 46240-8302
TEL 317-713-4615
FAX 317-713-4616
www.BFSEngr.com

Butler Fairman & Seufert CIVIL ENGINEERS

Branch Locations
FORT WAYNE 260-459-1532
LOUISVILLE 502-593-1996
LAFAYETTE 765-423-5602
MERRILLVILLE 219-769-2333
PLAINFIELD 317-839-3242

HORIZONTAL SCALE	BRIDGE FILE
AS NOTED	HAMILTON 207
VERTICAL SCALE	DESIGNATION
AS NOTED	N/A
SURVEY BOOK	SHEET 12 OF 18
CONTRACT	PROJECT
N/A	PB-18-0001

BFS NO. 6063

H:\606300.0000\Proj\Development\Design\Drawings\606387ZA.dwg Donald Sheetz Plot: 7/2/2018 2:23 PM Save: 7/2/2018 11:35 AM

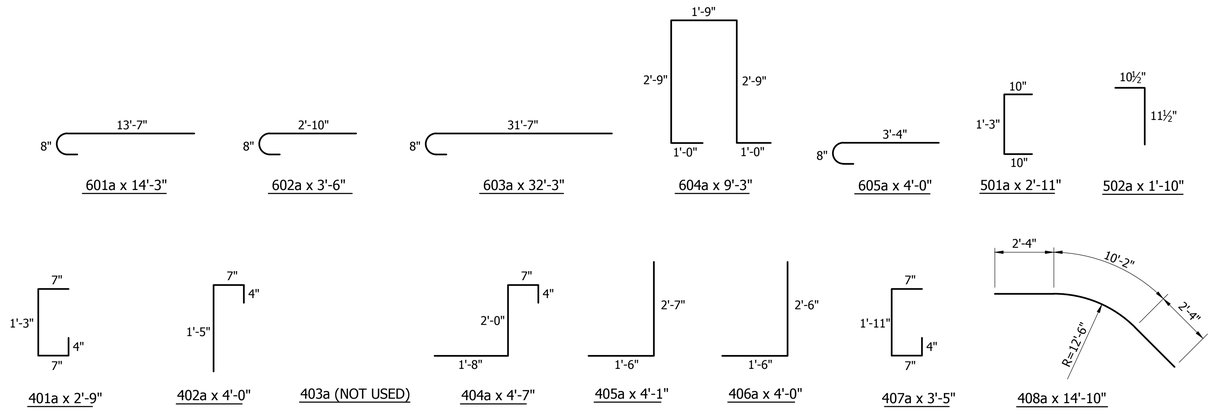

BAR BENDING DETAILS

Not to Scale

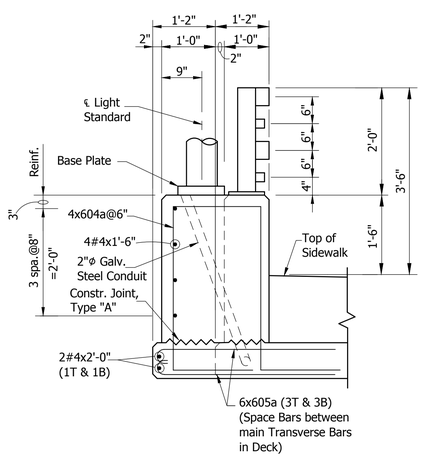

SECTION

Note:
See Standard Drawing 807-BLIT-01 for Additional Information.

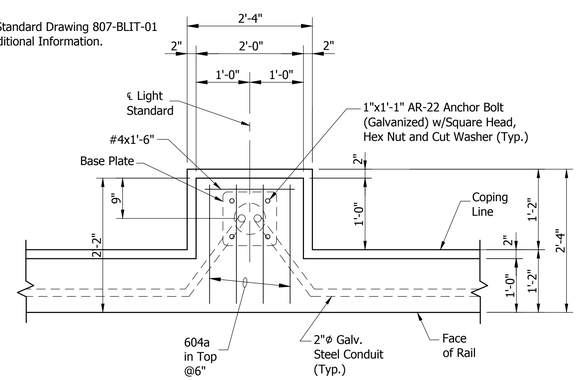

PLAN

DETAILS AT LIGHT STANDARD

Not to Scale

BILL OF MATERIALS SUPERSTRUCTURE PHASE I

REINFORCING BARS			
Mark or Size	No. of Bars	Length (Ft.)	Weight (Lbs.)
601a	198	14'-3"	
603a	206	32'-3"	
#6	206	31'-6"	
#6	64	30'-0"	
#6	36	28'-3"	
#6	122	13'-6"	
#6	808	3'-3"	
Total #6 (Epoxy Coated)			34792
#5	42	23'-9"	
#5	18	23'-6"	
#5	84	22'-3"	
#5	667	20'-0"	
#5	23	19'-0"	
#5	36	4'-6"	
Total #5 (Epoxy Coated)			17969
402a	476	4'-0"	
406a	476	4'-0"	
407a	476	3'-5"	
408a	32	14'-10"	
#4	16	25'-3"	
#4	648	20'-0"	
#4	19	15'-6"	
#4	16	15'-0"	
#4	24	13'-3"	
#4	16	10'-6"	
#4	40	4'-6"	
Total #4 (Epoxy Coated)			13676
Total Steel (Epoxy Coated)			66437

CONCRETE	
Class "C" in Superstructure	
Slab and End Bents	211.2 Cys.
Total Class "C"	211.2 Cys.
Railing, Concrete, PS-2	21.0 Cys.

MISCELLANEOUS	
Surface Seal	9962 Sft.
Threaded Tie Bar Assemblies	
(#5x3'-0" Ea. Way) (Epoxy Coated)	66 Each
Railing PS-2	302.5 Lft.
Field Drilled Holes in Concrete	808 Each
Bridge Deck Overlay	562 Sys.
Surface Milling	567 Sys.
Hydrodemolition	567 Sys.
2"ϕ Galvinazed Steel Conduit	700 Lft.
6"ϕ Drain Pipe Casting Extension	6 Each
Cast Iron Roadway Drains	
Type "OS-D"	4 Each
Additional Bridge Deck Overlay	4.0 Cys.
Cast Iron Roadway Drains	
Type "SQ-A"	2 Each

BILL OF MATERIALS SUPERSTRUCTURE PHASE II

REINFORCING BARS			
Mark or Size	No. of Bars	Length (Ft.)	Weight (Lbs.)
602a	808	3'-6"	
604a	20	9'-3"	
605a	30	4'-0"	
#6	36	35'-3"	
Total #6 (Epoxy Coated)			6612
501a	303	2'-11"	
502a	303	1'-10"	
#5	2	23'-9"	
#5	13	23'-6"	
#5	4	22'-3"	
#5	214	20'-0"	
#5	303	8'-3"	
#5	72	4'-6"	
Total #5 (Epoxy Coated)			9371
401a	454	2'-9"	
404a	454	4'-7"	
405a	454	4'-1"	
#4	192	20'-0"	
#4	8	19'-6"	
#4	4	15'-6"	
#4	90	4'-6"	
#4	10	2'-0"	
#4	20	1'-6"	
Total #4 (Epoxy Coated)			6477
Total Steel (Epoxy Coated)			22460

CONCRETE	
Class "C" in Superstructure	
Sidewalk	89.1 Cys.
Slab and End Bents	42.0 Cys.
Total Class "C"	131.1 Cys.
Railing, Concrete, PS-2	28.6 Cys.

MISCELLANEOUS	
Surface Seal	5004 Sft.
Threaded Tie Bar Assemblies	
(#5x3'-0" Ea. Way) (Epoxy Coated)	36 Each
Railing PS-2	302.5 Lft.
Field Drilled Holes in Concrete	1111 Each
Bridge Deck Overlay	867 Sys.
Surface Milling	752 Sys.
Hydrodemolition	752 Sys.
2"ϕ Galvinazed Steel Conduit	345 Lft.
6"ϕ Drain Pipe Casting Extension	2 Each
Cast Iron Roadway Drains	
Type "OS-D"	2 Each
Additional Bridge Deck Overlay	6.0 Cys.

BILL OF MATERIALS SUPERSTRUCTURE PHASE III

REINFORCING BARS			
Mark or Size	No. of Bars	Length (Ft.)	Weight (Lbs.)
401a	454	2'-9"	
402a	454	4'-0"	
#4	96	20'-0"	
#4	6	19'-6"	
#4	454	1'-9"	
Total Steel (Epoxy Coated)			3939

CONCRETE	
Railing, Concrete, PS-2 (Modified)	16.8 Cys.

MISCELLANEOUS	
Ornamental Railing	302.5 Lft.
Field Drilled Holes in Concrete	908 Each
Surface Seal	1207 Sft.

A.S.T.M. A615, Grade 60

FOR INFORMATION ONLY

FLOOR DETAILS

BRYAN WRIGHT REGISTERED No. PE11100630 STATE OF INDIANA PROFESSIONAL ENGINEER

RECOMMENDED FOR APPROVAL: 4/24/2018
DESIGN ENGINEER DATE

DESIGNED: B. WRIGHT DRAWN: D. SHEETZ
CHECKED: C. OBRIEN CHECKED: B. WRIGHT

BRIDGE NO.207
OVER WHITE RIVER
HAMILTON COUNTY

Headquarters
8450 WESTFIELD BLVD., SUITE 300
INDIANAPOLIS, IN. 46240-8302
TEL 317-713-4615
FAX 317-713-4616
www.BFSEngr.com

BF&S Butler Fairman & Seufert CIVIL ENGINEERING

Branch Locations
FORT WAYNE 260-459-1532
LOUISVILLE 502-593-1996
LAFAYETTE 765-423-5602
MERRILLVILLE 219-769-2333
PLAINFIELD 317-839-3242

HORIZONTAL SCALE	BRIDGE FILE
AS NOTED	HAMILTON 207
VERTICAL SCALE	DESIGNATION
AS NOTED	N/A
SURVEY BOOK	SHEET 13 OF 18
CONTRACT	PROJECT
N/A	PB-18-0001

BFS NO. 6063

H:\606300.0000\ProDevelopment\Design\Drawings\60638773.dwg Donald Sheetz Plot: 7/2/2018 2:23 PM Save: 7/2/2018 11:35 AM

GENERAL NOTES

(APPLY TO ALL ELECTRICAL SHEETS)

1. COORDINATE INSTALLATION OF LIGHT FIXTURES WITH APPLICABLE DRAWINGS.
2. ELECTRICAL CONTRACTOR SHALL VERIFY THE EXISTING CONDITIONS AT THE PROJECT SITE BEFORE SUBMITTING COST PROPOSAL.
3. ELECTRICAL CONTRACTOR SHALL REFER TO ALL APPLICABLE DRAWINGS TO FAMILIARIZE HIMSELF WITH EXTENT OF REMODELING / ALTERATION WORK.
4. ALL WORK SHALL CONFORM TO OR EXCEED THE MINIMUM REQUIREMENTS OF THE CURRENT ANSI / NFPA 70 WITH STATE AMENDMENTS, ENERGY CODE, ANSI / IEEE C2 AND ALL FEDERAL, STATE, LOCAL AND MUNICIPAL CODES AND ORDINANCES. THE ELECTRICAL SUBCONTRACTOR SHALL COMPLY WITH THE DIRECTIONS OF ALL AUTHORITIES HAVING JURISDICTION.
5. INSTALL WORK USING PROCEDURES DEFINED IN NECA STANDARDS OF INSTALLATION. ALL WORK SHALL PRESENT A NEAT MECHANICAL APPEARANCE WHEN COMPLETED.
6. COORDINATE ALL ELECTRICAL WORK WITH ALL OTHER TRADES TO ENSURE EFFECTIVE AND EFFICIENT OVERALL INSTALLATION.
7. COORDINATE ALL ELECTRICAL SYSTEM DOWNTIME WITH THE OWNER AND OTHER TRADES. IT IS MANDATORY THAT THE EXISTING BRIDGE REMAIN IN CONTINUOUS AND NON-INTERRUPTED OPERATION DURING THE REMODELING / ALTERING OF THE EXISTING STRUCTURE. THE SPECIFIC AREA(S) BEING REMODELED / ALTERED AT ANY TIME ARE OBVIOUSLY EXCLUSIVE OF THE STATEMENT. SERVICES TO EXISTING BUILDING SHALL BE KEPT ON CONTINUOUS OPERATION INCLUDING POWER, FIRE ALARM, LIGHTING, TELEPHONE, ETC. DOWNTIME OF THESE SYSTEMS SHALL BE MINIMIZED. WEEKEND AND AFTER HOURS WORK MAY BE REQUIRED TO PREVENT OR MINIMIZE INTERFERENCE WITH OWNERS OPERATION.
8. CONTRACTOR SHALL WORK CLOSELY WITH THE OWNER TO IDENTIFY ALL SYSTEMS WIRING, DEVICES, ETC. THAT MUST REMAIN OPERATIONAL DURING CONSTRUCTION. COORDINATE ALL DEMOLITION WITH THE OWNER PRIOR TO ANY DEMOLITION WORK.
9. WHERE DEVICES ARE OMITTED FROM PRESENT BRANCH CIRCUITS, THE REMAINING DEVICE SHALL BE REWIRED. IF NEEDED AND AS REQUIRED, TO REMAIN IN THEIR RESPECTIVE CIRCUITS AND IN OPERATING CONDITION.
10. ALL NEW EQUIPMENT SHALL BE SUBMITTED FOR APPROVAL PRIOR TO ORDERING. COORDINATE ELECTRICAL WORK FOR THIS EQUIPMENT WITH THE OTHER TRADES.
11. ALL BRANCH CIRCUITS SHALL UTILIZE SEPARATE INDEPENDENT NEUTRAL CONDUCTORS. DO NOT COMBINE NEUTRAL CONDUCTORS.
12. ALL FEEDER NEUTRAL / GROUNDED CONDUCTORS SHALL BE CONSIDERED CURRENT CARRYING. DERATE MULTIPLE CONDUCTORS IN A RACEWAY ACCORDINGLY WITH NEC TABLES.
13. INSTALL ALL CONDUITS AND RACEWAYS, FOR MAXIMUM HEAD CLEARANCE.
14. ALL DEVICES SHOWN ON THESE DRAWINGS TO BE REMOVED SHALL BE REMOVED COMPLETE INCLUDING ALL ASSOCIATED CONDUIT AND WIRING BACK TO SOURCE UNLESS OTHERWISE NOTED. ALL CIRCUIT BREAKERS OR EQUIPMENT MADE SPARE BY THE DEMOLITION SHALL BE TURNED OFF AND MARKED SPARE. IT IS THE INTENT THAT ALL EXISTING ELECTRICAL DEVICES, CONDUIT, WIRING, ETC. IN THIS SPACE THAT ARE NOT REUSED AND ARE ABANDONED SHALL BE REMOVED COMPLETE. CONTRACTOR SHALL FIELD VERIFY EXACT REQUIREMENTS. NOT ALL DEVICES ARE SHOWN ON THIS DRAWING.
15. ALL DEVICES AND LIGHT FIXTURES SHOWN TO BE REMOVED FROM EXISTING BLOCK WALLS THAT ARE NOT REUSED SHALL HAVE BLANK COVERS INSTALLED.
16. ALL DEVICES SHOWN TO BE REMOVED FROM EXISTING WALLS THAT REMAIN SHALL HAVE DEVICES AND ASSOCIATED CONDUIT REMOVED AND WALL SHALL BE PATCHED.
17. WIRING THAT IS TO BE INSTALLED EXPOSED SHALL BE INSTALLED NEATLY AND AT RIGHT ANGLES TO STRUCTURE. WIRING SHALL BE INDEPENDENTLY SUPPORTED AS REQUIRED. WIRING SHALL NOT LAY OVER OTHER TRADES.
18. NEW DEVICES SHALL MATCH EXISTING DEVICES AND COVERPLATES.
19. ELECTRICAL CONTRACTOR SHALL BE RESPONSIBLE FOR HIS OWN DEMOLITION, REMOVAL, CAPPING, STORING, ABANDONING, DISCONNECTION, RELOCATING AND RECONNECTION OF EXISTING ELECTRICAL EQUIPMENT AND MATERIAL. ALL CUTTING, PATCHING, REPAIRING, REPLACEMENT AND REFINISHING, SHALL MATCH THE EXISTING CONSTRUCTION AS NEARLY AS POSSIBLE.
20. ALL WIRING (POWER, LIGHTING) NOT REUSED FOR REMODELING AREAS SHALL BE COMPLETELY REMOVED BACK TO ASSOCIATED PANELS.
21. THE OWNER SHALL HAVE THE FIRST CHOICE TO ACCEPT EXISTING DEVICES BEING REMOVED.
22. REMOVE ALL ABANDONED CONDUITS, BOXES AND WIRING WITHIN PROJECT AREA.
23. CONTRACTOR SHALL PROTECT EXISTING CABLES DURING ALL PHASES OF CONSTRUCTION.
24. ALL LIGHT FIXTURES THAT ARE TAKEN OUT OF SERVICE AND NOT REUSED SHALL zeBE RETURNED TO THE OWNER.

UTILITY CONTACT

DUKE ENERGY
YARTO M BLEAH
YARTO.BLEAH@DUKE-ENERGY.COM
317.385.8175
WORK ORDER #278-67208

VOLTAGE DROP

(APPLY TO ALL ELECTRICAL SHEETS)
1. VOLTAGE DROP IS NOT SHOWN ON THE DRAWINGS. THE ELECTRICAL CONTRACTOR SHALL BE RESPONSIBLE FOR ADJUSTING ALL FEEDER AND BRANCH CIRCUIT CONDUCTOR SIZES TO COMPLY THE NATIONAL ELECTRICAL CODE AND ALL STATE AND LOCAL CODES VOLTAGE DROP REQUIREMENTS.
2. THE ELECTRICAL CONTRACTOR SHALL UPSIZE FEEDER AND BRANCH CIRCUIT CONDUCTORS AS REQUIRED BASED ON ACTUAL INSTALLED CONDUCTOR LENGHTS.
3. VOLTAGE DROP ON FEEDERS SHALL NOT EXCEED 2 PERCENT.
4. VOLTAGE DROP ON BRANCH CIRCUITS SHALL NOT EXCEED 3 PERCENT.

LIGHTING

SYMBOL	DESCRIPTION
	NO SHADING INDICATES NORMAL POWER
	HALF SHADED INDICATES LIFE SAFETY POWER
	FULL SHADED INDICATES EMERGENCY POWER
	24" x 48" LIGHTING FIXTURE
	24" x 24" LIGHTING FIXTURE
	12" x 48" LIGHTING FIXTURE
	12" x 36" LIGHTING FIXTURE
	12" x 24" LIGHTING FIXTURE
	12" x 12" LIGHTING FIXTURE
	12" x 96" LIGHTING FIXTURE
	6" x 96" LIGHTING FIXTURE
	6" x 48" LIGHTING FIXTURE
	6" x 36" LIGHTING FIXTURE
	6" x 24" LIGHTING FIXTURE
	8" DOWNLIGHT
	6" DOWNLIGHT
	4" DOWNLIGHT
	WALL MOUNTED LIGHT
	CEILING EXIT LIGHT (DUAL FACED)
	CEILING EXIT LIGHT (SINGLE FACE)
	WALL EXIT LIGHT
	WALL EXIT WITH EMERGENCY LIGHTS
	WALL EXIT WITH INTERIOR AND EXTERIOR EMERGENCY LIGHTS
	EXIT LIGHT DIRECTIONAL ARROWS
	WALL EMERGENCY BATTERY LIGHT
	CEILING EMERGENCY BATTERY LIGHT
	EXTERIOR POLE LIGHT (ONE HEAD)
	EXTERIOR POLE LIGHT (TWO HEADS)
	EXTERIOR POLE LIGHT (THREE HEADS)
	EXTERIOR POLE LIGHT (FOUR HEADS)
	EXTERIOR POLE LIGHT (TOP MOUNT)
	EXTERIOR BOLLARD

ELECTRICAL SWITCHES

SYMBOL	DESCRIPTION
$	TOGGLE SWITCH - 20 AMP, 120/277VAC
$3	TOGGLE SWITCH - 3 WAY
$4	TOGGLE SWITCH - 4 WAY
$K	TOGGLE SWITCH - KEY OPERATED
$T	TOGGLE SWITCH - HORSE POWER RATED MANUAL MOTOR STARTER WITH THERMAL OVERLOAD PROTECTION
$P	TOGGLE SWITCH - PILOT LIGHT
D	DIMMER SWITCH - 20 AMP, 120/277VAC
D3	DIMMER SWITCH - 3 WAY
D4	DIMMER SWITCH - 4 WAY
OC1	WALL OCCUPANCY SENSOR - 1 BUTTON CONTROL
OC2	WALL OCCUPANCY SENSOR - 2 BUTTON CONTROL
OC3	WALL OCCUPANCY SENSOR - DUAL RELAY FOR EXHAUST FAN CONTROL
OC	CEILING OCCUPANCY SENSOR
VS1	WALL VACANCY SENSOR - 1 BUTTON CONTROL
VS2	WALL VACANCY SENSOR - 2 BUTTON CONTROL
LC	LOW VOLTAGE LIGHTING CONTROLLER
T	0 - 3 HOUR TIMER SWITCH - 20 AMP, 120/277VAC
PC	PHOTO CELL

ELECTRICAL EQUIPMENT

SYMBOL	DESCRIPTION
	PAD MOUNTED TRANSFORMER
	SUSPENDED TRANSFORMER
	DISTRIBUTION PANELBOARD
	BRANCH PANELBOARD - RECESSED MOUNT
	BRANCH PANELBOARD - SURFACE MOUNT
	DISCONNECT SWITCH - NON-FUSED
	DISCONNECT SWITCH - FUSED
	MOTOR CONTROLLER
	COMBINATION MOTOR CONTROLLER / DISCONNECT
	TELECOM TERMINAL BOARD
	GROUND BAR
	JUNCTION OR PULL BOX
	PUSHBUTTON OR PUSH PLATE
T	ELECTRIC THERMOSTAT
X	MOTOR ("X" DENOTES HORSEPOWER)
	MOLDED CASE CIRCUIT BREAKER
	GROUND CONNECTION
	GROUND POINT
	GROUND ROD
	GENERATOR
	AUTOMATIC TRANSFER SWITCH

ELECTRICAL RECEPTACLES

SYMBOL	DESCRIPTION
	DUPLEX RECEPTACLE - NORMAL POWER CIRCUIT
	DUPLEX RECEPTACLE - EMERGENCY POWER CIRCUIT
	DUPLEX GFCI RECEPTACLE - NORMAL POWER CIRCUIT
	DUPLEX GFCI RECEPTACLE - EMERGENCY POWER CIRCUIT
	QUADRAPLEX RECEPTACLE - NORMAL POWER CIRCUIT
	QUADRAPLEX RECEPTACLE - EMERGENCY POWER CIRCUIT
	QUADRAPLEX GFCI RECEPTACLE - NORMAL POWER CIRCUIT
	QUADRAPLEX GFCI RECEPTACLE - EMERGENCY POWER CIRCUIT
	SIMPLEX RECEPTACLE - NORMAL POWER CIRCUIT
	SIMPLEX RECEPTACLE - EMERGENCY POWER CIRCUIT
	SPECIAL RECEPTACLE - NORMAL POWER CIRCUIT
	SPECIAL RECEPTACLE - EMERGENCY POWER CIRCUIT
	DUPLEX RECEPTACLE - TOP SWITCHED

RECEPTACLE LEGEND

	RECEPTACLE ABOVE COUNTERTOP AT +2" ABOVE BACKSPLASH TO BOTTOM OF DEVICE. COORDINATE WITH CASEWORK TO BE INSTALLED.
	RECEPTACLE INSTALLED BELOW COUNTERTOP AT +18" A.F.F. COORDINATE WITH CASEWORK TO BE INSTALLED.
X	"X" DENOTES AS FOLLOWS: NONE - 20 AMP, 125VAC HM - 20 AMP, 125VAC, HORIZONTAL MOUNT TYPE IG - 20 AMP, 125VAC, ISOLATED GROUND TYPE S - 20 AMP, 125VAC, SURGE GUARD PROTECTION TYPE ST - 20 AMP, 125VAC, SAFETY TYPE WP - 20 AMP, 125VAC, WEATHERPROOF TYPE
	CEILING DUPLEX RECEPTACLE - NORMAL POWER CIRCUIT
	CEILING DUPLEX RECEPTACLE - EMERGENCY POWER CIRCUIT
	CEILING QUADRAPLEX RECEPTACLE - NORMAL POWER CIRCUIT
	CEILING QUADRAPLEX RECEPTACLE - EMERGENCY POWER CIRCUIT
	FLOOR BOX DUPLEX RECEPTACLE - NORMAL POWER CIRCUIT
	FLOOR BOX DUPLEX RECEPTACLE - EMERGENCY POWER CIRCUIT
	FLOOR BOX QUADRAPLEX RECEPTACLE - NORMAL POWER CIRCUIT
	FLOOR BOX QUADRAPLEX RECEPTACLE - EMERGENCY POWER CIRCUIT
	FLOOR BOX BLANK
	FLOOR BOX POWER AND TELECOM
	MULTI-OUTLET ASSEMBLY (POWER AND/OR TELECOM)

INFORMATION SYSTEMS

SYMBOL	DESCRIPTION
X	VOICE AND DATA ONLY OUTLET "X" DENOTES AS FOLLOWS: # - QUANTITY OF JACK(S) AND CABLE(S) R - ROUGH-IN ONLY
X	CEILING - VOICE AND DATA
WAP	WAP - WIRELESS ACCESS POINT
X	FLOOR BOX - VOICE AND DATA
	TELECOMMUNICATIONS EQUIPMENT RACK
TV	TV SYSTEM OUTLET
AV	AUDIO/VISUAL CONTROLLER
C	CLOCK SYSTEM OUTLET
M	MICROPHONE INPUT RECEPTACLE - WALL MOUNTED
M	MICROPHONE INPUT RECEPTACLE - CEILING MOUNTED
S	SPEAKER - CEILING MOUNTED
S	SPEAKER - WALL MOUNTED
V	VOLUME CONTROL

DOOR SECURITY SYSTEM

SYMBOL	DESCRIPTION
CCTV	CCTV COAXIAL CABLE OUTLET AND POWER OUTLET
MTV	CCTV MONITOR OUTLET
	DOOR BUZZER
DR	ELECTRIC DOOR OPENER
ES	ELECTRIC DOOR STRIKE
IC	INTERCOM UNIT FLUSH MTD.
MI	MASTER INTERCOM AND DIRECTORY UNIT
DS	SECURITY DUTY STATION
SS	SECURITY STAFF STATION
ML	SECURITY DOOR ALARM MAGNETIC LOCK
CR	SECURITY CARD READER
MD	MOTION DETECTOR
DC	SECURITY DOOR CONTACTS
PB	SECURITY EXIT PUSH BUTTON
SM	SECURITY MONITOR
DE	SECURITY DOOR EGRESS
K	SECURITY KEYPAD
BS	BIOSCAN ACCESS PAD
	CAMERA
SCP	SECURITY CONTROL PANEL

FIRE ALARM SYSTEM

SYMBOL	DESCRIPTION
M	MANUAL SENDING STATION
SD	WALL SMOKE DETECTOR
SD	WALL SMOKE DETECTOR WITH SOUNDER BASE
SD	CEILING SMOKE DETECTOR
SD	CEILING SMOKE DETECTOR WITH SOUNDER BASE
DD X	AUTOMATIC DUCT DETECTOR ("X" DENOTES AS FOLLOWS) NONE - PHOTOELECTRIC TYPE S - SUPPLY R - RETURN
RT	REMOTE DETECTOR TEST STATION
RI	REMOTE DETECTOR INDICATOR STATION
HD	HEAT DETECTOR
FD	FLAME DETECTOR
BD	BEAM DETECTOR
H	WALL HORN ONLY
H	WALL HORN STROBE
H	CEILING HORN ONLY
H	CEILING HORN STROBE
S	WALL SPEAKER ONLY
S	WALL SPEAKER STROBE
S	CEILING SPEAKER STROBE
V	WALL VISUAL ONLY
V	CEILING VISUAL ONLY
AR	FIRE ALARM ADDRESSABLE RELAY
J	FIREMANS JACK
DU	DOOR UNLOCK
DR	DOOR RELEASE
FS	SPRINKLER SYSTEM FLOW SWITCH
TS	SPRINKLER SYSTEM TAMPER SWITCH
PIV	POST INDICATOR VALVE
FACP	FIRE ALARM CONTROL PANEL
FAAP	FIRE ALARM ANNUNCIATOR PANEL
NAC	FIRE ALARM NOTIFICATION APPLIANCE CONTROL PANEL

NURSE CALL SYSTEM

SYMBOL	DESCRIPTION
M	MASTER STATION
D	DUTY STATION
S	STAFF STATION
E	EMERGENCY/BATH STATION
PC	PULL CORD
PC A	PULL CORD WITH ALARM
P	PATIENT STATION - SINGLE OUTLET
P E	PATIENT STATION - SINGLE OUTLET WITH CODE / STAFF ASSIST BUTTON
CB	CODE BLUE STATION
CP	CODE PINK STATION
L	STAFF LOCATOR STATION
WL	WALL MOUNTED DOME LIGHT
CL	CEILING MOUNTED DOME LIGHT
Z	ZONE LIGHT
W	NURSE STATION INPUT JACK
R	ROOM READY INDICATOR
A	REMOTE ANNUNCIATOR
N	NURSE ASSIST
NC	NURSE ASSIST/CODE BLUE
X	NURSE AUXILIARY JACK
2X	DOUBLE NURSE AUXILIARY JACK
IC	BED CONTROL CABLE/INTERCONNECT JACK
	TELEMETRY ANTENNA LOCATION
IR	TRACKING SENSOR (IR)
RF	TRACKING SENSOR (RF)

ELECTRICAL ABBREVIATIONS

ABBREVIATION	DESCRIPTION	ABBREVIATION	DESCRIPTION
A or AMP	AMPERE	HZ	HERTZ
AC	ALTERNATING CURRENT	IC	INTERCOMMUNICATION
A/C	AIR CONDITIONING	ID	INSIDE DIAMETER
ACP	ACCESS PANEL	INCAN	INCANDESCENT
ACU	AIR CONDITIONING UNIT	INCL	INCLUDE
ADD	ADDITION	ISG	ISOLATED GROUND SURGE GUARD
ADJ	ADJUSTABLE	JB	JUNCTION BOX
AF	AMPERE FRAME	JT	JOINT
AFC	ABOVE FINISHED CEILING	KEC	KITCHEN EQUIPMENT CONTRACTOR
AFF	ABOVE FINISHED FLOOR	KT	KITCHENETTE
AFG	ABOVE FINISHED GRADE	KVA	KILOVOLT AMPERE
AHU	AIR HANDLING UNIT	KVAR	KILOVOLT AMPERE REACTIVE
AIC	AMPERE INTERRUPTING CAPACITY	KW	KILOWATT
AL	ALUMINUM	LAB	LABORATORY
AM	AMMETER	LB	POUND
AMB	AMBIENT	LF	LINEAR FEET
APPROX.	APPROXIMATELY	LOC	LOCATION
ARCH	ARCHITECT	LS	LIFE SAFETY
ATS	AUTOMATIC TRANSFER SWITCH	LT	LIGHT
AUTO	AUTOMATIC	LTG	LIGHTING
AVG	AVERGE	LV	LOW VOLTAGE
BC	BARE COPPER	MATV	MASTER ANTENNA TELEVISION
BKR	BREAKER	MAX	MAXIMUM
BHP	BRAKE HORSEPOWER	MC	MECHANICAL CONTRACTOR
BL	BUILDING LINE	MCB	MAIN CIRCUIT BREAKER
BLDG	BUILDING	MCC	MOTOR CONTROL CENTER
BR	BRANCH	MDP	MAIN DISTRIBUTION PANEL
BTM	BOTTOM	MECH	MECHANICAL
C	CONDUIT	MH	MANHOLE
°C	DEGREES CELSIUS	MIN	MINIMUM
CAB	CABINET	MISC	MISCELLANEOUS
CB or C/B	CIRCUIT BREAKER	MLO	MAIN LUGS ONLY
C/C	CENTER TO CENTER	MTD	MOUNTED
CCTV	CLOSED CIRCUIT TELEVISION	MTG HT	MOUNTING HEIGHT
CKT	CIRCUIT	MU	MEDICINE UNIT
CL	CENTER LINE	OD	OUTSIDE DIAMETER
CLG	CEILING	OFCI	OWNER FURNISHED-CONTRACTOR INSTALLED
COL	COLUMN	OFOI	OWNER FURNISHED-OWNER INSTALLED
COMM	COMMUNICATION	OPNG	OPENING
COMP	COMPRESSOR	OPP	OPPOSITE
CONC	CONCRETE	OR	OPERATING ROOM
CONST	CONSTRUCTION	P	POLE
CONT	CONTINUOUS	PB	PUSHBUTTON
CONTR	CONTRACTOR	PBOX	PULL BOX
CR	CRITICAL	PE	PNEUMATIC ELECTRIC CONVERTER
CT	CURRENT TRANSFORMER	PF	POWER FACTOR
CU	COPPER	PH or Ø	PHASE
DB	DIRECT BURIAL	PIV	POST INDICATOR VALVE
DC	DIRECT CURRENT	PNL	PANELBOARD
DEPT	DEPARTMENT	PL	PILOT LIGHT
DF	DRINKING FOUNTAIN	PREFAB	PREFABRICATED
DIST	DISTRIBUTION	PRES	PRESSURE
DM	DEMAND METER	PT	PNEUMATIC TUBE
DO	DRAWOUT	PTS	PNEUMATIC TUBE STATION
DRS	DOCTORS	PW	PART WINDING
DWG	DRAWING	PWR	POWER
EC	ELECTRICAL CONTRACTOR	RACU	ROOM AIR CONDITIONING UNIT
EF	EXHAUST FAN	RAD	RADIATION
ELEC	ELECTRIC	RECEPT	RECEPTACLE
ELEV	ELEVATOR	REF or REFR	REFRIGERATOR
ELV	ELEVATION	REINF	REINFORCED
EMER	EMERGENCY	RGIP	REMOTE GROUND INDICATING PANEL
ENCL	ENCLOSURE	RM	ROOM
EP	ELECTRIC PNEUMATIC	RPM	REVOLUTIONS PER MINUTE
EQUIP	EQUIPMENT	SA	SUPPLY AIR
EWC	ELECTRIC WATER COOLER	SC	SHORT CIRCUIT
EX	EXPLOSIONPROOF	SG	SURGE GUARD PROTECTION
EXH	EXHAUST	SHT	SHEET
EXP	EXPANSION	SIG	SIGNAL
EXT	EXTERIOR	SN	SOLID NEUTRAL
°F	DEGREES FAHRENHEIT	SPEC	SPECIFICATIONS
FA	FIRE ALARM	SQ	SQUARE
FAAP	FIRE ALARM ANNUNCIATOR PANEL	SS	SAFETY SWITCH
FACP	FIRE ALARM CONTROL PANEL	SSSS	SOLID STATE SOFT START
FC	FLAT CABLE	STD	STANDARD
FCU	FAN COIL UNIT	STN	STATION
FFC	FOOD FACILITY CONTRACTOR	STR	STRUCTURAL
FFS	FOOD FACILITY SUPPLIER	SUSP	SUSPENDED
FHC	FIRE HOSE CABINET	SW	SWITCH
FIN	FINISH	SWBD	SWITCHBOARD
FIXT	FIXTURE	SWGR	SWITCHGEAR
FL	FLOOR	TCC	TEMPERATURE CONTROL CONTRACTOR
FLUOR	FLUORESCENT	TELE	TELECOMMUNICATION
FLEX-CONN	FLEXIBLE CONNECTION	TEMP	TEMPERATURE
FPC	FIRE PROTECTION CONTRACTOR	TMH	TOP OF MANHOLE
FSS	FUSED SAFETY SWITCH	TV	TELEVISION
FTG	FOOTING	TYP	TYPICAL
FVR	FILMVIEWER	UC	UNDER CARPET
FV	FULL VOLTAGE	U/C	UNDER CABINET or UNDER COUNTER
FVNR	FULL VOLTAGE NON REVERSING	UH	UNIT HEATER
G or GND	GROUND	UV	UNIT VENTILATOR
GALV	GALVANIZED	V	VOLT
GC	GENERAL CONTRACTOR	VAC	VACUUM
GEN	GENERATOR	VB	VACUUM BREAKER
GFCI	GROUND FAULT CKT. INTERRUPTER	VC	VACUUM CLEANING
GFI	GROUND FAULT INTERRUPTER	VEL	VELOCITY
GFP	GROUND FAULT PROTECTION	VFD	VARIABLE FREQUENCY DRIVE
HGT	HEIGHT	VM	VOLTMETER
HH	HANDHOLE	VOL	VOLUME
HID	HIGH INTENSITY DISCHARGE	VP	VAPORPROOF
HO	HAND OPERATED	VSD/VFC	VARIABLE SPEED DRIVE/CONTROLLER
HOA	HAND-OFF-AUTOMATIC	W/	WITH
HORZ	HORIZONTAL	W/O	WITHOUT
HP	HORSEPOWER	WTR	WATER
HPS	HIGH PRESSURE SODIUM	WP	WEATHERPROOF
HTR	HEATER	WT	WEIGHT
HV	HIGH VOLTAGE	XFMR	TRANSFORMER
		Z	IMPEDANCE

RACEWAY SYSTEM

SYMBOL	DESCRIPTION
	FEEDER SIZE. (REFER TO FEEDER SCHEDULE FOR ADDITIONAL INFORMATION
	PHASE CONDUCTORS
	NEUTRAL
	GROUND

FXX

LINE SYMBOLS

	LIGHT/SCREENED SOLID OR DASHED LINES INDICATE EXISTING TO REMAIN
	HEAVY DASHED LINES INDICATE EXISTING TO BE REMOVED
	HEAVY CONTINUOUS LINES INDICATE NEW WORK

ALL SYMBOLS AND ABBREVIATIONS MAY NOT BE USED ON THIS PROJECT

GENESIS engineering group
91 South Main Street
Suite 200
Zionsville, IN 46077
Phone: 1.317.927.8307
www.genesis-engineering.com

DAVID SHUCK REGISTERED No. 19700101 STATE OF INDIANA PROFESSIONAL ENGINEER

Certified By:

Revisions

Number	Date	Description

Drawn By: JAW
Checked By: JAW
Project Status: DESIGN DEVELOPMENT
Date: 17 JAN 2018

Title: ELECTRICAL SYMBOLS AND NOTES

Project: BRIDGE NO. 207 - LOGAN STREET OVER WHITE RIVER

HAMILTON COUNTY

This drawing and its contents are then property of Genesis Engineering Group, and shall not be reproduced in whole or in part by any means, mechanical or electronic, without express written permission of Genesis Engineering Group. Copyright 2013, by Genesis Engineering Group, inc.

Drawing Number:

E001

C:\Users\jwalke\Documents\ESL - Logan Street Bridge_jwalke@genesis-engineering.com.rvt
4/18/2018 2:27:49 PM

PLAN NOTES

1 DISCONNECT AND REMOVE EXISTING LIGHT POLE COMPLETE BACK TO SOURCE OR NEAREST HANDHOLE / JUNCTION BOX TO REMAIN.

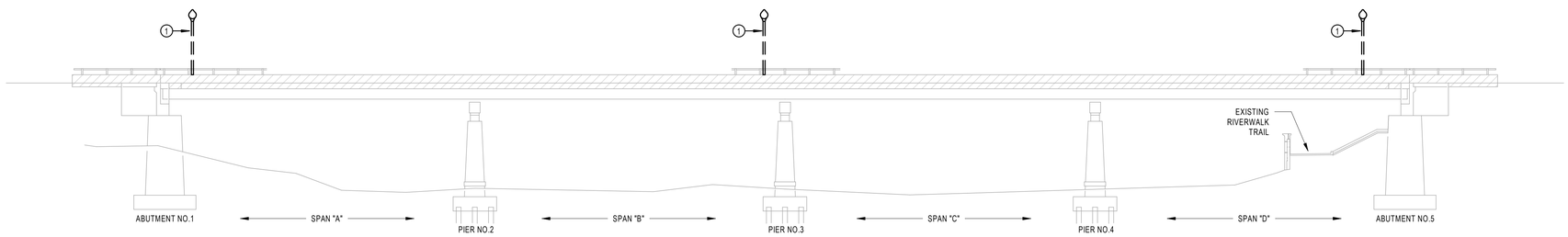

ELEVATION

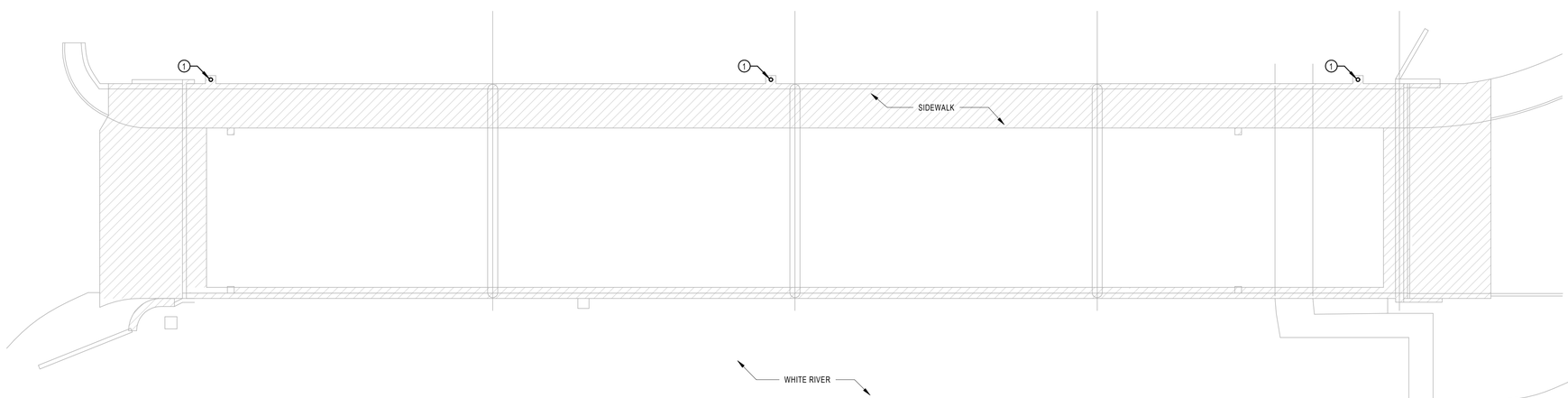

PLAN

1 Bridge Lighting Demolition Plan
1/16" = 1'-0"

GENESIS engineering group
91 South Main Street
Suite 200
Zionsville, IN 46077
Phone: 1.317.927.8307
www.genesis-engineering.com

Certified By:

DAVID SHUCK REGISTERED No. 19700101 STATE OF INDIANA PROFESSIONAL ENGINEER

Revisions

Number	Date	Description

Drawn By: JAW
Checked By: JAW
Project Status: DESIGN DEVELOPMENT
Date: 17 JAN 2018

Title: BRIDGE LIGHTING DEMOLITION PLAN

Project: **BRIDGE NO. 207 - LOGAN STREET OVER WHITE RIVER**

HAMILTON COUNTY

This drawing and its contents are then property of Genesis Engineering Group, and shall not be reproduced in whole or in part by any means, mechanical or electronic, without express written permission of Genesis Engineering Group. Copyright 2013, by Genesis Engineering Group, inc.

Drawing Number:

E100

C:\Users\jwalke\Documents\ESL - Logan Street Bridge_jwalke@genesis-engineering.com.rvt
4/18/2018 2:27:43 PM

VOLTAGE DROP

(APPLY TO ALL ELECTRICAL SHEETS)
1. VOLTAGE DROP IS NOT SHOWN ON THE DRAWINGS. THE ELECTRICAL CONTRACTOR SHALL BE RESPONSIBLE FOR ADJUSTING ALL FEEDER AND BRANCH CIRCUIT CONDUCTOR SIZES TO COMPLY THE NATIONAL ELECTRICAL CODE AND ALL STATE AND LOCAL CODES VOLTAGE DROP REQUIREMENTS.
2. THE ELECTRICAL CONTRACTOR SHALL UPSIZE FEEDER AND BRANCH CIRCUIT CONDUCTORS AS REQUIRED BASED ON ACTUAL INSTALLED CONDUCTOR LENGHTS.
3. VOLTAGE DROP ON FEEDERS SHALL NOT EXCEED 2 PERCENT.
4. VOLTAGE DROP ON BRANCH CIRCUITS SHALL NOT EXCEED 3 PERCENT.

PLAN NOTES

1. PROVIDE A DUKE ENERGY APPROVED NEMA 3R, 120 / 240V, 1P-3W, 200A METER BASE WITH INTEGRAL 12 POLE PANEL IN RIGHT-OF-WAY. ELECTRICAL CONTRACTOR TO PROVIDE CONDUIT FROM POLE TO METER BASE AND CONDUIT AND CONDUCTORS FROM METER BASE TO FIXTURES. ELECTRICAL CONTRACTOR SHALL COORDINATE LOCATION AND ALL ASPECTS OF METER INSTALLATION WITH UTILITY. UTILITY'S REQUIREMENTS SHALL TAKE PRECEDENCE. PROVIDE SUPPORT STRUCTURE WITH CONCRETE BASES AS REQUIRED.
2. CONNECT NEW LIGHTED HANDRAIL COMPLETE TO 120V, 20A, 1P CIRCUIT FROM NEW PANEL. PROVIDE CONDUIT / WIRING / HANDHOLES / JUNCTION BOXES AS REQUIRED. PROVIDE DMX CABLING TO IN SEPARATE CONDUIT. MOUNT ALL ASSOCIATED CONTROLLERS / DRIVERS / POWER SUPPLIES INSIDE BENCH ENCLOSURES. ENSURE ENCLOSURES AND WIRING / CONDUIT ARE HIDDEN FROM PUBLIC VIEW.
3. CONNECT NEW LIGHT POLE COMPLETE TO 120V, 20A, 1P CIRCUIT FROM NEW PANEL. PROVIDE CONDUIT / WIRING / HANDHOLES / JUNCTION BOXES AS REQUIRED. PROVIDE DMX CABLING TO IN SEPARATE CONDUIT. PROVIDE POLE BASE AS REQUIRED. REFER TO POLE BASE DETAIL ON SHEET E400 FOR ADDITIONAL INFORMATION.
4. CONNECT NEW LIGHT POLE COMPLETE TO 120V, 20A, 1P CIRCUIT FROM NEW PANEL. PROVIDE CONDUIT / WIRING / HANDHOLES / JUNCTION BOXES AS REQUIRED. PROVIDE DMX CABLING TO IN SEPARATE CONDUIT. GROUND FIXTURE AND POLE SIMILAR TO EXISTING FIXTURES. MOUNT POLE TO BRIDGE PROJECTION PROVIDED BY OTHERS.
5. RAILING UPRIGHT ENCLOSURE TO HOUSE SOUTH OVERLOOK HANDRAIL DRIVERS / POWER SUPPLIES. PROVIDE CONDUIT, CONDUCTORS AND CONTROL WIRING AS REQUIRED.
6. RAILING UPRIGHT ENCLOSURE TO HOUSE NORTH STREET SIDE HANDRAIL DRIVERS / POWER SUPPLIES. PROVIDE CONDUIT, CONDUCTORS AND CONTROL WIRING AS REQUIRED.
7. PROVIDE LIGHTING CONTACTOR, PER ESL SPECTRUM, IN A NEMA 3R ENCLOSURE. MOUNT ON METER / PANEL SUPPORT STRUCTURE AS REQUIRED.
8. ELECTRICAL CONTRACTOR SHALL FAMILIRIZE THEMSELVES WITH ALL FIXTURES, EQUIPMENT, DEVICES, MOUNTING, CONTROL, ETC AND PROVIDE A COMPLETE SYSTEM. CONTRACTOR SHALL COORDINATE ALL ASPECTS OF INSTALLATION WITH ESL SPECTRUM PRIOR TO BID.
9. CONNECT BRIDGE FLOOD LIGHTS TO CIRCUIT INDICATED ON PLAN. REFER TO SHEET E300 FOR ADDITIONAL INFORMATION.
10. CONNECT BRIDGE HANDRAIL LIGHTS TO CIRCUIT INDICATED ON PLAN. REFER TO SHEET E300 AND E400 FOR ADDITIONAL INFORMATION.
11. CONNECT BRIDGE POST TOP LIGHTS TO CIRCUIT INDICATED ON PLAN. REFER TO SHEET E300 AND E400 FOR ADDITIONAL INFORMATION.

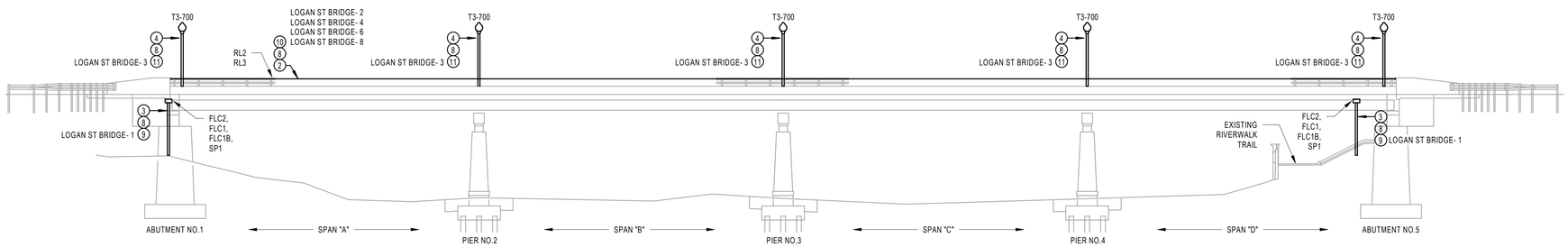

ELEVATION

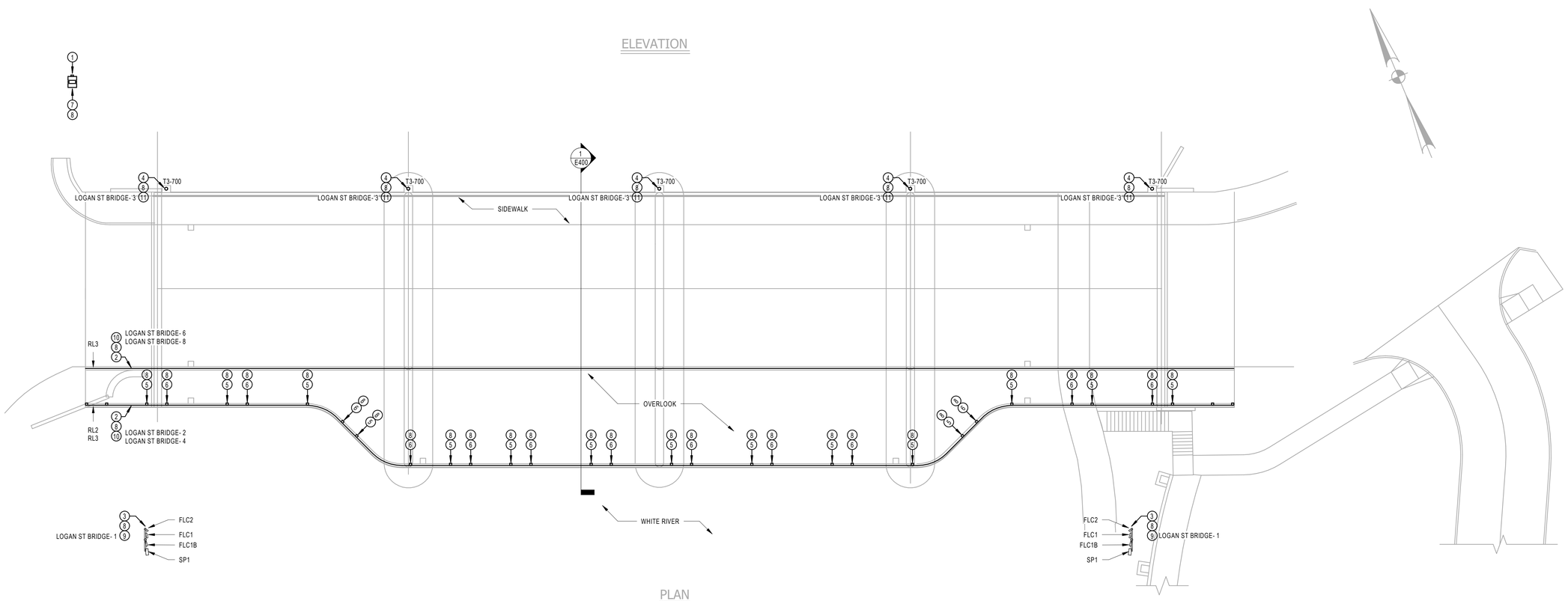

PLAN

1 Bridge Lighting Plan
1/16" = 1'-0"

UTILITY CONTACT

DUKE ENERGY
YARTO M BLEAH
YARTO.BLEAH@DUKE-ENERGY.COM
317.385.8175
WORK ORDER #278-67208

GENESIS engineering group
91 South Main Street
Suite 200
Zionsville, IN 46077
Phone: 1.317.927.8307
www.genesis-engineering.com

Certified By: DAVID SHUCK REGISTERED No. 19700101 STATE OF INDIANA PROFESSIONAL ENGINEER

Revisions

Number	Date	Description

Drawn By: JAW
Checked By: JAW
Project Status: DESIGN DEVELOPMENT
Date: 17 JAN 2018

Title: BRIDGE LIGHTING PLAN
Project: **BRIDGE NO. 207 - LOGAN STREET OVER WHITE RIVER**
HAMILTON COUNTY

This drawing and its contents are then property of Genesis Engineering Group, and shall not be reproduced in whole or in part by any means, mechanical or electronic, without express written permission of Genesis Engineering Group. Copyright 2013, by Genesis Engineering Group, inc.

Drawing Number:
E200

C:\Users\jwalke\Documents\ESL - Logan Street Bridge_jwalke@genesis-engineering.com.rvt
4/18/2018 2:27:57 PM

LIGHT FIXTURE SCHEDULE

FIXTURE DESIGNATION	DESCRIPTION	VOLTAGE	WATTAGE	LAMP	LUMENS	MANUFACTURER - MODEL NUMBER	COUNT	TOTAL WATTAGE
FLC1	RGBW SPOT LIGHT	120 V	133 W	LED	7200	WE-EF - 667-6127 667-8125 667-9264-667-9332	2	266 W
FLC1B	RGBW SPOT LIGHT	120 V	133 W	LED	7200	WE-EF - 667-6127 667-9332	2	266 W
FLC2	RGBW SPOT LIGHT	120 V	90 W	LED	4800	WE-EF - 667-4127 667-8122 667-9244 667-9332	2	180 W
RL2	RGBW HAND RAIL 2'	120 V	20 W	LED	966	INTENSE LIGHTING - IVR2-RPS-ST-W-RGBW-30AS	16	320 W
RL3	RGBW HAND RAIL 3'	120 V	30 W	LED	1449	INTENSE LIGHTING - IVR2-RPS-ST-W-RGBW-30AS	161	4830 W
SP1	RGBW FACADE & FLOOD LIGHT	120 V	200 W	LED		INSIGHT - 17SP-200-RGBW-5-TR-INT-TW-VS-TA2	2	400 W
T3-700	RIVER WALK POST TOP FIXTURE	120 V	132 W	LED	9486	ARCHITECTURAL AREA LIGHTING - UCL-WND-FLR-T3-56LED-4K-700-WH-FTG-PM	5	660 W
							TOTAL WATTAGE	6922 W

Branch Panel: LOGAN ST BRIDGE

Location: Highway 19 Right-Of-Way
Supplied From: Utility
Mounting: Recessed
Enclosure Type: NEMA 3R

Voltage: 120/240 Single
Phase: 1
Wire: 3
Ground: Yes

Branch: Normal
A.I.C. Rating: 22,000
Main Type: MCB
Main Rating: 100A

General Panel Comments:
Contractor shall coordinate A.I.C. Rating with Duke Energy.

Circuit Number	Circuit Description	Trip	Poles	A		B		Poles	Trip	Circuit Description	Circuit Number
1	BRIDGE SPOT LIGHTS	20 A	1	1.1	1.3			1	20 A	BRIDGE SOUTHEAST HANDRAIL LIGHTING	2
3	BRIDGE POST TOP LIGHTS	20 A	1			0.7	1.3	1	20 A	BRIDGE SOUTHWEST HANDRAIL LIGHTING	4
5	SPARE	20 A	1	0	1.3			1	20 A	BRIDGE NORTHEAST HANDRAIL LIGHTING	6
7	SPARE	20 A	1			0	1.3	1	20 A	BRIDGE NORTHWEST HANDRAIL LIGHTING	8
9	SPARE	20 A	1	0	0			1	20 A	SPARE	10
11	SPARE	20 A	1			0	0	1	20 A	SPARE	12
			Total Load:	3.7 kVA		3.2 kVA					

Load Summary:

Load Classification	Connected Load	Demand Factor	Estimated Demand	Panel Totals	
Lighting	6922 VA	100.00%	6922 VA		
				Total Conn. Load:	6922 VA
				Total Est. Demand:	6922 VA
				Total Conn. Current:	29 A
				Total Est. Demand Current:	29 A

Remarks:

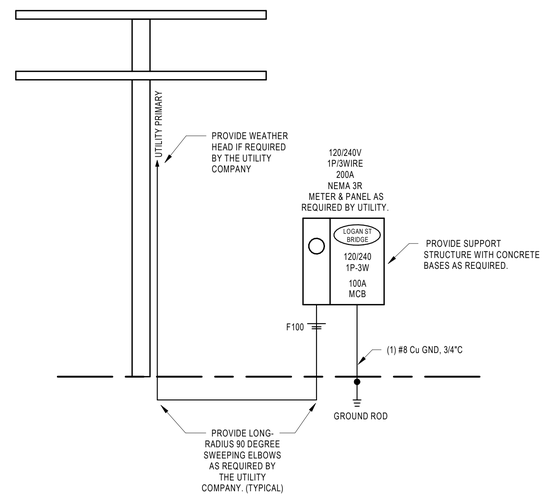

1 ELECTRICAL ONELINE RISER DIAGRAM
NO SCALE

FEEDER SIZING TABLE

DESIGNATION	CONDUCTOR SIZE PER CONDUIT		CONDUIT SIZE AND QUANTITY				
FXXX	PHASE & NEUTRAL	BUILDING GROUND	OR 1P, 1N, 1G 2P, 1G	OR 2P, 1N, 1G 3P, 1G	3P, 1N, 1G	3P, 3N, 1G	3P, 1N, 2G
F20	12	12	3/4"	3/4"	3/4"	3/4"	3/4"
F30	10	10	3/4"	3/4"	3/4"	3/4"	3/4"
F40-F50	8	10	3/4"	3/4"	3/4"	1"	3/4"
F60	6	10	3/4"	3/4"	1"	1"	1"
F70-F80	4	8	3/4"	1"	1-1/4"	1-1/4"	1-1/4"
F90-F100	3	8	1"	1"	1-1/4"	1-1/2"	1-1/4"
F110	2	6	1"	1-1/4"	1-1/4"	1-1/2"	1-1/4"
F125	1	6	1-1/4"	1-1/4"	1-1/2"	2"	1-1/2"
F150	1/0	6	1-1/4"	1-1/2"	1-1/2"	2"	2"
F175	2/0	6	1-1/4"	1-1/2"	2"	2-1/2"	2"
F200	3/0	6	1-1/4"	2"	2"	2-1/2"	2"

NOTES:
1. 20 A BRANCH CIRCUITS SHALL BE SIZED FOR VOLTAGE DROP. WIRE SIZES ARE NOT INDICATED ON THE DRAWINGS TO COMPENSATE FOR VOLTAGE DROP. FOR THESE CIRCUITS, CONTRACTOR SHALL UTILIZE WIRE SIZE SHOWNABOVE FOR DISTANCES LISTED ABOVE.
2. VOLTAGE DROP WIRE SIZES WILL BE STRICTLY INFORCED. CONTRACTOR SHALL SUBMIT A LIST OF CIRCUITS THAT WILL EXCEED THE DISTANCES ALLOWED AND INDICATE WIRE SIZE TO BE USED PRIOR TO ANY WIRE BEING INSTALLED.
3. DO NOT SHARE NEUTRAL CONDUCTORS FOR ANY BRANCH CIRCUITS. ALL BRANCH CIRCUIT SHALL HAVE SEPARATE, INDEPENDENT NEUTRAL CONDUCTORS.
4. ALL BRANCH CIRCUIT WIRING THAT WILL BE EXPOSED SHALL BE IN RIGID CONDUIT AND ALL BRANCH CIRCUIT WIRING UNDERGROUND SHALL BE IN PVC.
5. ALL CONDUIT PENETRATIONS THRU THE SLAB SHALL BE MADE WITH CAUTION. CONTRACTOR SHALL COORDINATE ALL HOLE LOCATIONS WITH STRUCTURAL ENGINEER PRIOR TO CUTTING ANY NEW HOLES. NEW HOLES SHALL BE ADJUSTED AS REQUIRED TO MISS REBAR AS DETERMINED BY THE STRUCTURAL ENGINEER.

GENESIS engineering group
91 South Main Street
Suite 200
Zionsville, IN 46077
Phone: 1.317.927.8307
www.genesis-engineering.com

DAVID SHUCK REGISTERED No. 19700101 STATE OF INDIANA PROFESSIONAL ENGINEER

Certified By:

Revisions

Number	Date	Description

Drawn By: JAW
Checked By: JAW
Project Status: DESIGN DEVELOPMENT
Date: 17 JAN 2018

Title: ELECTRICAL SCHEDULES

Project: **BRIDGE NO. 207 - LOGAN STREET OVER WHITE RIVER**
HAMILTON COUNTY

This drawing and its contents are then property of Genesis Engineering Group, and shall not be reproduced in whole or in part by any means, mechanical or electronic, without express written permission of Genesis Engineering Group. Copyright 2013, by Genesis Engineering Group, Inc.

Drawing Number:
E300

C:\Users\jwalke\Documents\ES3L - Logan Street Bridge_jwalke@genesis-engineering.com.rvt
4/18/2018 2:28:03 PM

INFORMATION PLATE

PANEL 1LN1 — LAMACOID PLATE
EQUIPMENT SERVED
120/208V 3P 4W. — VOLTAGE
FED FROM MDP — SOURCE OF POWER

NOTE: PROVIDE I.D. PLATE LABEL FOR ELECTRICAL EQUIPMENT SUCH AS MAIN SWITCHGEAR, SWITCHBOARD PANELBOARDS, AND TRANSFORMERS

1 ELECTRICAL EQUIPMENT I.D. LABELING DETAIL
NO SCALE

WARNING

Arc Flash Hazard
Appropriate PPE Required

Equipment Type	480V Switchgear
Grounding	Grounded
Work Distance	11 inches (300 mm)
Available 3-Ph Bolted Current	25 kA
Flash Protection Boundary	27 inches
Incident Energy at 11 inches	4.39 cal/cm2
Risk Category	2
Equipment Name:	Switchboard

NOTE: PROVIDE WARNING LABEL FOR ALL ELECTRICAL EQUIPMENT SUCH AS MAIN SWITCHGEAR, SWITCHBOARDS, PANELBOARDS, AND TRANSFORMERS.

2 ELECTRICAL EQUIPMENT WARNING LABEL DETAIL
NO SCALE

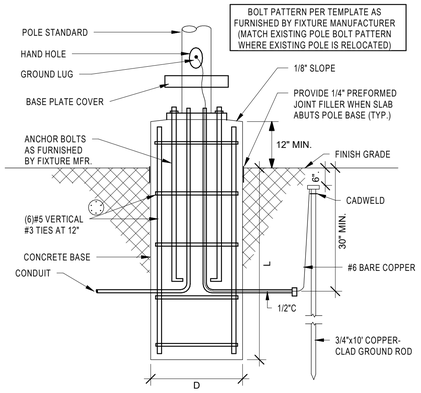

DIMENSIONS		
Pole Height	L	D
12'-0"	4'-6"	1'-6"
20'-0"	5'-0"	2'-0"
30'-0"	6'-0"	2'-6"
40'-0"	7'-0"	3'-0"

NOTES:

1. VERIFY ANCHOR BOLT LOCATIONS WITH MANUFACTURER'S TEMPLATE PRIOR TO BASE CONSTRUCTION

3 POLE BASE DETAIL - RAISED BASE
NO SCALE

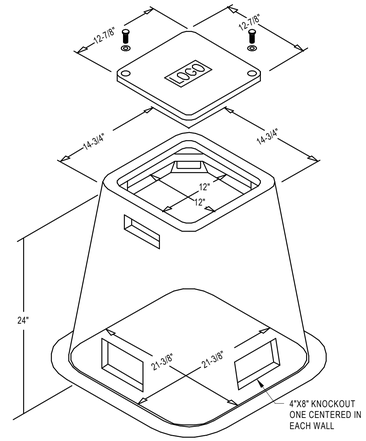

4 TYPICAL HANDHOLE DETAIL
NO SCALE

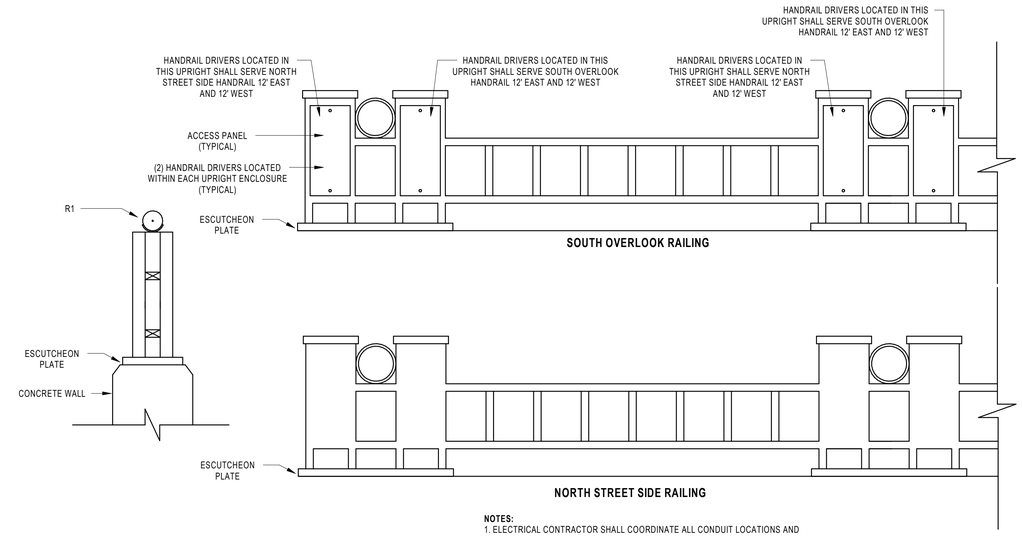

NOTES:
1. ELECTRICAL CONTRACTOR SHALL COORDINATE ALL CONDUIT LOCATIONS AND ROUTING WITH BRIDGE DESIGN ENGINEER PRIOR TO BRIDGE INSTALLATION.

6 TYPICAL HANDRAIL DETAIL
NO SCALE

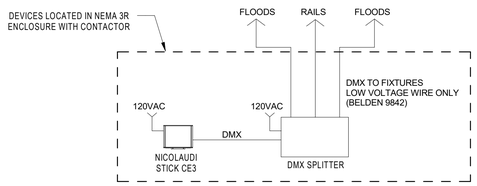

NOTES:
1. LINE VOLTAGE TO FIXTURES WILL BE RUN THROUGH AND CONTROLLED VIA CONTACTOR IN ENCLOSURE BELOW SERVICE PANEL
2. DMX WIRE TO BE DAISY CHAINED FROM FIXTURE TO FIXTURE.
3. FINAL FIXTURE IN RUN TO BE TERMINATED VIA TERMINATION RESISTOR TIED BETWEEN + AND - OF DMX CABLE.
4. PROVIDE PHOTOCELL FOR ON / OFF CONTROL.

5 DMX RISER DETAIL
NO SCALE

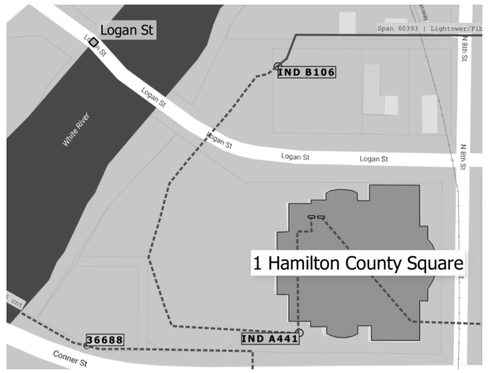

NOTES:
1. CONNECT LOGAN STREET BRIDGE LIGHTING CONTROLLERS TO SPLICE POINT 'IND B106'.
2. PROVIDE ALL WIRING, CONDUIT, JUNCTION BOXES, HANDHOLES, ETC. AS REQUIRED.
3. VERIFY ALL REQUIREMENTS WITH JOHN RUPPE WITH WITH CROWN CASTLE FIBER.
   a. 317.750.4039
   b. JOHN.RUPPE@CROWNCASTLE.COM

8 LOGAN ST. BRIDGE FIBER CONNECTION POINT
NO SCALE

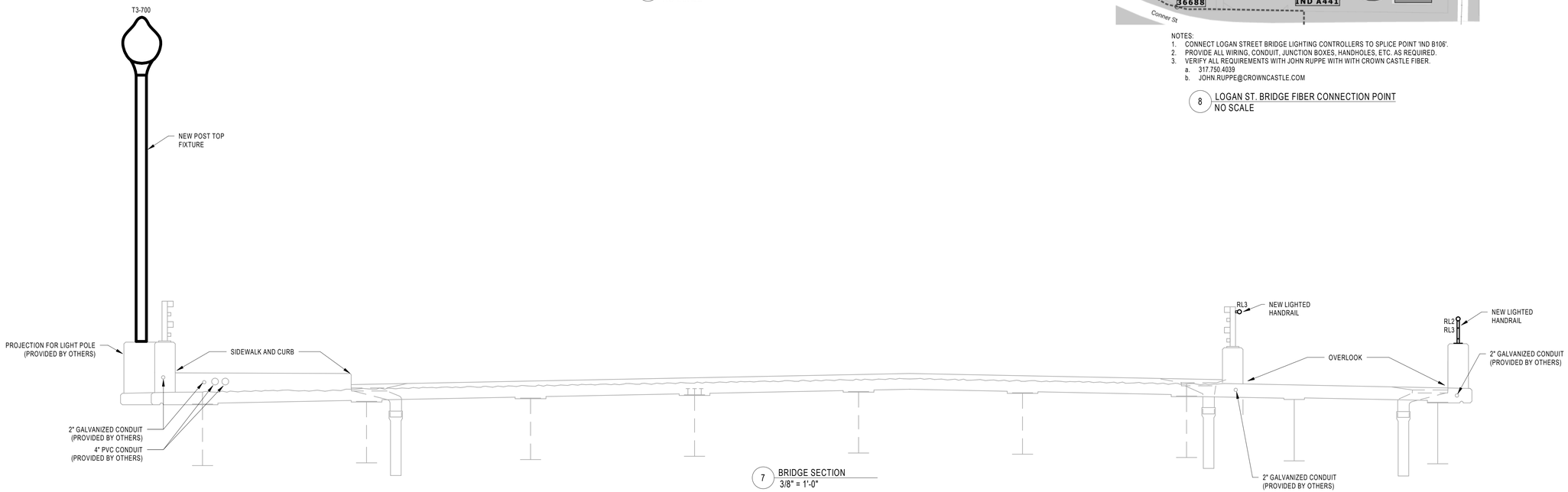

7 BRIDGE SECTION
3/8" = 1'-0"

GENESIS engineering group
91 South Main Street
Suite 200
Zionsville, IN 46077
Phone: 1.317.927.8307
www.genesis-engineering.com

Certified By:
DAVID SHUCK REGISTERED No. 19700101 STATE OF INDIANA PROFESSIONAL ENGINEER

Revisions

Number	Date	Description

Drawn By: Author
Checked By: Checker
Project Status: BP6 SD/DD/CD %=VELOPMENT
Date: 33 JAN 2015

Title: ELECTRICAL DETAILS

Project: **PROJECT DESCRIPTION BP6REET OVER WHITE RIVER**
HAMILTON COUNTY

This drawing and its contents are then property of Genesis Engineering Group, and shall not be reproduced in whole or in part by any means, mechanical or electronic, without express written permission of Genesis Engineering Group. Copyright 2013, by Genesis Engineering Group, inc.

Drawing Number:
E400

C:\Users\jwalke\Documents\ESL - Logan Street Bridge_jwalke@genesis-engineering.com.rvt
4/18/2018 2:28:10 PM