PROJECT	DESIGNATION NO.
1401701	0902302
CONTRACT	BRIDGE FILE
R-38073	HAMILTON 29

INDIANA DEPARTMENT OF TRANSPORTATION

STRUCTURE	TYPE	SPAN AND SKEW	OVER	STATION
HAMILTON NO. 29	PRESTRESSED CONCRETE BULB TEE BEAM BRIDGE	ONE SPAN @ 118'-0" SQUARE	LITTLE EAGLE CREEK	103+76 "PR-A"

HAMILTON COUNTY PROJECT NO. PB-19-0002

BRIDGE PLANS

FOR SPANS OVER 20 FEET ON 146TH STREET OVER OVER LITTLE EAGLE CREEK

PROJECT NO. 1401701 P.E.
1401701 CONST.
1401701 R/W

TRAFFIC DATA	146th St.
A.A.D.T. (2020)	8,813 V.P.D.
A.A.D.T. (2040)	14,972 V.P.D.
D.H.V. (2040)	1,871 V.P.H.
DIRECTIONAL DISTRIBUTION	50%
TRUCKS	6% D.H.V.
	12% A.A.D.T.

DESIGN DATA	146th St.
DESIGN SPEED	45 MPH
PROJECT DESIGN CRITERIA	4R (Non-Freeway)
FHWA FUNCTIONAL CLASSIFICATION	Major (Collector)
LOCAL FUNCTIONAL CLASSIFICATION	Principal Arterial
RURAL/URBAN	Urban (Suburban)
TERRAIN	Level
ACCESS CONTROL	Limited

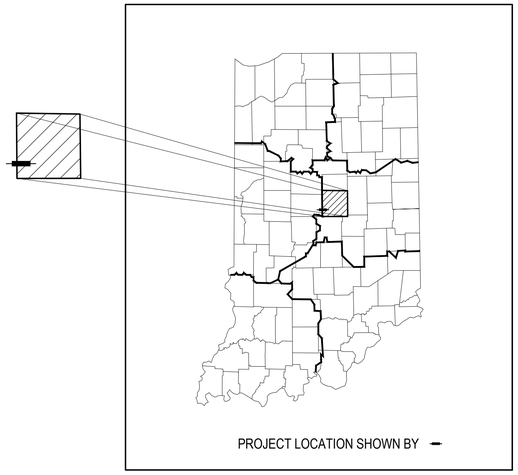

LATITUDE: 39°59'55.6" LONGITUDE: 86°14'23.0"

BRIDGE LENGTH = 0.023 mi.
MAX. GRADE = +2.00%

HUC: 05120201120070

APPROVED BY
HAMILTON COUNTY BOARD OF COMMISSIONERS

STEVE DILLINGER, PRESIDENT

CHRISTINE ALTMAN, VICE PRESIDENT

MARK HEIRBRANDT, MEMBER

ATTEST DATE

ROBIN MILLS, COUNTY AUDITOR

RECOMMENDED FOR APPROVAL

DATE

JIM NEAL, P.E. , COUNTY ENGINEER, ERC

BRIDGE REPLACEMENT OF HAMILTON COUNTY BRIDGE 29
146TH STREET OVER LITTLE EAGLE CREEK IN SECTIONS 18 & 19, T18N, R3E,
WASHINGTON TOWNSHIP, HAMILTON COUNTY, INDIANA.

R2E R3E

HAMILTON 29
146TH STREET OVER
LITTLE EAGLE CREEK
PROJECT NO. 1401701

T 18 N

BEGIN PROJECT
STA. 102+95.50 "PR-A"

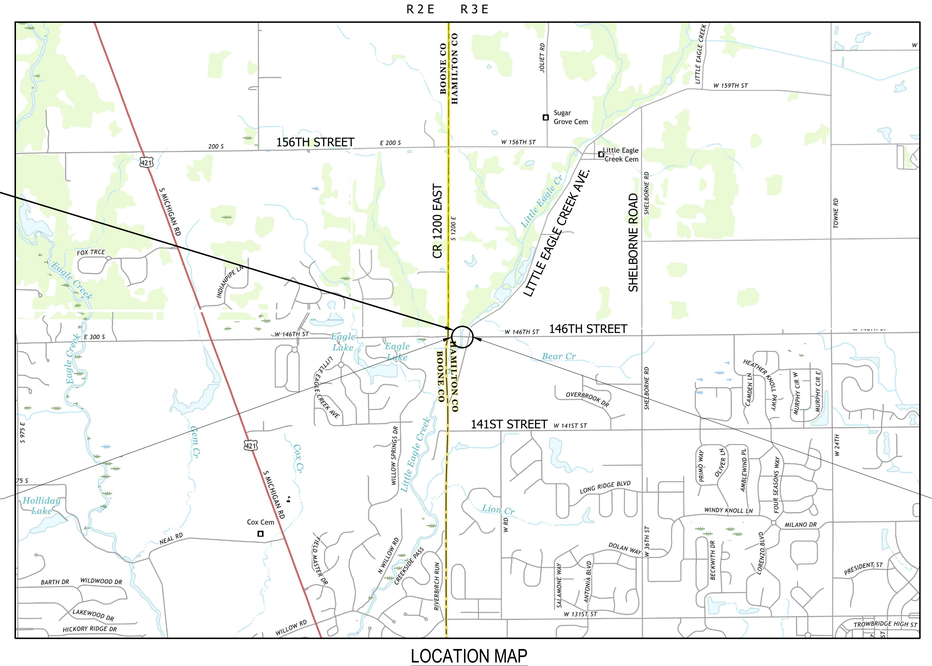

END PROJECT
STA. 104+56.50 "PR-A"

LOCATION MAP

SCALE 1" = 2000'

STAGE 3 PLANS 4-19-19

INDIANA DEPARTMENT OF TRANSPORTATION
STANDARD SPECIFICATIONS DATED 2018
TO BE USED WITH THESE PLANS

usi consultants
8415 East 56th Street
Indianapolis, Indiana 46216

PLANS PREPARED BY: USI Consultants, Inc. 317-544-4996 PHONE NUMBER

CERTIFIED BY: DATE

APPROVED FOR LETTING: INDIANA DEPARTMENT OF TRANSPORTATION DATE

NOT FOR CONSTRUCTION

BRIDGE NO.
HAMILTON 29
DESIGNATION NO.
0902302

SHEETS		
1	of	43

CONTRACT	PROJECT NO.
R-38073	1401701

S:\2003\Proj\2007-162\Plans\Bridge Plans\07-162 Title Sheet.dwg, Title, 4/17/2019 1:14:42 PM

U T I L I T I E S

BRIGHTHOUSE NETWORKS
3030 Roosevelt Avenue
Indianapolis, IN 46218
ATTN: Scott Bair
(317)-710-3004

Comcast Communications
9750 E. 150th St., Suite 1600
Noblesville, IN 46060
ATTN: Tim Gipson
(317)-774-3395

Boone County REMC
1207 Indianapolis Ave.
Lebanon, IN 46052
ATTN: Jamie Shields
(765)-482-2390

Duke Energy
1619 W. Deffenbaugh St.
Kokomo, IN 46902
ATTN: Carl Johnson
(765)-454-6189
Carl.Johnson@duke-energy.com

Vectren
16000 Allisonville Road (P.O. Box 1700)
Noblesville, IN 46061
ATTN: Holly Columbia
(317)-718-3639
hcolumbia@vectren.com

Buckeye Pipeline
940 Buckeye Road (P.O. Box 90)
Lima, OH 45802-0090
ATTN: Marty White
(414)-993-8008
mwhite@buckeye.com

Marathon/Ashland Pipeline
10722 E. CR. 300 North
Indianapolis, IN 46234
ATTN: Greg Newman
(419)-421-2211
gcnewman@marathonpetroleum.com

Clay Township Regional Waste District
10701 N. College Ave. Suite A
Indianapolis, IN 46280
ATTN: Ryan Hartman
(317)-844-9200
ryan.hartman@ctrwd.org

Westfield Public Works Department
2706 E. 171st Street
Westfield, IN 46074
ATTN: Harry Nikides
(317)-896-5452

AT&T
240 N. Meridian Street
Indianapolis, IN 46220
ATTN: Matt Spindler
(317)-265-3050
ms4822@att.com

Carmel City Water
3450 W. 131st Street
Westfield, IN 46074
ATTN: Jim Duffy
(317)-571-2451
jduffy@carmel.in.gov

I N D E X

SHEET N0.	SUBJECT
1	TITLE SHEET
2	INDEX SHEET
3	TYPICAL CROSS SECTION - LINE "PRA" (FOR INFORMATION ONLY)
4-5	GEOMETRIC TIE UP - ROUNDABOUT (FOR INFORMATION ONLY)
6-11	MAINTENANCE OF TRAFFIC (FOR INFORMATION ONLY)
12	PLAN - LINE "PR-A" (FOR INFORMATION ONLY)
13	PROFILE - LINE "PR-A" (FOR INFORMATION ONLY)
14-15	SOIL BORINGS
16	BRIDGE LAYOUT
17-18	GENERAL PLAN
19-23	END BENT DETAILS
24-25	BEAM DETAILS
26-30	SUPERSTRUCTURE DETAILS
31-32	SCREED DETAILS
33-36	APPROACH SLAB DETAILS
37-38	MODIFIED CONCRETE BRIDGE RAILING TRANSITION, TPS-2
39	ROAD AND BRIDGE SUMMARY
40-43	CROSS SECTIONS - LINE "PR-A" (FOR INFORMATION ONLY)

Indiana 811
Know what's below. Call before you dig.

1-800-382-5544
CALL BEFORE YOU DIG

CAUTION !!

THE LOCATIONS OF ALL EXISTING UNDERGROUND UTILITIES SHOWN ON THIS PLAN ARE BASED UPON ABOVE GROUND EVIDENCE (including, but not limited to, manholes, inlets, valves, and marks made upon the ground by others) AND ARE SPECULATIVE IN NATURE. THERE MAY ALSO BE OTHER EXISTING UNDERGROUND UTILITIES FOR WHICH THERE IS NO ABOVE GROUND EVIDENCE OR FOR WHICH NO ABOVE GROUND EVIDENCE WAS OBSERVED. THE EXACT LOCATIONS OF SAID EXISTING UNDERGROUND UTILITIES SHALL BE VERIFIED BY THE CONTRACTOR PRIOR TO ANY AND ALL CONSTRUCTION.

R E V I S I O N S

SHEET N0.	DATE	REVISED

NOT FOR CONSTRUCTION

DESIGNED: MKT DRAWN: DWB
CHECKED: MJH CHECKED: MJH

INDIANA
DEPARTMENT OF TRANSPORTATION

INDEX SHEET

HORIZONTAL SCALE	BRIDGE FILE
NONE	HAMILTON 29
VERTICAL SCALE	DESIGNATION
NONE	0902302

SURVEY BOOK	SHEETS
----	2 of 43
CONTRACT	PROJECT
R-38073	1401701

S:\2007Proj\2007-162\Plans\Bridge Plans\07-162 Index.dwg, Index Sheet, 4/11/2019 12:37:01 PM

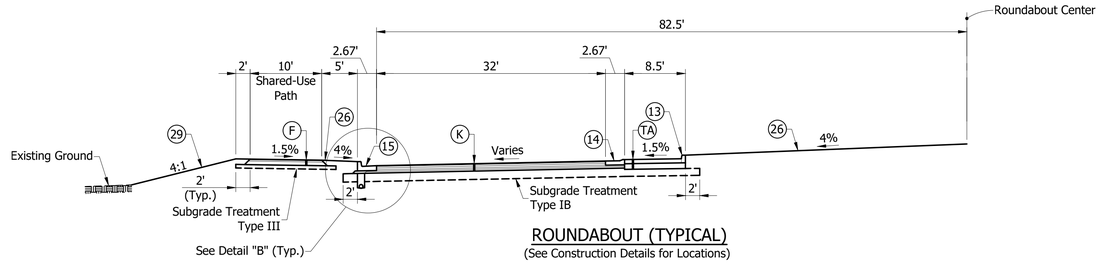

ROUNDABOUT (TYPICAL)

(See Construction Details for Locations)

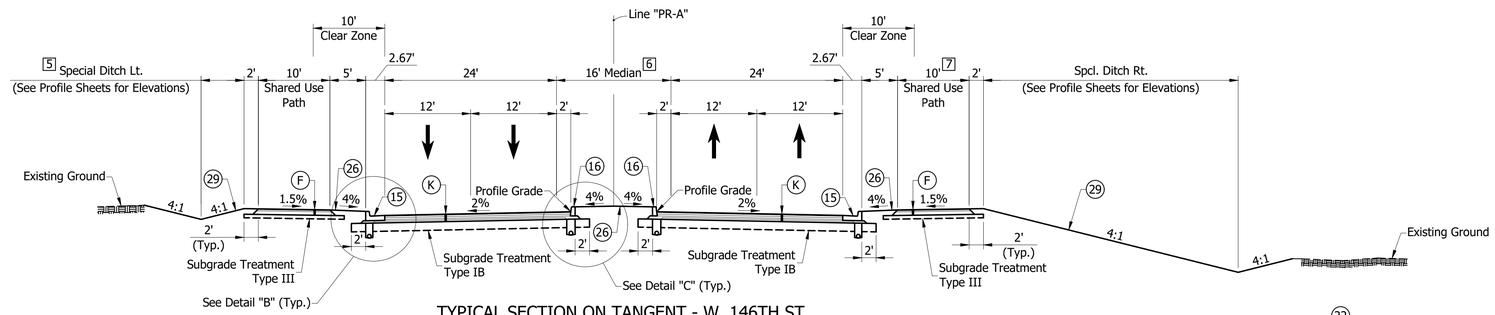

TYPICAL SECTION ON TANGENT - W. 146TH ST.

Sta. 100+00.00 to Sta. 102+95.50 Line "PR-A"
Sta. 104+56.50 to Sta. 105+40.56 Line "PR-A"

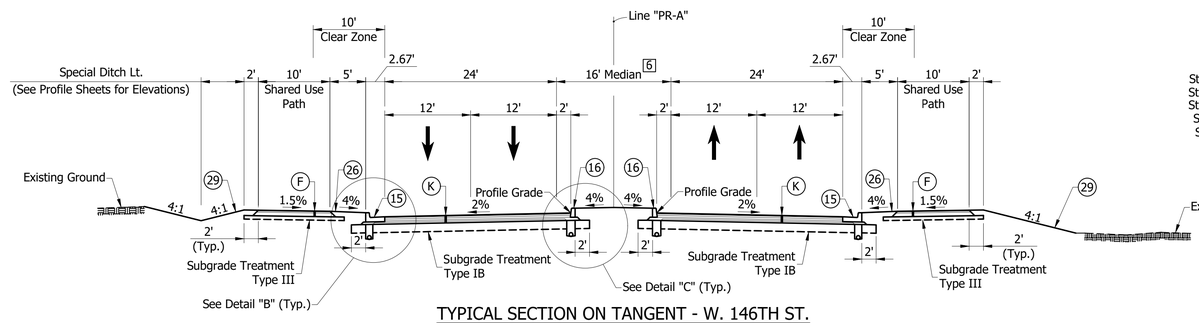

TYPICAL SECTION ON TANGENT - W. 146TH ST.

Sta. 107+08.50 to Sta. 109+15.00 Line "PR-A"
Sta. 114+45.00 to Sta. 121+74.32 Line "PR-A"

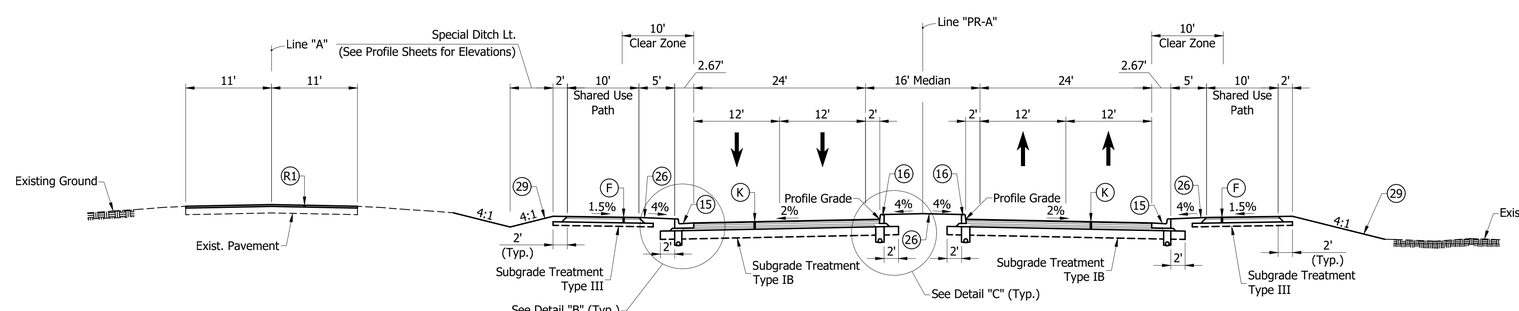

TYPICAL SECTION ON TANGENT - W. 146TH ST.

Sta. 121+74.32 to Sta. 124+00.00 Line "PR-A"

LEGEND

- (F) HMA for Sidewalk, Type A
  140#/syd HMA Surface, Type A on
  220#/syd HMA Base, Type A on
  6" Compacted Aggregate, No. 53, Base
- (K) Full Depth Pavement (Mainline and S Line)
  165#/syd QC/QA-HMA, 3, 76, Surface 9.5 mm - SMA on
  275#/syd QC/QA-HMA, 3, 76, Intermediate 19.0 mm on
  330#/syd QC/QA-HMA, 3, 64, Base 19.0 mm on
  250#/sys QC/QA-HMA, 4, 76, OG, 19.0 mm on
  330#/syd QC/QA-HMA, 3, 64, Base 19.0 mm
- (R1) HMA Resurfacing
  165#/syd QC/QA-HMA, 2, 64, Surface 9.5 mm on
  1 1/2" Surface Milling of Existing HMA Pavement
- (TA) PCCP for Truck Apron
  7" PCCP (15' Max. Joint Spacing, 1" dia. Dowel Bars) on
  9.5" Compacted Aggregate, No. 53, Base
- (13) Curb, Integral Concrete
- (14) Curb and Gutter, B, Concrete, Modified
- (15) Curb and Gutter, Combined, Concrete, Modified
- (16) Curb, Concrete
- (22) Center Curb, Type "C"
- (26) Sodding, Nursery
- (29) Seeding, U

5 8' Bottom Ditch Sta. 101+00.00 to Sta. 103+43.00 "PR-A" Lt.

6 Varies at Roundabout (See Construction Details)

7 Begin Shared Use Path Sta. 100+10.00 "PR-A" Rt.

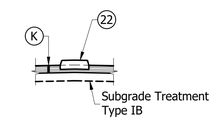

CENTER CURB, TYPE "C"

Sta. 102+85.75 to Sta. 102+95.50 Line "PR-A"
Sta. 104+56.50 to Sta. 105+40.56 Line "PR-A"
Sta. 107+08.50 to Sta. 108+07.98 Line "PR-A"
Sta. 23+52.66 to Sta. 23+99.75 Line "S-1-A"
Sta.25+51.77 to Sta. 26+00.24 Line "S-1-A"

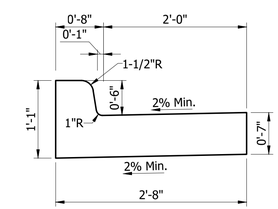

Curb and Gutter, Combined, Concrete, Modified
(2.0' Gutter)
Not to scale

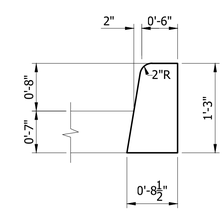

Curb, Concrete
(Vertical, 8" Height)
Not to scale

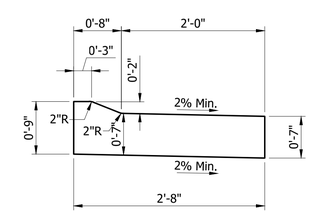

Curb and Gutter, B, Concrete, Modified
(Sloping)
Not to scale

FOR INFORMATION ONLY

NOT FOR CONSTRUCTION

DESIGNED: JGP	DRAWN: JGP
CHECKED: MPB	CHECKED: MPB

INDIANA
DEPARTMENT OF TRANSPORTATION

TYPICAL CROSS SECTIONS
146TH STREET

HORIZONTAL SCALE	BRIDGE FILE
1" = 10'	
VERTICAL SCALE	DESIGNATION
1" = 10'	1401701
SURVEY BOOK	SHEETS
	3 of 43
CONTRACT	PROJECT
R-38073	1401701

S:\2007Proj\2007-162\Plans\Road Plans\03-Typical Cross Sections\003-USS-146th-Typical-Cross-Sections-010.dwg, Sheet:01, 4/11/2019 12:46:10 PM

ALIGNMENT CURVE DATA										
CURVE #	REF. LINE	P.I. STATION	P.I. NORTHING	P.I. EASTING	Δ DELTA	TANGENT	RADIUS	LENGTH	CURVE BEGIN STATION	CURVE END STATION
C1	"OEP-NW"	10+46.00	120401.0243	93172.3944	40°24'18"	46.00	125.00	88.15	P.C. 10+00.00	P.T. 10+88.15
C2	"OEP-NW"	11+05.45	120348.7936	93136.6388	38°10'15"	17.30	50.00	33.31	P.C. 10+88.15	P.T. 11+21.46
C3	"OEP-NW"	11+91.23	120322.7044	93053.5651	22°32'56"	69.77	350.00	137.74	P.C. 11+21.46	P.T. 12+59.20
C53	"OEP-NW"	13+24.00	120334.6999	92919.5257	1°03'21"	64.80	7032.00	129.60	P.C. 12+59.20	P.T. 13+88.80

ALIGNMENT CURVE DATA										
CURVE #	REF. LINE	P.I. STATION	P.I. NORTHING	P.I. EASTING	Δ DELTA	TANGENT	RADIUS	LENGTH	CURVE BEGIN STATION	CURVE END STATION
C27	"WL"	10+43.12	120302.7245	92915.8642	2°01'00"	43.12	2450.00	86.23	P.C. 10+00.00	P.T. 10+86.23
C28	"WL"	11+17.13	120299.8735	92989.8277	0°08'30"	30.90	25000.00	61.79	P.C. 10+86.23	P.T. 11+48.03
C29	"WL"	11+58.75	120298.1678	93031.4091	3°04'12"	10.72	400.00	21.43	P.C. 11+48.03	P.T. 11+69.46
C30	"WL"	12+06.27	120298.7658	93078.9332	12°21'28"	36.81	340.00	73.33	P.C. 11+69.46	P.T. 12+42.79

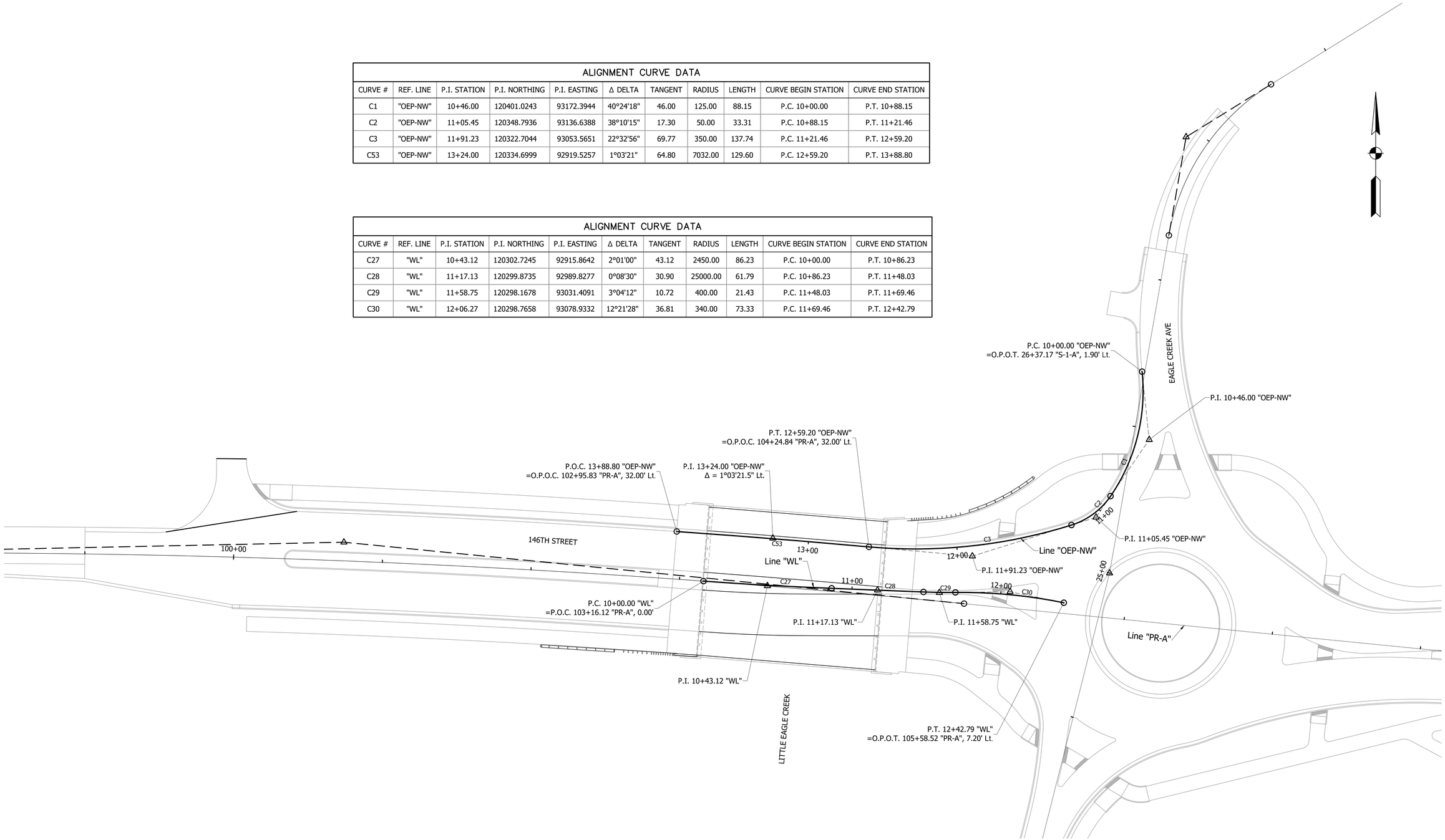

FOR INFORMATION ONLY

NOT FOR CONSTRUCTION

DESIGNED: JGP	DRAWN: JGP
CHECKED: MPB	CHECKED: MPB

INDIANA
DEPARTMENT OF TRANSPORTATION

GEOMETRIC TIE UP SHEET
ROUNDABOUT

HORIZONTAL SCALE	BRIDGE FILE
1" = 30'	
VERTICAL SCALE	DESIGNATION
1" = 30'	1401701
SURVEY BOOK	SHEETS
	4 of 43
CONTRACT	PROJECT
R-38073	1401701

S:\2007Proj\2007-162\Plans\Road Plans\05-Geometric Tie-Up Sheet\2007-162 Geometric Tie-Up.dwg, Sheet 2, 4/11/2019 12:46:09 PM

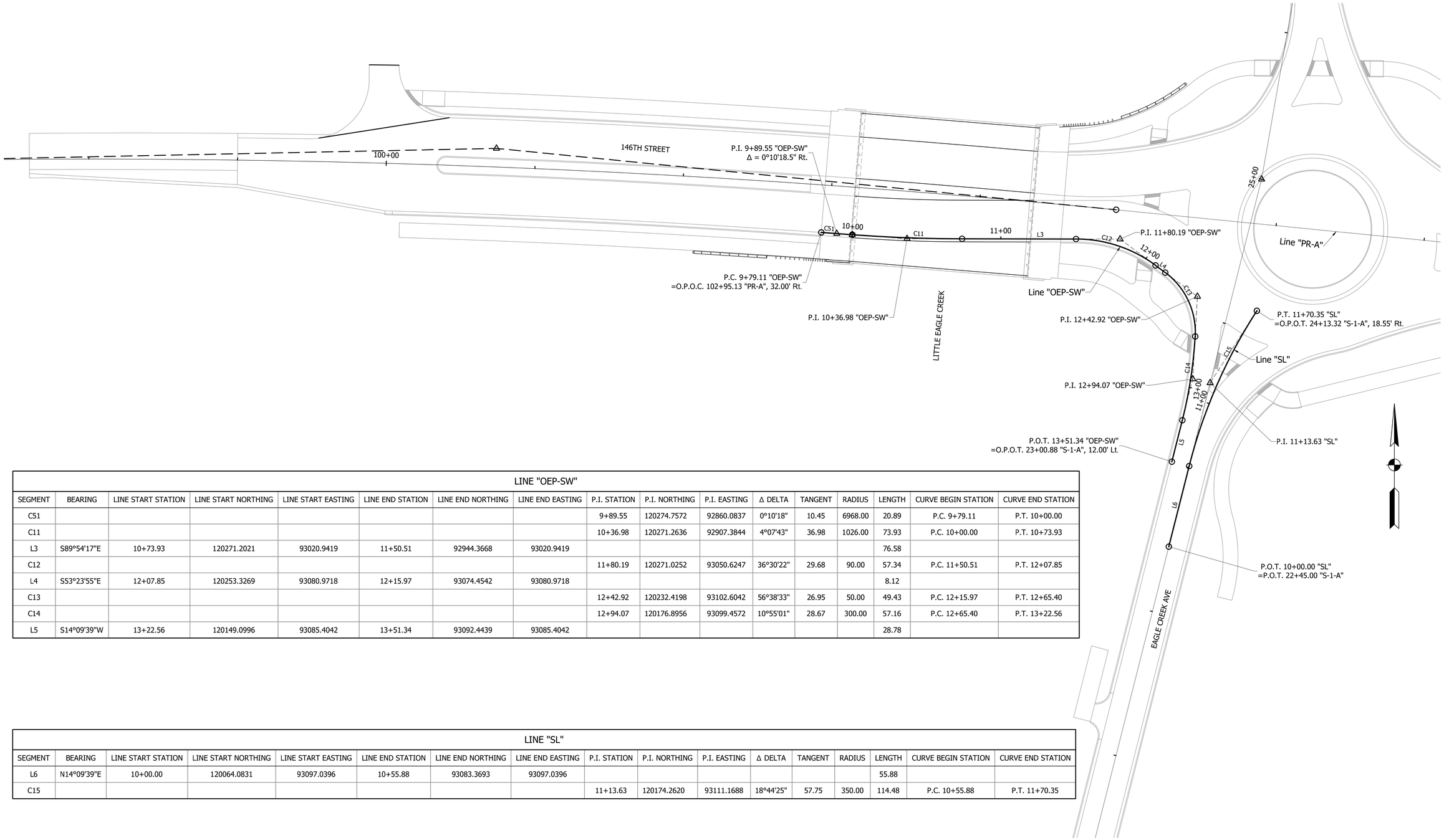

LINE "OEP-SW"																
SEGMENT	BEARING	LINE START STATION	LINE START NORTHING	LINE START EASTING	LINE END STATION	LINE END NORTHING	LINE END EASTING	P.I. STATION	P.I. NORTHING	P.I. EASTING	Δ DELTA	TANGENT	RADIUS	LENGTH	CURVE BEGIN STATION	CURVE END STATION
C51								9+89.55	120274.7572	92860.0837	0°10'18"	10.45	6968.00	20.89	P.C. 9+79.11	P.T. 10+00.00
C11								10+36.98	120271.2636	92907.3844	4°07'43"	36.98	1026.00	73.93	P.C. 10+00.00	P.T. 10+73.93
L3	S89°54'17"E	10+73.93	120271.2021	93020.9419	11+50.51	92944.3668	93020.9419							76.58		
C12								11+80.19	120271.0252	93050.6247	36°30'22"	29.68	90.00	57.34	P.C. 11+50.51	P.T. 12+07.85
L4	S53°23'55"E	12+07.85	120253.3269	93080.9718	12+15.97	93074.4542	93080.9718							8.12		
C13								12+42.92	120232.4198	93102.6042	56°38'33"	26.95	50.00	49.43	P.C. 12+15.97	P.T. 12+65.40
C14								12+94.07	120176.8956	93099.4572	10°55'01"	28.67	300.00	57.16	P.C. 12+65.40	P.T. 13+22.56
L5	S14°09'39"W	13+22.56	120149.0996	93085.4042	13+51.34	93092.4439	93085.4042							28.78		

LINE "SL"																
SEGMENT	BEARING	LINE START STATION	LINE START NORTHING	LINE START EASTING	LINE END STATION	LINE END NORTHING	LINE END EASTING	P.I. STATION	P.I. NORTHING	P.I. EASTING	Δ DELTA	TANGENT	RADIUS	LENGTH	CURVE BEGIN STATION	CURVE END STATION
L6	N14°09'39"E	10+00.00	120064.0831	93097.0396	10+55.88	93083.3693	93097.0396							55.88		
C15								11+13.63	120174.2620	93111.1688	18°44'25"	57.75	350.00	114.48	P.C. 10+55.88	P.T. 11+70.35

FOR INFORMATION ONLY

NOT FOR CONSTRUCTION

DESIGNED: JGP DRAWN: JGP
CHECKED: MPB CHECKED: MPB

INDIANA
DEPARTMENT OF TRANSPORTATION

GEOMETRIC TIE UP SHEET
ROUNDABOUT

HORIZONTAL SCALE	BRIDGE FILE
1" = 30'	
VERTICAL SCALE	DESIGNATION
1" = 30'	1401701
SURVEY BOOK	SHEETS
	5 of 43
CONTRACT	PROJECT
R-38073	1401701

S:\2007Proj\2007-162\Plans\Road Plans\05-Geometric Tie-Up Sheet\2007-162 Geometric Tie-Up.dwg, Sheet 3, 4/11/2019 12:45:50 PM

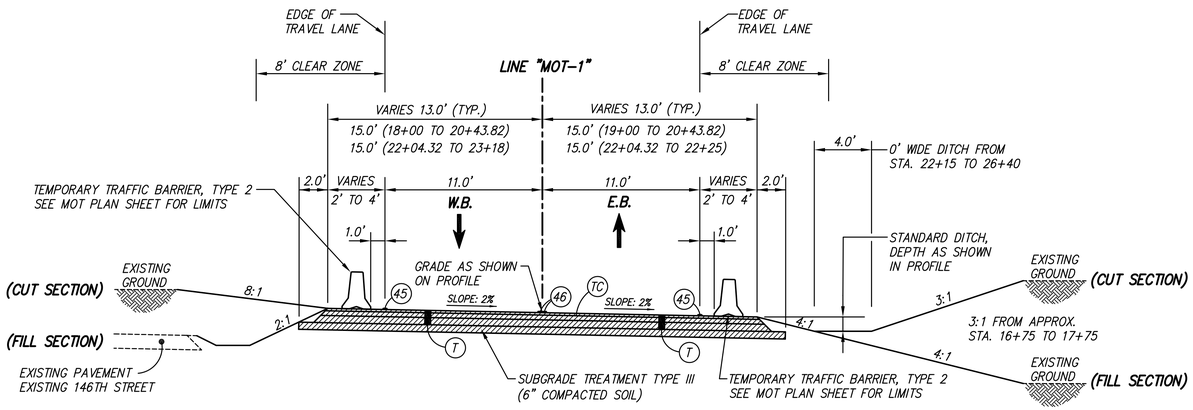

PHASE 1 STAGE 1
TYPICAL SECTION LINE "MOT-1"
STATION 15+07.41 TO STATION 20+43.82
STATION 22+04.32 TO STATION 26+47.74
CONSTRUCTION ZONE DESIGN SPEED = 35 M.P.H.
Scale 1" = 5'

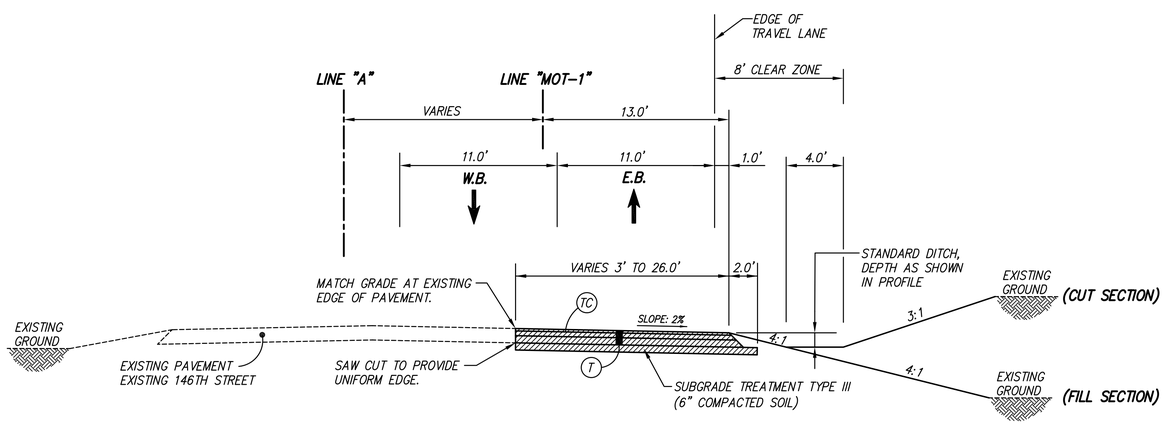

PHASE 1 STAGE 1
TYPICAL SECTION LINE "MOT-1"
STATION 11+33 TO STATION 15+07.41
CONSTRUCTION ZONE DESIGN SPEED = 35 M.P.H.
Scale 1" = 5'

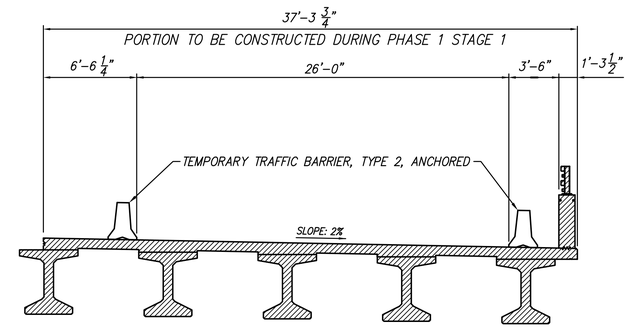

PHASE 1 STAGE 1
BRIDGE OVER LITTLE EAGLE CREEK
CONSTRUCTION ZONE DESIGN SPEED = 35 M.P.H.
Scale 1" = 5'

LEGEND

- (T) HMA FOR TEMPORARY PAVEMENT, TYPE C, CONSISTING OF:
  220#/SYS HMA SURFACE, TYPE C ON
  440#/SYS HMA BASE, TYPE C ON
  6" COMPACTED AGGREGATE, NO. 53, BASE
- (TC) ASPHALT FOR TACK COAT
- (45) TEMPORARY PAVEMENT MARKING, 4" (WHITE)
- (46) TEMPORARY PAVEMENT MARKING, 4" (YELLOW)
- TRAFFIC FLOW DIRECTION
- STANDARD DRUMS (SEE STANDARD DRAWINGS FOR SPACING)
- AREA TO BE CONSTRUCTED DURING THIS PHASE

MAINTENANCE OF TRAFFIC NOTES

1. FOR MAINTENANCE OF TRAFFIC DETAILS SEE MAINTENANCE OF TRAFFIC PLAN SHEETS.
2. EXISTING PAVEMENT MARKINGS THAT CONFLICT WITH EACH MAINTENANCE OF TRAFFIC SCHEME SHALL BE REMOVED PRIOR TO CONSTRUCTION.
3. WHENEVER POSSIBLE PRIVATE DRIVEWAYS SHALL BE CONSTRUCTED IN PORTIONS TO ALLOW ACCESS TO PROPERTIES AT ALL TIMES. WHENEVER PRIVATE DRIVEWAYS ARE TOO NARROW TO ACCOMMODATE CONTINUOUS ACCESS, THE CONTRACTOR SHALL CONTACT THE PROPERTY OWNER AND WORK OUT A TIME SCHEDULE FOR DRIVEWAY CONSTRUCTION THAT WILL CAUSE THE LEAST INCONVENIENCE TO THE PROPERTY OWNER.
4. STREET APPROACHES ARE TO BE CLOSED TO THROUGH TRAFFIC DURING THEIR CONSTRUCTION. BEFORE ANY CLOSURES ARE MADE, THE CONTRACTOR MUST FIRST CONTACT LOCAL OFFICIALS, POLICE, FIRE, LOCAL SCHOOL OFFICIALS, U.S. POSTAL SERVICE, AND OTHERS AS NECESSARY TO MINIMIZE DISRUPTIONS TO LOCAL SERVICE. NO TWO ADJACENT APPROACHES SHALL BE CLOSED AT THE SAME TIME.
5. UTILIZE FLAGGERS AS NEEDED FOR SHORT DURATIONS. FOR TEMPORARY ADVANCE SIGNING REQUIREMENTS, SEE INDOT STANDARD DRAWINGS.
6. FOR DETAILS AND SPACING OF DETOUR SIGNS, CONSTRUCTION SIGNS AND CHANNELIZATION DEVICES, SEE INDOT STANDARD DRAWINGS.
7. ADVANCE SIGNING TO BE IN PLACE AT BEGINNING AND END OF PROJECT BEFORE PRIOR TO ANY CONSTRUCTION ACTIVITY.

FOR INFORMATION ONLY

Stage 3 Plans

RECOMMENDED FOR APPROVAL _____ DESIGN ENGINEER DATE

DESIGNED: G.S.H. DRAWN: G.S.H.
CHECKED: J.L.B. CHECKED: J.L.B.

INDIANA DEPARTMENT OF TRANSPORTATION

MAINTENANCE OF TRAFFIC
TYPICAL CROSS SECTIONS

HORIZONTAL SCALE	BRIDGE FILE
AS NOTED	
VERTICAL SCALE	DESIGNATION
	1401701
SURVEY BOOK	SHEETS
	6 of 43
CONTRACT	PROJECT
	1401701

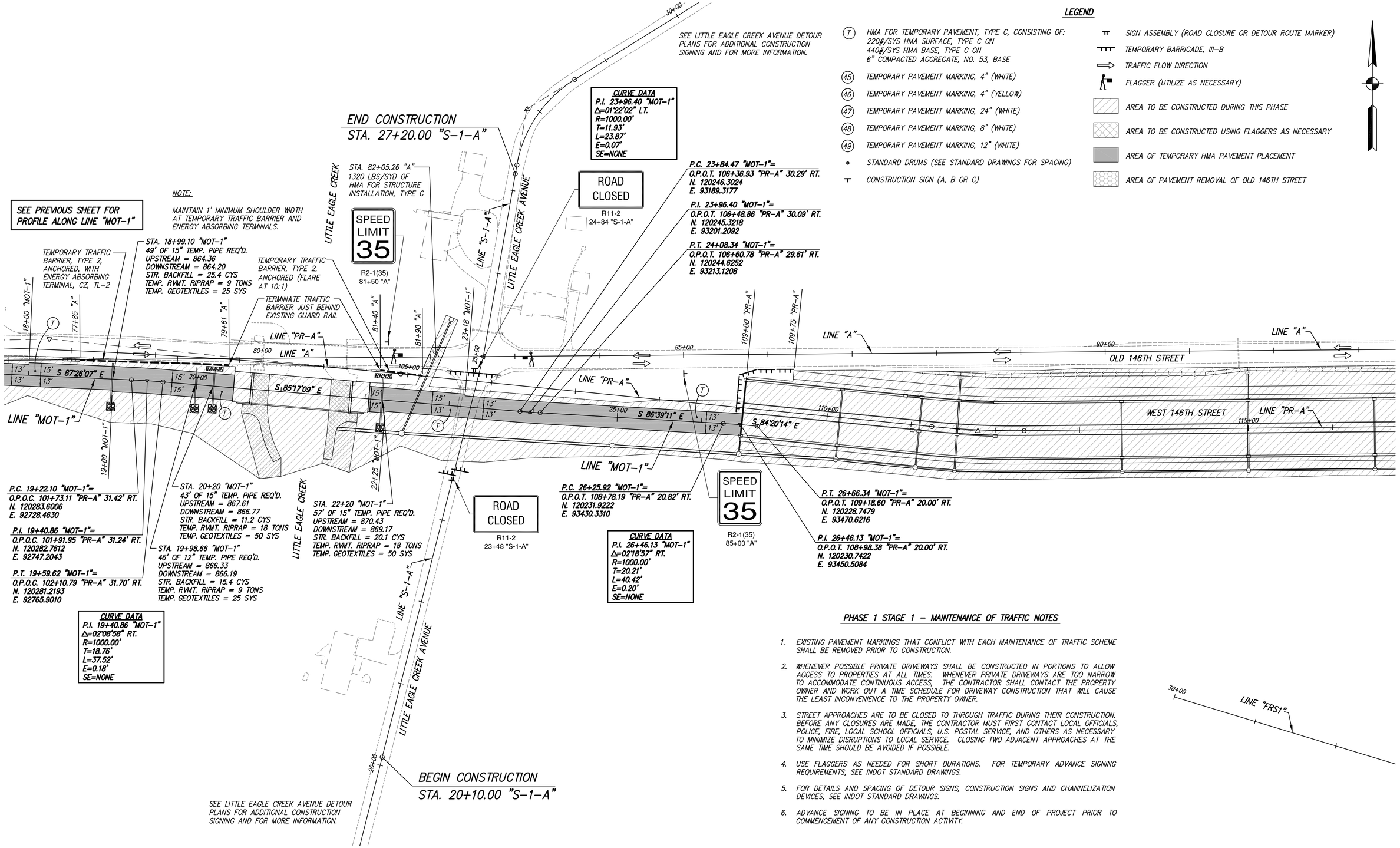

LEGEND

- (T) HMA FOR TEMPORARY PAVEMENT, TYPE C, CONSISTING OF: 220#/SYS HMA SURFACE, TYPE C ON 440#/SYS HMA BASE, TYPE C ON 6" COMPACTED AGGREGATE, NO. 53, BASE
- (45) TEMPORARY PAVEMENT MARKING, 4" (WHITE)
- (46) TEMPORARY PAVEMENT MARKING, 4" (YELLOW)
- (47) TEMPORARY PAVEMENT MARKING, 24" (WHITE)
- (48) TEMPORARY PAVEMENT MARKING, 8" (WHITE)
- (49) TEMPORARY PAVEMENT MARKING, 12" (WHITE)
- STANDARD DRUMS (SEE STANDARD DRAWINGS FOR SPACING)
- CONSTRUCTION SIGN (A, B OR C)
- SIGN ASSEMBLY (ROAD CLOSURE OR DETOUR ROUTE MARKER)
- TEMPORARY BARRICADE, III-B
- TRAFFIC FLOW DIRECTION
- FLAGGER (UTILIZE AS NECESSARY)
- AREA TO BE CONSTRUCTED DURING THIS PHASE
- AREA TO BE CONSTRUCTED USING FLAGGERS AS NECESSARY
- AREA OF TEMPORARY HMA PAVEMENT PLACEMENT
- AREA OF PAVEMENT REMOVAL OF OLD 146TH STREET

PHASE 1 STAGE 1 – MAINTENANCE OF TRAFFIC NOTES

1. EXISTING PAVEMENT MARKINGS THAT CONFLICT WITH EACH MAINTENANCE OF TRAFFIC SCHEME SHALL BE REMOVED PRIOR TO CONSTRUCTION.
2. WHENEVER POSSIBLE PRIVATE DRIVEWAYS SHALL BE CONSTRUCTED IN PORTIONS TO ALLOW ACCESS TO PROPERTIES AT ALL TIMES. WHENEVER PRIVATE DRIVEWAYS ARE TOO NARROW TO ACCOMMODATE CONTINUOUS ACCESS, THE CONTRACTOR SHALL CONTACT THE PROPERTY OWNER AND WORK OUT A TIME SCHEDULE FOR DRIVEWAY CONSTRUCTION THAT WILL CAUSE THE LEAST INCONVENIENCE TO THE PROPERTY OWNER.
3. STREET APPROACHES ARE TO BE CLOSED TO THROUGH TRAFFIC DURING THEIR CONSTRUCTION. BEFORE ANY CLOSURES ARE MADE, THE CONTRACTOR MUST FIRST CONTACT LOCAL OFFICIALS, POLICE, FIRE, LOCAL SCHOOL OFFICIALS, U.S. POSTAL SERVICE, AND OTHERS AS NECESSARY TO MINIMIZE DISRUPTIONS TO LOCAL SERVICE. CLOSING TWO ADJACENT APPROACHES AT THE SAME TIME SHOULD BE AVOIDED IF POSSIBLE.
4. USE FLAGGERS AS NEEDED FOR SHORT DURATIONS. FOR TEMPORARY ADVANCE SIGNING REQUIREMENTS, SEE INDOT STANDARD DRAWINGS.
5. FOR DETAILS AND SPACING OF DETOUR SIGNS, CONSTRUCTION SIGNS AND CHANNELIZATION DEVICES, SEE INDOT STANDARD DRAWINGS.
6. ADVANCE SIGNING TO BE IN PLACE AT BEGINNING AND END OF PROJECT PRIOR TO COMMENCEMENT OF ANY CONSTRUCTION ACTIVITY.

FOR INFORMATION ONLY

Stage 3 Plans

RECOMMENDED FOR APPROVAL _____ DESIGN ENGINEER DATE

DESIGNED: G.S.H. DRAWN: G.S.H.

CHECKED: J.L.B. CHECKED: J.L.B.

INDIANA DEPARTMENT OF TRANSPORTATION

MAINTENANCE OF TRAFFIC
PHASE 1 STAGE 1

HORIZONTAL SCALE	BRIDGE FILE
1" = 50'	
VERTICAL SCALE	DESIGNATION
	1401701
SURVEY BOOK	SHEETS
	7 of 43
CONTRACT	PROJECT
	1401701

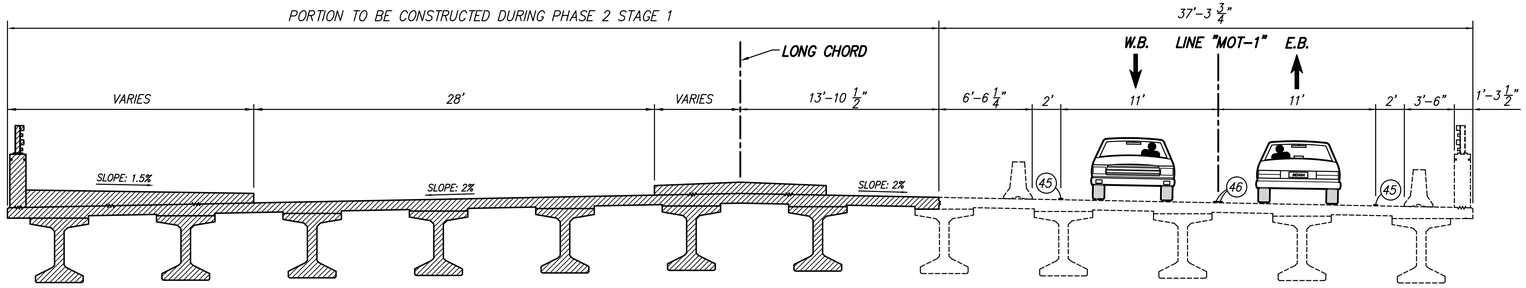

PHASE 2 STAGE 1

BRIDGE OVER LITTLE EAGLE CREEK

CONSTRUCTION ZONE DESIGN SPEED = 35 M.P.H.

Scale 1" = 5'

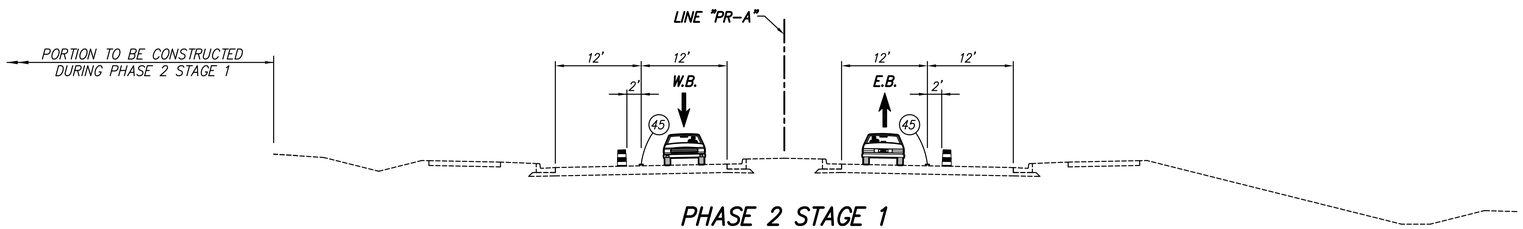

PHASE 2 STAGE 1

FROM STA. 126+60 LINE "PR-A" TO SHELBORNE ROAD

CONSTRUCTION ZONE DESIGN SPEED = 35 M.P.H.

Scale 1" = 10'

TRANSITION WESTBOUND TRAFFIC FROM NEWLY CONSTRUCTED NORTHERNMOST EASTBOUND LANE TO NEWLY CONSTRUCTED SOUTHERNMOST WESTBOUND LANE. TRANSITION EASTBOUND TRAFFIC FROM NEWLY CONSTRUCTED SOUTHERNMOST EASTBOUND LANE TO NEWLY CONSTRUCTED NORTHERNMOST EASTBOUND LANE. TRANSITION LIMITS FROM STATION 124+30 TO STATION 126+60 LINE "PR-A".

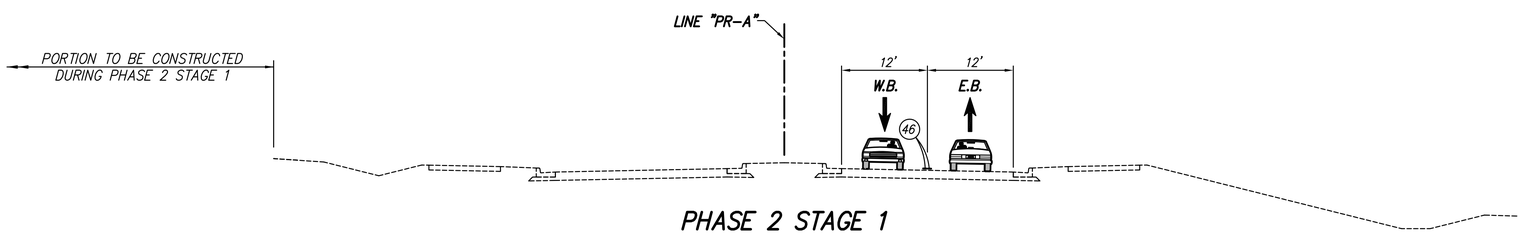

PHASE 2 STAGE 1

FROM STATION 109+00 TO STATION 124+30 LINE "PR-A"

CONSTRUCTION ZONE DESIGN SPEED = 35 M.P.H.

Scale 1" = 10'

LEGEND

- (T) HMA FOR TEMPORARY PAVEMENT, TYPE C, CONSISTING OF: 220#/SYS HMA SURFACE, TYPE C ON 440#/SYS HMA BASE, TYPE C ON 6" COMPACTED AGGREGATE, NO. 53, BASE
- (TC) ASPHALT FOR TACK COAT
- (45) TEMPORARY PAVEMENT MARKING, 4" (WHITE)
- (46) TEMPORARY PAVEMENT MARKING, 4" (YELLOW)
- TRAFFIC FLOW DIRECTION
- STANDARD DRUMS (SEE STANDARD DRAWINGS FOR SPACING)
- AREA TO BE CONSTRUCTED DURING THIS PHASE

MAINTENANCE OF TRAFFIC NOTES

1. FOR MAINTENANCE OF TRAFFIC DETAILS SEE MAINTENANCE OF TRAFFIC PLAN SHEETS.
2. EXISTING PAVEMENT MARKINGS THAT CONFLICT WITH EACH MAINTENANCE OF TRAFFIC SCHEME SHALL BE REMOVED PRIOR TO CONSTRUCTION.
3. WHENEVER POSSIBLE PRIVATE DRIVEWAYS SHALL BE CONSTRUCTED IN PORTIONS TO ALLOW ACCESS TO PROPERTIES AT ALL TIMES. WHENEVER PRIVATE DRIVEWAYS ARE TOO NARROW TO ACCOMMODATE CONTINUOUS ACCESS, THE CONTRACTOR SHALL CONTACT THE PROPERTY OWNER AND WORK OUT A TIME SCHEDULE FOR DRIVEWAY CONSTRUCTION THAT WILL CAUSE THE LEAST INCONVENIENCE TO THE PROPERTY OWNER.
4. STREET APPROACHES ARE TO BE CLOSED TO THROUGH TRAFFIC DURING THEIR CONSTRUCTION. BEFORE ANY CLOSURES ARE MADE, THE CONTRACTOR MUST FIRST CONTACT LOCAL OFFICIALS, POLICE, FIRE, LOCAL SCHOOL OFFICIALS, U.S. POSTAL SERVICE, AND OTHERS AS NECESSARY TO MINIMIZE DISRUPTIONS TO LOCAL SERVICE. NO TWO ADJACENT APPROACHES SHALL BE CLOSED AT THE SAME TIME.
5. UTILIZE FLAGGERS AS NEEDED FOR SHORT DURATIONS. FOR TEMPORARY ADVANCE SIGNING REQUIREMENTS, SEE INDOT STANDARD DRAWINGS.
6. FOR DETAILS AND SPACING OF DETOUR SIGNS, CONSTRUCTION SIGNS AND CHANNELIZATION DEVICES, SEE INDOT STANDARD DRAWINGS.
7. ADVANCE SIGNING TO BE IN PLACE AT BEGINNING AND END OF PROJECT BEFORE PRIOR TO ANY CONSTRUCTION ACTIVITY.

FOR INFORMATION ONLY

Stage 3 Plans

RECOMMENDED FOR APPROVAL _____ DESIGN ENGINEER DATE

DESIGNED: J.L.B. DRAWN: J.L.B

CHECKED: D.W.C. CHECKED: D.W.C.

INDIANA DEPARTMENT OF TRANSPORTATION

MAINTENANCE OF TRAFFIC TYPICAL CROSS SECTIONS

HORIZONTAL SCALE	BRIDGE FILE
AS NOTED	
VERTICAL SCALE	DESIGNATION
	1401701
SURVEY BOOK	SHEETS
	8 of 43
CONTRACT	PROJECT
	1401701

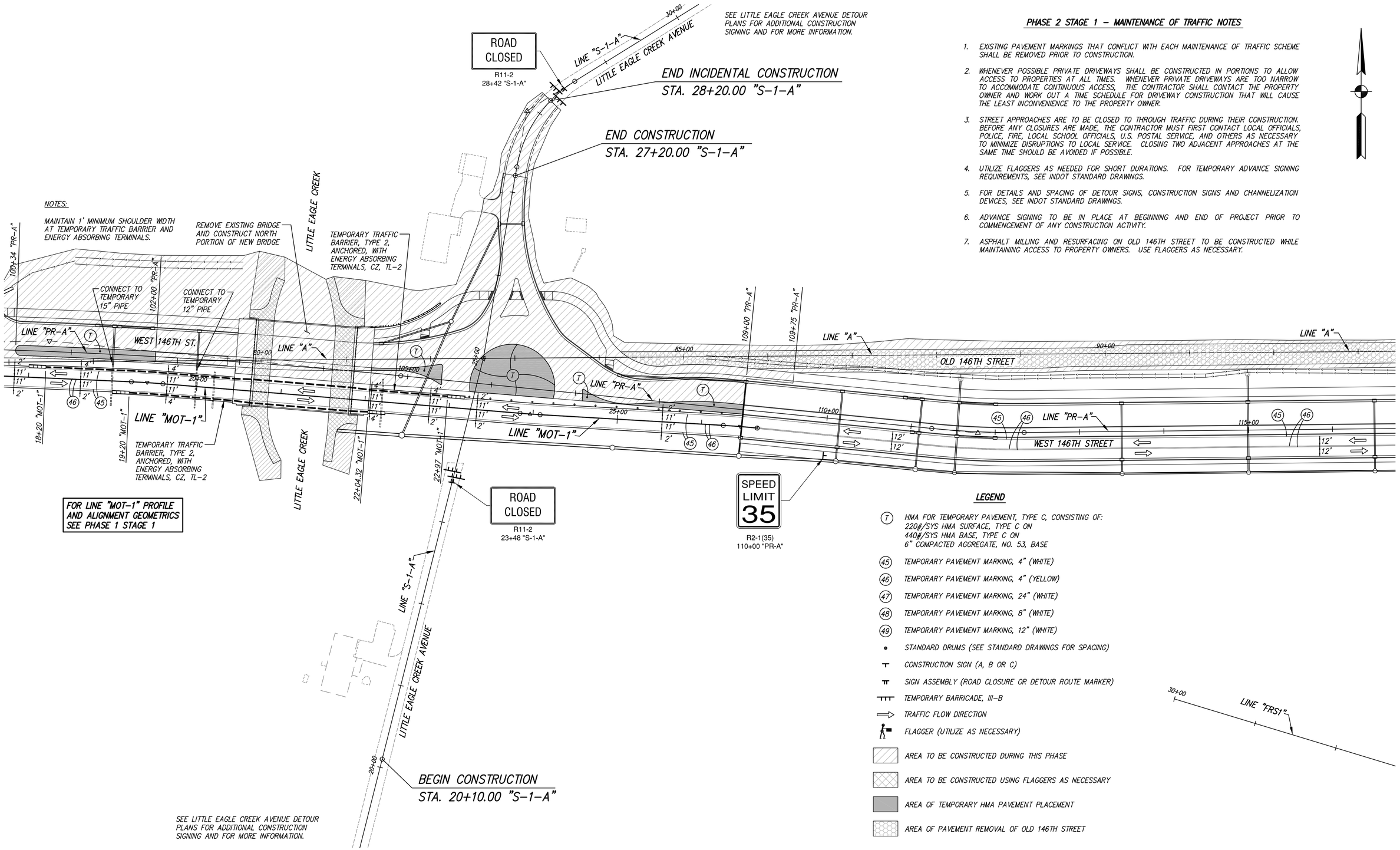

SEE LITTLE EAGLE CREEK AVENUE DETOUR PLANS FOR ADDITIONAL CONSTRUCTION SIGNING AND FOR MORE INFORMATION.

NOTES:

MAINTAIN 1' MINIMUM SHOULDER WIDTH AT TEMPORARY TRAFFIC BARRIER AND ENERGY ABSORBING TERMINALS.

REMOVE EXISTING BRIDGE AND CONSTRUCT NORTH PORTION OF NEW BRIDGE

TEMPORARY TRAFFIC BARRIER, TYPE 2, ANCHORED, WITH ENERGY ABSORBING TERMINALS, CZ, TL-2

CONNECT TO TEMPORARY 15" PIPE

CONNECT TO TEMPORARY 12" PIPE

TEMPORARY TRAFFIC BARRIER, TYPE 2, ANCHORED, WITH ENERGY ABSORBING TERMINALS, CZ, TL-2

FOR LINE "MOT-1" PROFILE AND ALIGNMENT GEOMETRICS SEE PHASE 1 STAGE 1

SEE LITTLE EAGLE CREEK AVENUE DETOUR PLANS FOR ADDITIONAL CONSTRUCTION SIGNING AND FOR MORE INFORMATION.

PHASE 2 STAGE 1 – MAINTENANCE OF TRAFFIC NOTES

1. EXISTING PAVEMENT MARKINGS THAT CONFLICT WITH EACH MAINTENANCE OF TRAFFIC SCHEME SHALL BE REMOVED PRIOR TO CONSTRUCTION.
2. WHENEVER POSSIBLE PRIVATE DRIVEWAYS SHALL BE CONSTRUCTED IN PORTIONS TO ALLOW ACCESS TO PROPERTIES AT ALL TIMES. WHENEVER PRIVATE DRIVEWAYS ARE TOO NARROW TO ACCOMMODATE CONTINUOUS ACCESS, THE CONTRACTOR SHALL CONTACT THE PROPERTY OWNER AND WORK OUT A TIME SCHEDULE FOR DRIVEWAY CONSTRUCTION THAT WILL CAUSE THE LEAST INCONVENIENCE TO THE PROPERTY OWNER.
3. STREET APPROACHES ARE TO BE CLOSED TO THROUGH TRAFFIC DURING THEIR CONSTRUCTION. BEFORE ANY CLOSURES ARE MADE, THE CONTRACTOR MUST FIRST CONTACT LOCAL OFFICIALS, POLICE, FIRE, LOCAL SCHOOL OFFICIALS, U.S. POSTAL SERVICE, AND OTHERS AS NECESSARY TO MINIMIZE DISRUPTIONS TO LOCAL SERVICE. CLOSING TWO ADJACENT APPROACHES AT THE SAME TIME SHOULD BE AVOIDED IF POSSIBLE.
4. UTILIZE FLAGGERS AS NEEDED FOR SHORT DURATIONS. FOR TEMPORARY ADVANCE SIGNING REQUIREMENTS, SEE INDOT STANDARD DRAWINGS.
5. FOR DETAILS AND SPACING OF DETOUR SIGNS, CONSTRUCTION SIGNS AND CHANNELIZATION DEVICES, SEE INDOT STANDARD DRAWINGS.
6. ADVANCE SIGNING TO BE IN PLACE AT BEGINNING AND END OF PROJECT PRIOR TO COMMENCEMENT OF ANY CONSTRUCTION ACTIVITY.
7. ASPHALT MILLING AND RESURFACING ON OLD 146TH STREET TO BE CONSTRUCTED WHILE MAINTAINING ACCESS TO PROPERTY OWNERS. USE FLAGGERS AS NECESSARY.

LEGEND

- (T) HMA FOR TEMPORARY PAVEMENT, TYPE C, CONSISTING OF: 220#/SYS HMA SURFACE, TYPE C ON 440#/SYS HMA BASE, TYPE C ON 6" COMPACTED AGGREGATE, NO. 53, BASE
- (45) TEMPORARY PAVEMENT MARKING, 4" (WHITE)
- (46) TEMPORARY PAVEMENT MARKING, 4" (YELLOW)
- (47) TEMPORARY PAVEMENT MARKING, 24" (WHITE)
- (48) TEMPORARY PAVEMENT MARKING, 8" (WHITE)
- (49) TEMPORARY PAVEMENT MARKING, 12" (WHITE)
- STANDARD DRUMS (SEE STANDARD DRAWINGS FOR SPACING)
- CONSTRUCTION SIGN (A, B OR C)
- SIGN ASSEMBLY (ROAD CLOSURE OR DETOUR ROUTE MARKER)
- TEMPORARY BARRICADE, III-B
- TRAFFIC FLOW DIRECTION
- FLAGGER (UTILIZE AS NECESSARY)
- AREA TO BE CONSTRUCTED DURING THIS PHASE
- AREA TO BE CONSTRUCTED USING FLAGGERS AS NECESSARY
- AREA OF TEMPORARY HMA PAVEMENT PLACEMENT
- AREA OF PAVEMENT REMOVAL OF OLD 146TH STREET

FOR INFORMATION ONLY

Stage 3 Plans

RECOMMENDED FOR APPROVAL _____ DESIGN ENGINEER DATE

DESIGNED: G.S.H. DRAWN: G.S.H.

CHECKED: J.L.B. CHECKED: J.L.B.

INDIANA DEPARTMENT OF TRANSPORTATION

MAINTENANCE OF TRAFFIC
PHASE 2 STAGE 1

HORIZONTAL SCALE	BRIDGE FILE
1" = 50'	
VERTICAL SCALE	DESIGNATION
	1401701
SURVEY BOOK	SHEETS
	9 of 43
CONTRACT	PROJECT
	1401701

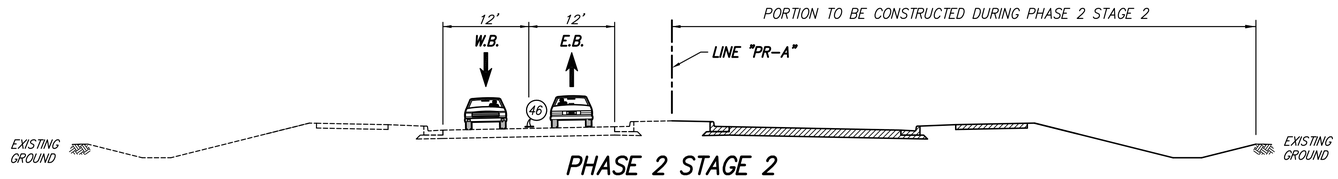

PHASE 2 STAGE 2

FROM COUNTY LINE ROAD TO STA. 109+00 LINE "PR-A"

CONSTRUCTION ZONE DESIGN SPEED = 35 M.P.H.

Scale 1" = 10'

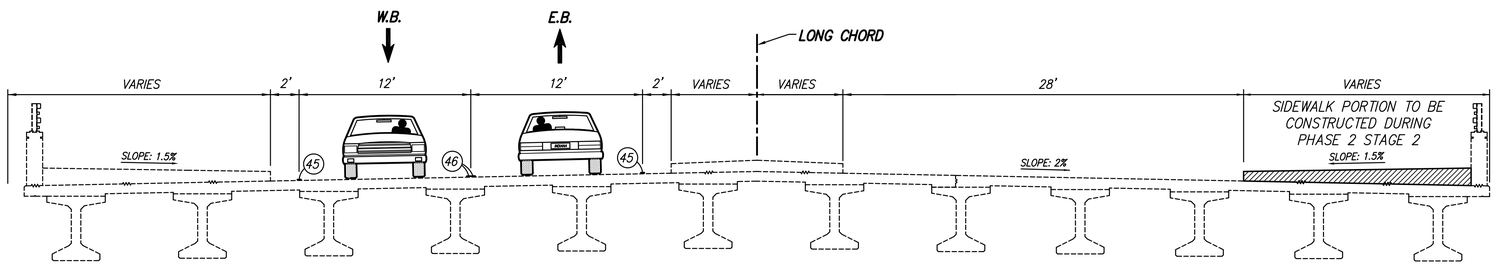

PHASE 2 STAGE 2

BRIDGE OVER LITTLE EAGLE CREEK

CONSTRUCTION ZONE DESIGN SPEED = 35 M.P.H.

Scale 1" = 5'

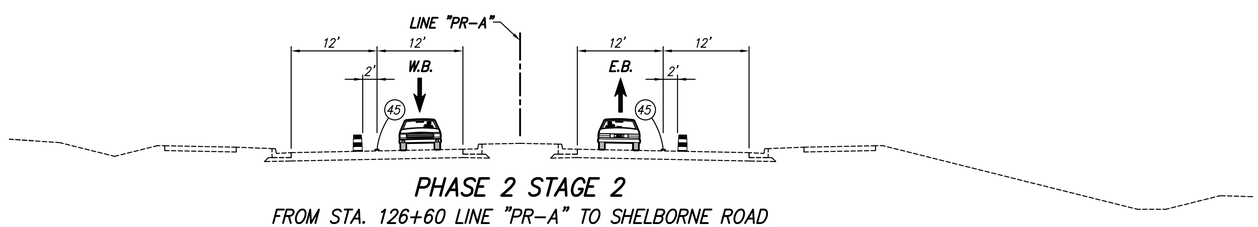

PHASE 2 STAGE 2

FROM STA. 126+60 LINE "PR-A" TO SHELBORNE ROAD

CONSTRUCTION ZONE DESIGN SPEED = 35 M.P.H.

Scale 1" = 10'

TRANSITION EASTBOUND TRAFFIC FROM NEWLY CONSTRUCTED SOUTHERNMOST WESTBOUND LANE TO NEWLY CONSTRUCTED NORTHERNMOST EASTBOUND LANE. TRANSITION WESTBOUND TRAFFIC FROM NEWLY CONSTRUCTED NORTHERNMOST WESTBOUND LANE TO NEWLY CONSTRUCTED SOUTHERNMOST WESTBOUND LANE. TRANSITION LIMITS FROM STATION 124+30 TO STATION 126+60 LINE "PR-A".

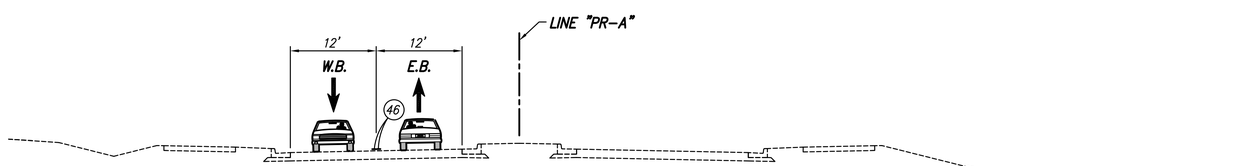

PHASE 2 STAGE 2

FROM STATION 109+00 TO STATION 124+30 LINE "PR-A"

CONSTRUCTION ZONE DESIGN SPEED = 35 M.P.H.

Scale 1" = 10'

LEGEND

- (T) HMA FOR TEMPORARY PAVEMENT, TYPE C, CONSISTING OF:
  220#/SYS HMA SURFACE, TYPE C ON
  440#/SYS HMA BASE, TYPE C ON
  6" COMPACTED AGGREGATE, NO. 53, BASE
- (TC) ASPHALT FOR TACK COAT
- (45) TEMPORARY PAVEMENT MARKING, 4" (WHITE)
- (46) TEMPORARY PAVEMENT MARKING, 4" (YELLOW)
- TRAFFIC FLOW DIRECTION
- STANDARD DRUMS (SEE STANDARD DRAWINGS FOR SPACING)
- AREA TO BE CONSTRUCTED DURING THIS PHASE

MAINTENANCE OF TRAFFIC NOTES

1. FOR MAINTENANCE OF TRAFFIC DETAILS SEE MAINTENANCE OF TRAFFIC PLAN SHEETS.
2. EXISTING PAVEMENT MARKINGS THAT CONFLICT WITH EACH MAINTENANCE OF TRAFFIC SCHEME SHALL BE REMOVED PRIOR TO CONSTRUCTION.
3. WHENEVER POSSIBLE PRIVATE DRIVEWAYS SHALL BE CONSTRUCTED IN PORTIONS TO ALLOW ACCESS TO PROPERTIES AT ALL TIMES. WHENEVER PRIVATE DRIVEWAYS ARE TOO NARROW TO ACCOMMODATE CONTINUOUS ACCESS, THE CONTRACTOR SHALL CONTACT THE PROPERTY OWNER AND WORK OUT A TIME SCHEDULE FOR DRIVEWAY CONSTRUCTION THAT WILL CAUSE THE LEAST INCONVENIENCE TO THE PROPERTY OWNER.
4. STREET APPROACHES ARE TO BE CLOSED TO THROUGH TRAFFIC DURING THEIR CONSTRUCTION. BEFORE ANY CLOSURES ARE MADE, THE CONTRACTOR MUST FIRST CONTACT LOCAL OFFICIALS, POLICE, FIRE, LOCAL SCHOOL OFFICIALS, U.S. POSTAL SERVICE, AND OTHERS AS NECESSARY TO MINIMIZE DISRUPTIONS TO LOCAL SERVICE. NO TWO ADJACENT APPROACHES SHALL BE CLOSED AT THE SAME TIME.
5. UTILIZE FLAGGERS AS NEEDED FOR SHORT DURATIONS. FOR TEMPORARY ADVANCE SIGNING REQUIREMENTS, SEE INDOT STANDARD DRAWINGS.
6. FOR DETAILS AND SPACING OF DETOUR SIGNS, CONSTRUCTION SIGNS AND CHANNELIZATION DEVICES, SEE INDOT STANDARD DRAWINGS.
7. ADVANCE SIGNING TO BE IN PLACE AT BEGINNING AND END OF PROJECT BEFORE PRIOR TO ANY CONSTRUCTION ACTIVITY.

FOR INFORMATION ONLY

Stage 3 Plans

RECOMMENDED FOR APPROVAL _____ DESIGN ENGINEER DATE

DESIGNED: J.L.B. DRAWN: J.L.B

CHECKED: D.W.C. CHECKED: D.W.C.

INDIANA DEPARTMENT OF TRANSPORTATION

MAINTENANCE OF TRAFFIC TYPICAL CROSS SECTIONS

HORIZONTAL SCALE	BRIDGE FILE
AS NOTED	
VERTICAL SCALE	DESIGNATION
	1401701
SURVEY BOOK	SHEETS
	10 of 43
CONTRACT	PROJECT
	1401701

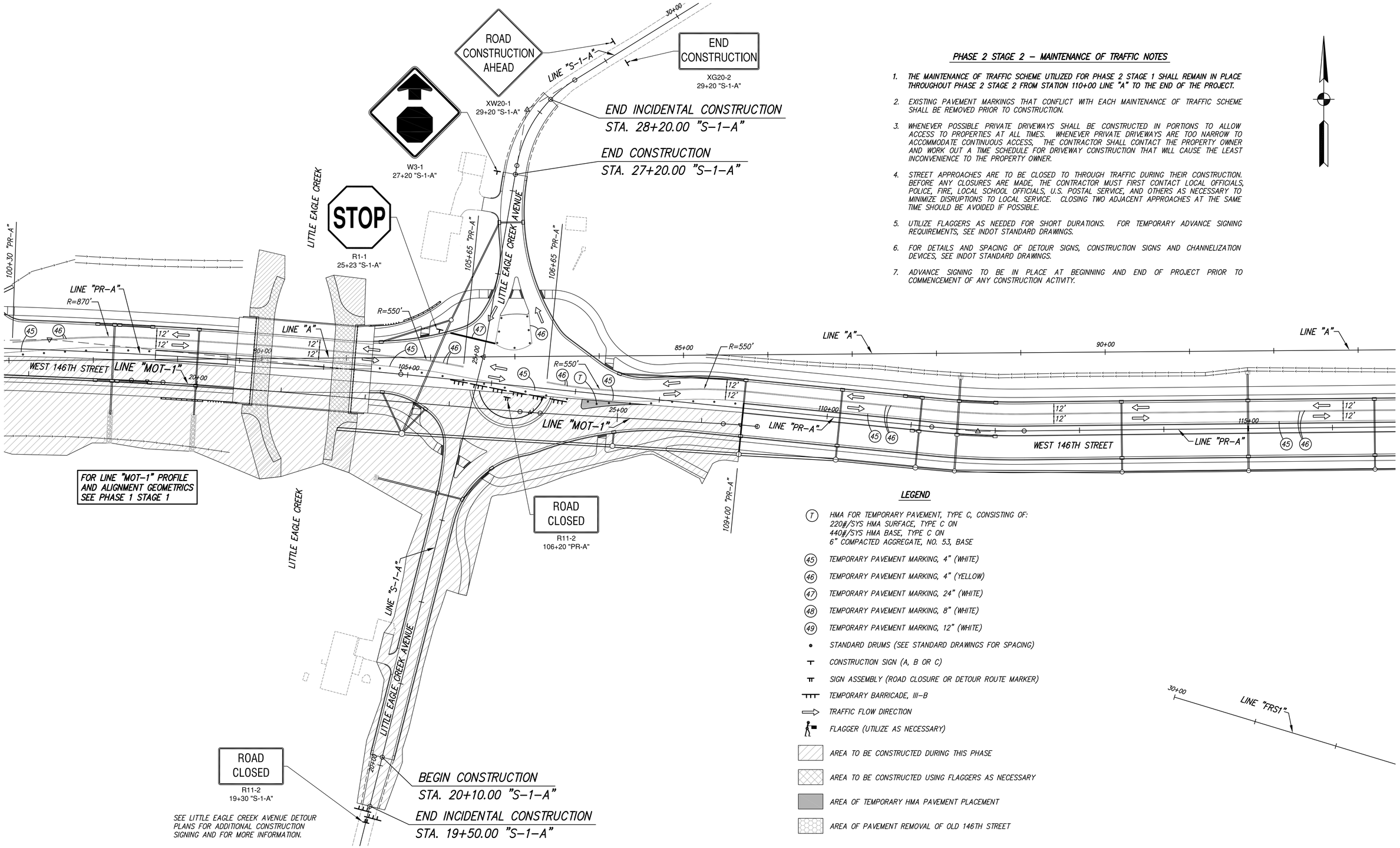

PHASE 2 STAGE 2 – MAINTENANCE OF TRAFFIC NOTES

1. THE MAINTENANCE OF TRAFFIC SCHEME UTILIZED FOR PHASE 2 STAGE 1 SHALL REMAIN IN PLACE THROUGHOUT PHASE 2 STAGE 2 FROM STATION 110+00 LINE "A" TO THE END OF THE PROJECT.
2. EXISTING PAVEMENT MARKINGS THAT CONFLICT WITH EACH MAINTENANCE OF TRAFFIC SCHEME SHALL BE REMOVED PRIOR TO CONSTRUCTION.
3. WHENEVER POSSIBLE PRIVATE DRIVEWAYS SHALL BE CONSTRUCTED IN PORTIONS TO ALLOW ACCESS TO PROPERTIES AT ALL TIMES. WHENEVER PRIVATE DRIVEWAYS ARE TOO NARROW TO ACCOMMODATE CONTINUOUS ACCESS, THE CONTRACTOR SHALL CONTACT THE PROPERTY OWNER AND WORK OUT A TIME SCHEDULE FOR DRIVEWAY CONSTRUCTION THAT WILL CAUSE THE LEAST INCONVENIENCE TO THE PROPERTY OWNER.
4. STREET APPROACHES ARE TO BE CLOSED TO THROUGH TRAFFIC DURING THEIR CONSTRUCTION. BEFORE ANY CLOSURES ARE MADE, THE CONTRACTOR MUST FIRST CONTACT LOCAL OFFICIALS, POLICE, FIRE, LOCAL SCHOOL OFFICIALS, U.S. POSTAL SERVICE, AND OTHERS AS NECESSARY TO MINIMIZE DISRUPTIONS TO LOCAL SERVICE. CLOSING TWO ADJACENT APPROACHES AT THE SAME TIME SHOULD BE AVOIDED IF POSSIBLE.
5. UTILIZE FLAGGERS AS NEEDED FOR SHORT DURATIONS. FOR TEMPORARY ADVANCE SIGNING REQUIREMENTS, SEE INDOT STANDARD DRAWINGS.
6. FOR DETAILS AND SPACING OF DETOUR SIGNS, CONSTRUCTION SIGNS AND CHANNELIZATION DEVICES, SEE INDOT STANDARD DRAWINGS.
7. ADVANCE SIGNING TO BE IN PLACE AT BEGINNING AND END OF PROJECT PRIOR TO COMMENCEMENT OF ANY CONSTRUCTION ACTIVITY.

LEGEND

- (T) HMA FOR TEMPORARY PAVEMENT, TYPE C, CONSISTING OF: 220#/SYS HMA SURFACE, TYPE C ON 440#/SYS HMA BASE, TYPE C ON 6" COMPACTED AGGREGATE, NO. 53, BASE
- (45) TEMPORARY PAVEMENT MARKING, 4" (WHITE)
- (46) TEMPORARY PAVEMENT MARKING, 4" (YELLOW)
- (47) TEMPORARY PAVEMENT MARKING, 24" (WHITE)
- (48) TEMPORARY PAVEMENT MARKING, 8" (WHITE)
- (49) TEMPORARY PAVEMENT MARKING, 12" (WHITE)
- STANDARD DRUMS (SEE STANDARD DRAWINGS FOR SPACING)
- CONSTRUCTION SIGN (A, B OR C)
- SIGN ASSEMBLY (ROAD CLOSURE OR DETOUR ROUTE MARKER)
- TEMPORARY BARRICADE, III–B
- TRAFFIC FLOW DIRECTION
- FLAGGER (UTILIZE AS NECESSARY)
- AREA TO BE CONSTRUCTED DURING THIS PHASE
- AREA TO BE CONSTRUCTED USING FLAGGERS AS NECESSARY
- AREA OF TEMPORARY HMA PAVEMENT PLACEMENT
- AREA OF PAVEMENT REMOVAL OF OLD 146TH STREET

FOR INFORMATION ONLY

Stage 3 Plans

RECOMMENDED FOR APPROVAL _____ DESIGN ENGINEER DATE

DESIGNED: G.S.H. DRAWN: G.S.H.

CHECKED: J.L.B. CHECKED: J.L.B.

INDIANA DEPARTMENT OF TRANSPORTATION

MAINTENANCE OF TRAFFIC
PHASE 2 STAGE 2

HORIZONTAL SCALE	BRIDGE FILE
1" = 50'	
VERTICAL SCALE	DESIGNATION
	1401701
SURVEY BOOK	SHEETS
	11 of 43
CONTRACT	PROJECT
	1401701

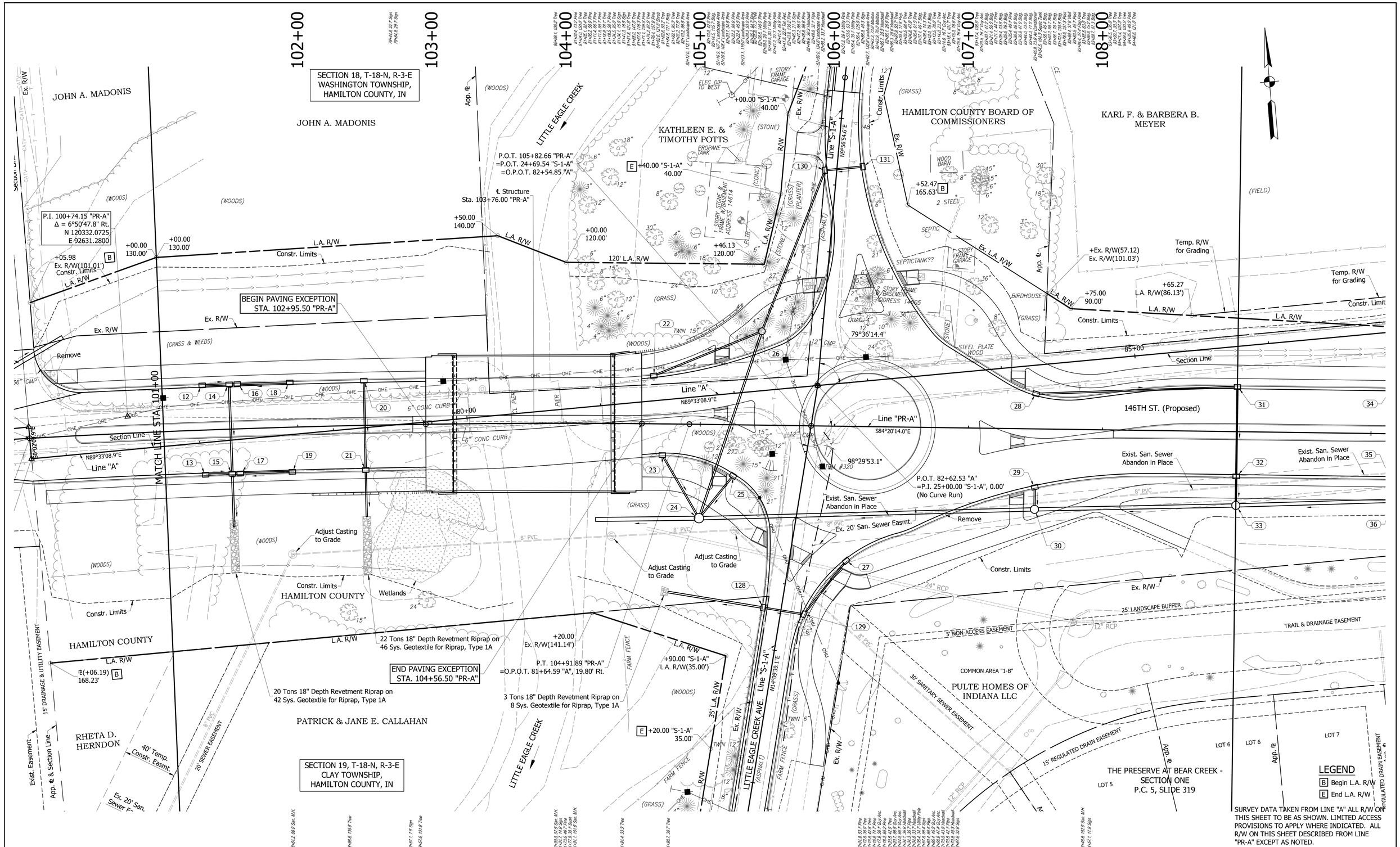

SURVEY DATA TAKEN FROM LINE "A" ALL R/W ON THIS SHEET TO BE AS SHOWN. LIMITED ACCESS PROVISIONS TO APPLY WHERE INDICATED. ALL R/W ON THIS SHEET DESCRIBED FROM LINE "PR-A" EXCEPT AS NOTED.

FOR INFORMATION ONLY

PT. #2001 - P.O.T. 82+62.53 "A"
MNS E SIDE CPOL #BCI579
LITTLE EAGLE CREEK RD.
PKF SE SIDE BRACE POLE
146TH ST
MNS SE SIDE BRACE POLE
N. 120311.320 / E. 93145.751

CPT #5 - 82+82.24, 17.66' Rt. "A"
MNS E SIDE CPOLE # BCI579
LITTLE EAGLECREEK RD.
PKN E SIDE CPOLE NO#
146TH ST
MNS N SIDE STRAIN POLE
RRS NW SIDE PWPREC
N. 120293.811 / E. 93165.598

NOT FOR CONSTRUCTION

INDIANA
DEPARTMENT OF TRANSPORTATION

PLAN
LINE "PR-A"

DESIGNED: JGP	DRAWN: JGP
CHECKED: MPB	CHECKED: MPB

HORIZONTAL SCALE	BRIDGE FILE
1" = 30'	
VERTICAL SCALE	DESIGNATION
1" = 5'	1401701
SURVEY BOOK	SHEETS
	12 of 43
CONTRACT	PROJECT
R-38073	1401701

S:\2001Proj\2007-162\Plans\Road Plans\07-Plans and Profiles\USI CSD-146th-Pleo-Prof.dwg, Sheet - (02), 4/11/2019 12:56:57 PM

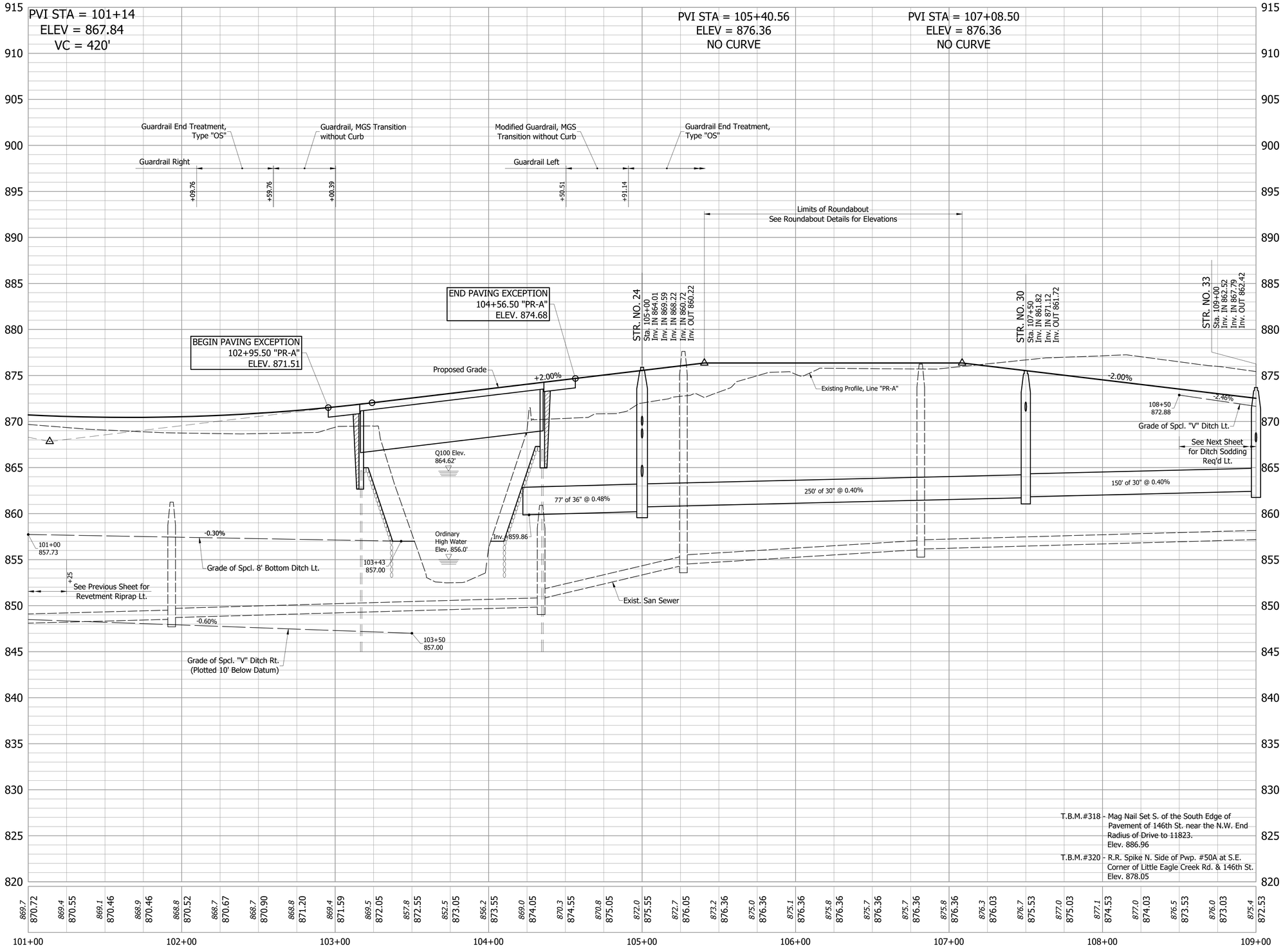

FOR INFORMATION ONLY

NOT FOR CONSTRUCTION

DESIGNED: JGP	DRAWN: JGP
CHECKED: MPB	CHECKED: MPB

INDIANA
DEPARTMENT OF TRANSPORTATION

PROFILE
LINE "PR-A"

HORIZONTAL SCALE	BRIDGE FILE
1" = 30'	
VERTICAL SCALE	DESIGNATION
1" = 5'	1401701
SURVEY BOOK	SHEETS
	13 of 43
CONTRACT	PROJECT
R-38073	1401701

S:\2007Proj\2007-162\Plans\Road Plans\07-Plans and Profiles\US-CSD-146th-Plan-Prof.dwg, Profile-02, 4/11/2019 12:51:38 PM

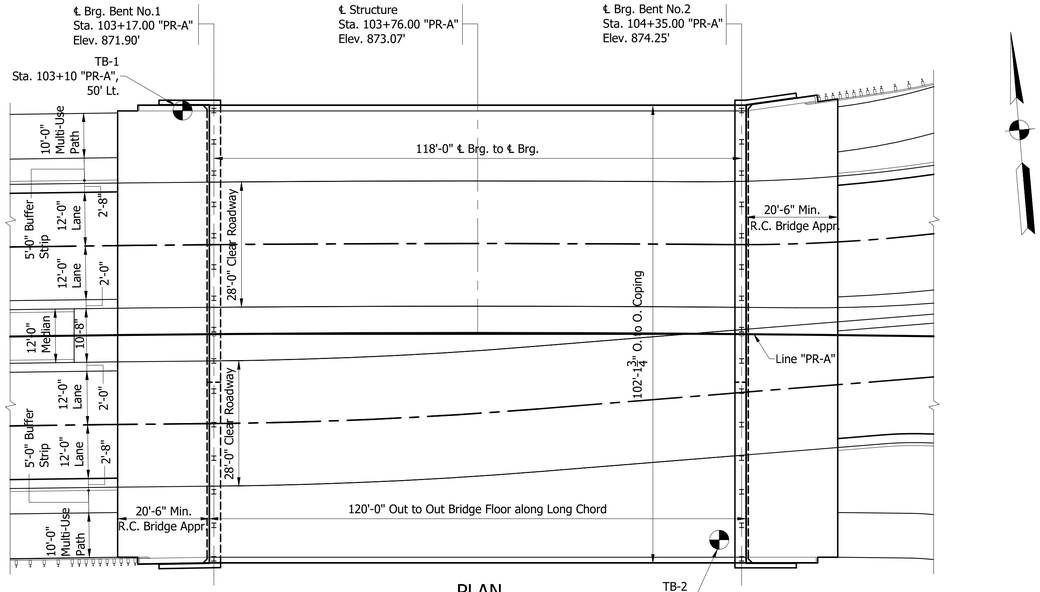

PLAN

Scale: 1/16"=1'-0"

SUMMARY OF STATIC AND DRIVING RESISTANCES

	BENT NO. 1	BENT NO. 4
PILE SIZE, TYPE AND GRADE	HP12 X 74 STEEL "H" PILES	
FACTORED DESIGN SOIL RESISTANCE, Rr (kip)	256	256
RESISTANCE FACTOR Φ dyn	0.55	0.55
DOWNDRAG LOAD, DD (kips)	0	0
NOMINAL SOIL RESISTANCE, Rn (kips)	467	467
DOWNDRAG FRICTION, Rsdd (kips)	0	0
SCOUR ZONE FRICTION, Rs scour (kips)	0	0
NOMINAL DRIVING RESISTANCE, Rndr (kips)	467	467
ESTIMATED PILE TIP ELEVATION	812.0'	812.0'
TESTING METHOD	INDOT Std. Spec. 701.05(a)	

LOG OF TEST BORING

EARTH EXPLORATION

CLIENT: United Consulting
DES NO.: 1401701 STRUCTURE #: ---
PROJECT TYPE: Roadway Reconstruction
LOCATION: 146th Street - Phase IV
COUNTY: Hamilton PROJECT NO.: CJ175612

BORING NO.: TB-1
SHEET 1 OF 3
NORTHING: 1730808
EASTING: 167480
DATUM: NAVD88
DATE STARTED: 11-27-18
DATE COMPLETED: 11-27-18

ELEVATION: 860.0
STATION: 103+10
OFFSET: 50.0 ft Left
LINE: PR-A
DEPTH: 90.0 ft

BORING METHOD: Hollow Stem Auger
RIG TYPE: CME 750 ATV
CASING DIA.: ---
CORE SIZE: ---

HAMMER: Auto
DRILLER/INSP: J.S.
TEMPERATURE: 24 °F
WEATHER: Cloudy

GROUNDWATER: Encountered at 8.5 ft; At completion 37.0 ft; Caved in at 41.0 ft

ELEVATION	SAMPLE DEPTH	SOIL/MATERIAL DESCRIPTION	SAMPLE NUMBER	SPT per 6"	% RECOVERY	MOISTURE CONTENT	DRY DENSITY, pcf	POCKET PEN., tsf	UNCONF. COMP., tsf	ATTERBERG LIMITS LL	PL	PI	REMARKS
		Topsoil 1.0											
	2.5	**Loam,** medium stiff, moist, brown, A-4, Lab No. 24813 3.0	SS 1	3-3-4	67	25.6		<0.25					
855.0	5.0	**Sand,** very loose, wet, brown and gray, (visual) 6.0	SS 2	2-2-2	67								
	7.5		SS 3	2-4-8	100	12.9		2.75					
850.0	10.0		SS 4	3-6-9	100	12.5	126.7	2.5	3.92				
	12.5		SS 5	4-6-6	100	13.4		4.25					
845.0	15.0		SS 6	5-6-11	100	12.4	121.7	>4.5	4.91				
	17.5	**Loam,** stiff to hard, moist, brown and gray, A-4, Lab No. 25064	SS 7	6-6-8	100	12.6		>4.5					
840.0	20.0		SS 8	6-8-9	100	12.2	124.2	>4.5	5.81				
	22.5												
835.0	25.0		SS 9	7-10-9	100	12.7		4.25					
	27.5												
830.0	30.0		SS 10	6-10-11	89	11.3		3.5					

Continued on next page

EEI BORING LOG INDOT FORMAT1 CJ175612.GPJ IN_DOT1.GDT 2/21/19

LOG OF TEST BORING

EARTH EXPLORATION

CLIENT: United Consulting
DES NO.: 1401701 STRUCTURE #: ---
PROJECT TYPE: Roadway Reconstruction

BORING NO.: TB-1
SHEET 2 OF 3
NORTHING: 1730808
EASTING: 167480
DATUM: NAVD88

ELEVATION	SAMPLE DEPTH	SOIL/MATERIAL DESCRIPTION	SAMPLE NUMBER	SPT per 6"	% RECOVERY	MOISTURE CONTENT	DRY DENSITY, pcf	POCKET PEN., tsf	UNCONF. COMP., tsf	ATTERBERG LIMITS LL	PL	PI	REMARKS
	32.5												
825.0	35.0		SS 11	5-9-11	100	11.3	121.8	>4.5	7.43				
	37.5												
820.0	40.0		SS 12	5-11-13	100	11.6		>4.5					
	42.5												
815.0	45.0		SS 13	6-9-12	100	12.7		>4.5					
	47.5	**Loam,** stiff to hard, moist, brown and gray, A-4, Lab No. 25064											
810.0	50.0		SS 14	6-8-11	100	12.5		4.0					
	52.5												
805.0	55.0		SS 15	6-7-14	100	12.0	125.7	>4.5	8.15				
	57.5												
800.0	60.0		SS 16	8-15-23	100	16.7		>4.5					
	62.5												
795.0	65.0		SS 17	7-14-16	100	16.8		>4.5					

Continued on next page

EEI BORING LOG INDOT FORMAT1 CJ175612.GPJ IN_DOT1.GDT 2/21/19

LOG OF TEST BORING

EARTH EXPLORATION

CLIENT: United Consulting
DES NO.: 1401701 STRUCTURE #: ---
PROJECT TYPE: Roadway Reconstruction

BORING NO.: TB-1
SHEET 3 OF 3
NORTHING: 1730808
EASTING: 167480
DATUM: NAVD88

ELEVATION	SAMPLE DEPTH	SOIL/MATERIAL DESCRIPTION	SAMPLE NUMBER	SPT per 6"	% RECOVERY	MOISTURE CONTENT	DRY DENSITY, pcf	POCKET PEN., tsf	UNCONF. COMP., tsf	ATTERBERG LIMITS LL	PL	PI	REMARKS
	67.5												
790.0	70.0		SS 18	25-32-50/1	98	17.9	111.4	4.5	4.98				
	72.5												
785.0	75.0		SS 19	33-45-48	100	9.9		>4.5					
	77.5	**Loam,** stiff to hard, moist, brown and gray, A-4, Lab No. 25064											
780.0	80.0		SS 20	42-50/3	94	10.4	132.4	>4.5	6.92				
	82.5												
775.0	85.0		SS 21	38-35	100	15.1		>4.5					
	87.5												
770.0	90.0	90.0	SS 22	35-50/2	95	7.6		>4.5					
	92.5	Bottom of Boring at 90.0 ft											
765.0	95.0												
	97.5												
760.0	100.0												
	102.5												

EEI BORING LOG INDOT FORMAT1 CJ175612.GPJ IN_DOT1.GDT 2/21/19

NOT FOR CONSTRUCTION

DESIGNED: BLM DRAWN: DWB
CHECKED: MJH CHECKED: BLM

INDIANA
DEPARTMENT OF TRANSPORTATION

SOIL BORINGS

HORIZONTAL SCALE	BRIDGE FILE
AS NOTED	HAMILTON 29
VERTICAL SCALE	DESIGNATION
AS NOTED	0902302

SURVEY BOOK	SHEETS
----	14 of 43
CONTRACT	PROJECT
R-38073	1401701

S:\2003Proj\0903142\Plans\Bridge Plans\07-142 Soil Borings.dwg, Soil Boring 01, 4/11/2019 1:01:53 PM

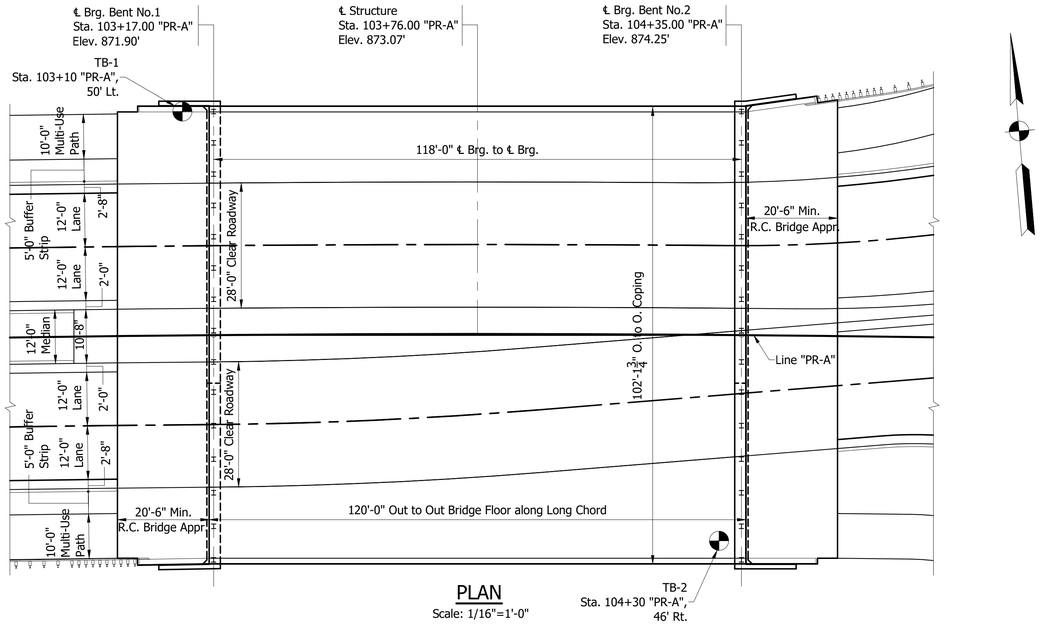

PLAN

Scale: 1/16"=1'-0"

LOG OF TEST BORING

BORING NO.: TB-2
SHEET 1 OF 3
NORTHING: 1730702
EASTING: 167592
DATUM: NAVD88
DATE STARTED: 11-26-18
DATE COMPLETED: 11-27-18

CLIENT: United Consulting
DES NO.: 1401701 STRUCTURE #: ---
PROJECT TYPE: Roadway Reconstruction
LOCATION: 146th Street - Phase IV
COUNTY: Hamilton PROJECT NO.: CJ175612

ELEVATION: 860.0
STATION: 104+30
OFFSET: 46.0 ft Right
LINE: PR-A'
DEPTH: 90.0 ft

BORING METHOD: Hollow Stem Auger
RIG TYPE: CME 750 ATV
CASING DIA.: ---
CORE SIZE: ---

HAMMER: Auto
DRILLER/INSP: J.S.
TEMPERATURE: 34 °F
WEATHER: Cloudy

GROUNDWATER: Encountered at 8.5 ft; At completion 43.0 ft; 42.0 ft After 24 hr; Caved in at 47.0 ft

ELEVATION	SAMPLE DEPTH	SOIL/MATERIAL DESCRIPTION	SAMPLE NUMBER	SPT per 6"	% RECOVERY	MOISTURE CONTENT	DRY DENSITY, pcf	POCKET PEN., tsf	UNCONF. COMP., tsf	ATTERBERG LIMITS LL	PL	PI	REMARKS
	1.0	**Topsoil**											
	2.5		SS 1	2-2-3	100	26.0		0.5		26	16	10	
855.0	5.0	**Loam,** very soft to very stiff, moist, brown, with sand seam near 7 ft, A-4(3), Lab No. 24813	SS 2	1-1-2	100	26.0		0.25					
	7.5		SS 3	1-5-12	100	26.0		<0.25					
	8.0												
850.0	10.0		SS 4	6-6-8	100	12.2		>4.5					
	12.5		SS 5	5-8-14	100	12.4	125.7	3.25	4.22				
845.0	15.0		SS 6	4-8-10	100	13.7		4.25					
	17.5		SS 7	4-7-12	100	13.2		>4.5					
840.0	20.0	**Loam,** stiff to hard, moist, brown, with cobbles from 65 ft to 80 ft, A-4, Lab No. 25064	SS 8	4-6-8	100	12.9	125.3	3.25	4.59				
	22.5												
835.0	25.0		SS 9	5-8-10	100	12.8		>4.5					
	27.5												
830.0	30.0		SS 10	5-9-13	100	14.6		>4.5					

Continued on next page

EEI BORING LOG (INDOT FORMAT) CJ175612.GPJ IN_DOT1.GDT 2/21/19

LOG OF TEST BORING

BORING NO.: TB-2
SHEET 2 OF 3
NORTHING: 1730702
EASTING: 167592
DATUM: NAVD88

CLIENT: United Consulting
DES NO.: 1401701 STRUCTURE #: ---
PROJECT TYPE: Roadway Reconstruction

ELEVATION	SAMPLE DEPTH	SOIL/MATERIAL DESCRIPTION	SAMPLE NUMBER	SPT per 6"	% RECOVERY	MOISTURE CONTENT	DRY DENSITY, pcf	POCKET PEN., tsf	UNCONF. COMP., tsf	ATTERBERG LIMITS LL	PL	PI	REMARKS
	32.5												
825.0	35.0		SS 11	13-15-25	100	14.6		>4.5					
	37.5												
820.0	40.0		SS 12	22-50/1	97	8.2		>4.5					
	42.5												
815.0	45.0		SS 13	6-12-23	89	13.3	120.4	>4.5	7.85				
	47.5	**Loam,** stiff to hard, moist, brown, with cobbles from 65 ft to 80 ft, A-4, Lab No. 25064											
810.0	50.0		SS 14	13-12-14	100	13.7		>4.5					
	52.5												
805.0	55.0		SS 15	10-13-15	100	14.6		2.25					
	57.5												
800.0	60.0		SS 16	8-10-16	100	18.1		3.0					
	62.5												
795.0	65.0		SS 17	7-8-9	100	14.8		2.0					

Continued on next page

EEI BORING LOG (INDOT FORMAT) CJ175612.GPJ IN_DOT1.GDT 2/21/19

LOG OF TEST BORING

BORING NO.: TB-2
SHEET 3 OF 3
NORTHING: 1730702
EASTING: 167592
DATUM: NAVD88

CLIENT: United Consulting
DES NO.: 1401701 STRUCTURE #: ---
PROJECT TYPE: Roadway Reconstruction

ELEVATION	SAMPLE DEPTH	SOIL/MATERIAL DESCRIPTION	SAMPLE NUMBER	SPT per 6"	% RECOVERY	MOISTURE CONTENT	DRY DENSITY, pcf	POCKET PEN., tsf	UNCONF. COMP., tsf	ATTERBERG LIMITS LL	PL	PI	REMARKS
	67.5												
790.0	70.0		SS 18	9-12-35	89	10.5		3.0					
	72.5												
785.0	75.0		SS 19	15-50/2	95	11.6		2.25					
	77.5	**Loam,** stiff to hard, moist, brown, with cobbles from 65 ft to 80 ft, A-4, Lab No. 25064											
780.0	80.0		SS 20	50/3	0								
	82.5												
775.0	85.0		SS 21	10-12-18	100	12.1		1.25					
	87.5												
770.0	90.0		SS 22	9-11-16	100	12.8		1.75					
		Bottom of Boring at 90.0 ft											
	92.5												
765.0	95.0												
	97.5												
760.0	100.0												
	102.5												

EEI BORING LOG (INDOT FORMAT) CJ175612.GPJ IN_DOT1.GDT 2/21/19

NOT FOR CONSTRUCTION

DESIGNED: BLM DRAWN: DWB
CHECKED: MJH CHECKED: BLM

INDIANA
DEPARTMENT OF TRANSPORTATION

SOIL BORINGS

HORIZONTAL SCALE	BRIDGE FILE
AS NOTED	HAMILTON 29
VERTICAL SCALE	DESIGNATION
AS NOTED	0902302

SURVEY BOOK	SHEETS
----	15 of 43
CONTRACT	PROJECT
R-38073	1401701

S:\2007Proj\2007-142\Plans\Bridge Plans\07-142 Soil Borings.dwg, Soil Boring 02, 4/11/2019 12:57:33 PM

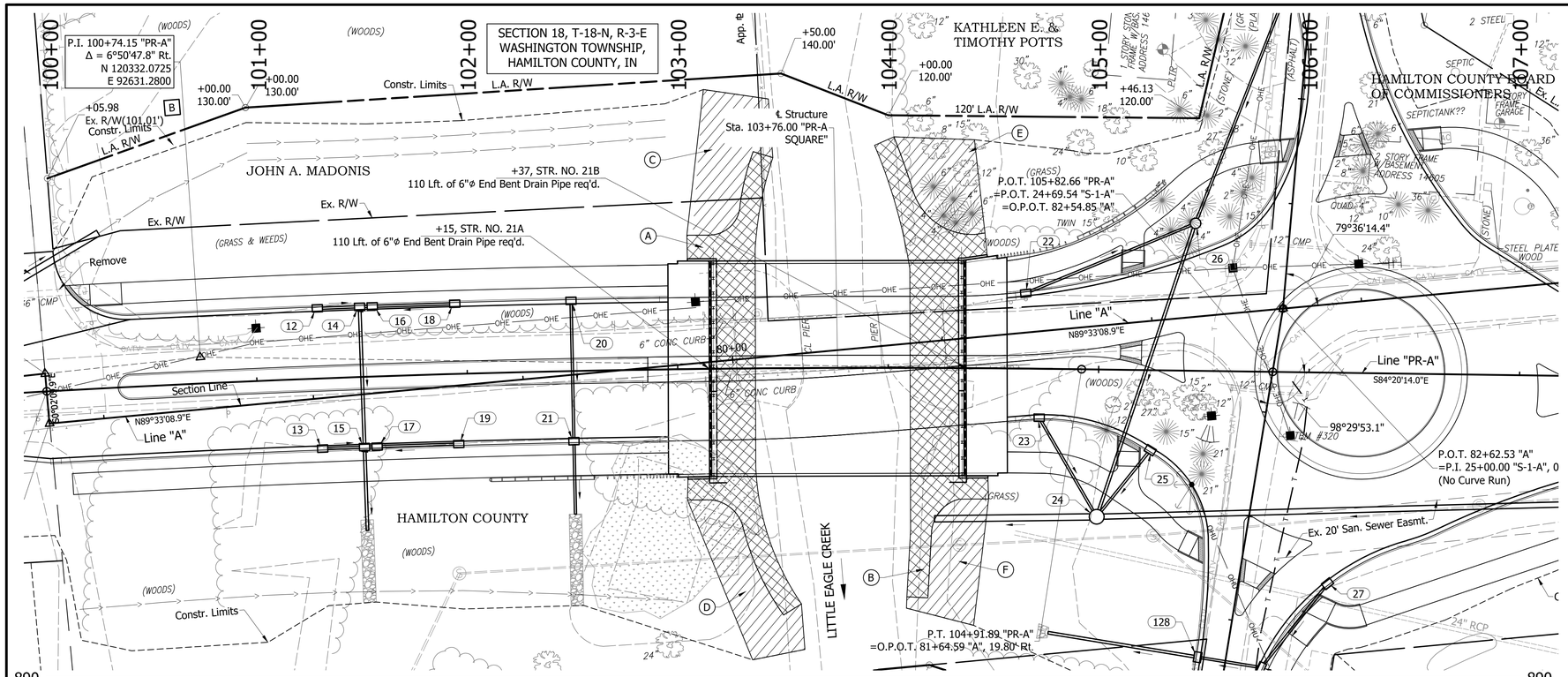

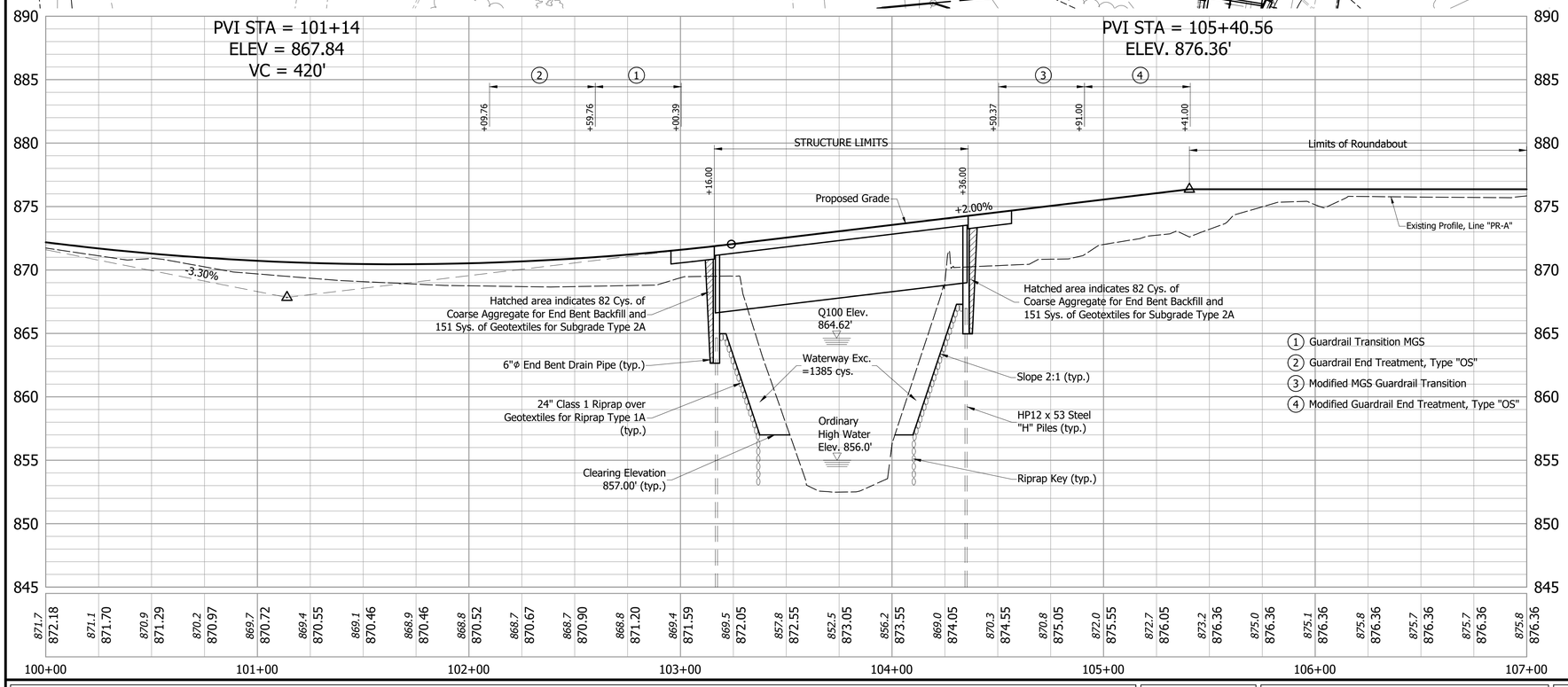

SURVEY DATA TAKEN FROM LINE "A" ALL R/W ON THIS SHEET TO BE AS SHOWN. LIMITED ACCESS PROVISIONS TO APPLY WHERE INDICATED. ALL R/W ON THIS SHEET DESCRIBED FROM LINE "PR-A" EXCEPT AS NOTED.

LEGEND

- (A) Cross Hatched area Indicates 551 tons of Class I Riprap over 601 sys. of Geotextiles for Riprap Type 1A
- (B) Cross Hatched area Indicates 605 tons of Class I Riprap over 678 sys. of Geotextiles for Riprap Type 1A
- (C) Hatched area Indicates 232 sys. of Erosion Control Blankets and Seeding "R"
- (D) Hatched area Indicates 211 sys. of Erosion Control Blankets and Seeding "R"
- (E) Hatched area Indicates 174 sys. of Erosion Control Blankets and Seeding "R"
- (F) Hatched area Indicates 176 sys. of Erosion Control Blankets and Seeding "R"

HYDRAULIC DATA

Drainage Area:	23.3 sq. miles
Q100 Discharge:	7300 c.f.s.
Q100 Natural Water Surface Elevation:	864.58 ft.

DESCRIPTION

Existing Q100 Backwater:	0.99 ft.
Existing Q100 Headwater Elevation:	866.66 ft.
Existing Gross Waterway Opening Below Q100:	738.48 sq. ft.
Existing Road Overflow Waterway Area:	0.00 sq. ft.
Existing Q100 Velocity:	10.58 ft./s.
Existing Min. Low Structure Elevation:	867.83 ft.
Existing Skew:	0 degrees
Existing Freeboard:	3.25 ft.
Proposed Q100 Backwater:	1.87 ft.
Proposed Q100 Headwater Elevation:	865.54 ft.
Proposed Gross Waterway Opening Below Q100:	912.13 sq. ft.
Proposed Road Overflow Waterway Area:	0.00 sq. ft.
Proposed Q100 Velocity:	8.1 ft./s.
Proposed Min. Low Structure Elevation:	865.37 ft.
Proposed Skew:	0 degrees
Proposed Freeboard:	0.79 ft.

SUMMARY OF SCOUR DATA:

Proposed Flowline Elevation:	852.61 ft.
Proposed Q100 Scour Max Velocity:	9.59 ft./s.
Proposed Q100 Contraction Scour Depth:	13.77 ft.
Proposed Q100 Pier Scour Depth:	0 ft.
Proposed Q100 Total Scour:	13.77 ft.
Proposed Q100 Low Scour Elevation:	838.84 ft.
Proposed Q500 Discharge:	9700 ft./s.
Proposed Q500 Natural Water Surface:	864.82 ft.
Proposed Q500 Maximum Velocity:	11.74 ft./s.
Proposed Q500 Contraction Scour Depth:	20.18 ft.
Proposed Q500 Pier Scour Depth:	0 ft.
Proposed Q500 Total Scour:	20.18 ft.
Proposed Q500 Low Scour Elevation:	832.43 ft.

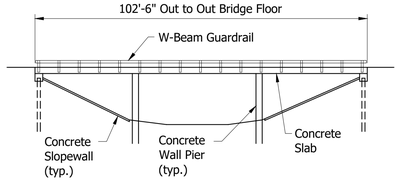

EXISTING STRUCTURE

The existing bridge is a 3 span continuous cast in place reinforced concrete structure with flat slab and 2:1 spill through side slope. The bridge has an overall length of 102'-6" with a clear roadway width of 21'-0". The existing structure is to be removed.

PRESTRESSED CONCRETE BULB-TEE BEAM BRIDGE

ONE SPAN @ 118-0", SQUARE,
2 @ 28'-0" CLEAR ROADWAY WIDTH
W. 146TH STREET OVER LITTLE EAGLE CREEK
HAMILTON COUNTY, INDIANA

NOT FOR CONSTRUCTION

DESIGNED: MKT | DRAWN: DWB
CHECKED: MJH | CHECKED: MJH

INDIANA
DEPARTMENT OF TRANSPORTATION

BRIDGE LAYOUT

HORIZONTAL SCALE	BRIDGE FILE
1"=30'	HAMILTON 29
VERTICAL SCALE	DESIGNATION
1"=5'	0902302
SURVEY BOOK	SHEETS
----	16 of 43
CONTRACT	PROJECT
R-38073	1401701

S:\2020Proj\2007-162\Plans\Bridge Plans\07-162 Layout.dwg, Bridge Layout, 4/17/2019 1:16:15 PM

STRUCTURE TO BE BUILT TO A 420' VERTICAL CURVE AND A +2.00% GRADE

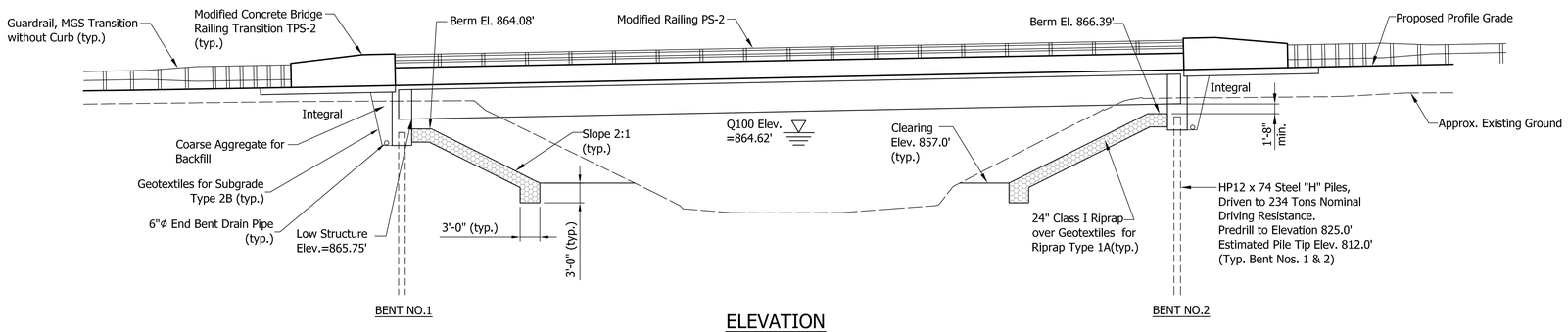

ELEVATION

Scale: 3/32"=1'-0"

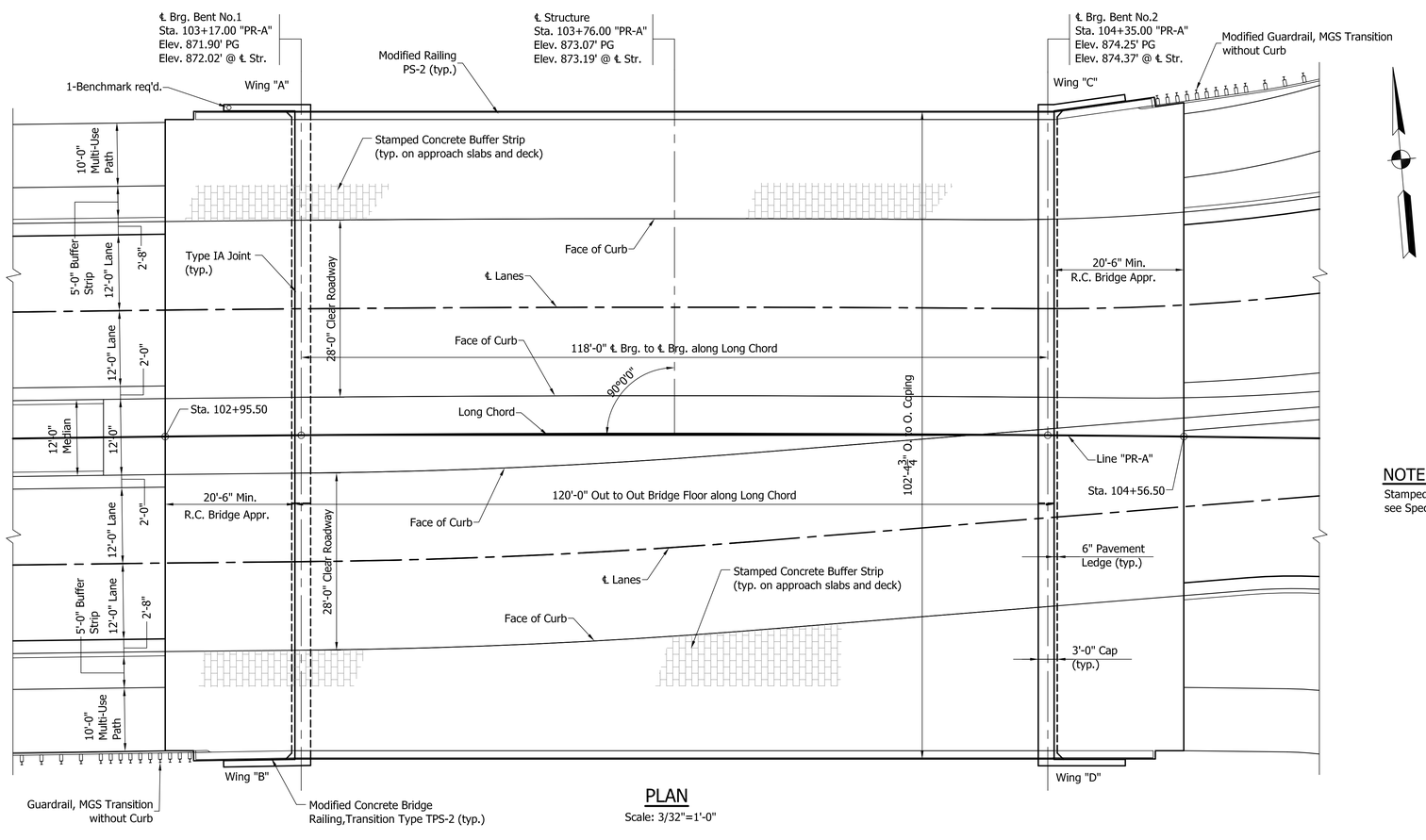

PLAN

Scale: 3/32"=1'-0"

GENERAL NOTES:

All dimensions are in feet and inches and all elevations are in feet unless otherwise noted.

Reinforcing steel covering to be 2.5" in top and 1" min. in bottom of floor slabs, 3" in footings except bottom steel to be 4", and 2" in all other parts, unless noted.

Concrete in end bents, floor slab and wingwalls is to be Class "C".

Surface Seal exposed surfaces of wingwalls, face of deck coping, underside of bridge floor from coping to face of outside beams, all faces of concrete barrirer railing, bridge deck and approach slabs. Estimated Quantity = 19,397 Sft.

DESIGN DATA

Superstructure and Substructure designed for HL-93 loading, in accordance with AASHTO LRFD Bridge Design Specifications, 6th Edition, 2012, and its subsequent interims.

Designed for actual dead load plus 35#/sft. future wearing surface, and 15#/sft. additional to permit use of Permanent Metal Deck Forms.

Slab designed with 1/2" wearing surface.

UNIT STRESSES:
Class "C" Concrete F'c = 4000 p.s.i.
Class "A" Concrete F'c = 3500 p.s.i.
Reinforcing Steel (Grade 60) Fy = 60,000 p.s.i.

SEISMIC DESIGN DATA

Seismic Performance Zone	Zone 2
Acceleration Coefficient	S_{D1}=0.117
Seismic Soil Profile Type	Class D

CONSTRUCTION LOADING

The exterior beam has been checked for strength, deflection, and overturning using the construction loads shown below. Cantilever overhang brackets were assumed for support of the deck overhang past the edge of the exterior beam. The finishing machine was assumed to be supported 6 inches outside the vertical coping form. The top overhang brackets were assumed to be located 6 inches past the edge of vertical coping form. The bottom overhang brackets were assumed to be braced against the intersection of the beam bottom flange web.

Deck Falsework Loads:
Designed for the 15 lb/sft for permanent metal stay-in-place deck forms, removable deck forms, and 2 feet exterior walkway.

Construction Live Load:
Designed for the 20 lb/sft extending 2 feet past the edge of coping and 75 lb/ft vertical force applied at a distance of 6 inch outside the face of coping over a 30 feet length of the deck centered with the finishing machine.

Finishing Machine Load: 4500 lb. distributed over 10 feet along coping.

Wind Load:
Designed for 70 mph horizontal wind loading in accordance with LRFD 3.8.1.

NOTE:

Stamped Concrete to be Brick pattern, see Special Provisions

PRESTRESSED CONCRETE BULB-TEE BEAM BRIDGE

ONE SPAN @ 118-0", SQUARE,
2 @ 28'-0" CLEAR ROADWAY WIDTH
W. 146TH STREET OVER LITTLE EAGLE CREEK
HAMILTON COUNTY, INDIANA

NOT FOR CONSTRUCTION

DESIGNED: MKT	DRAWN: DWB
CHECKED: MJH	CHECKED: MJH

INDIANA
DEPARTMENT OF TRANSPORTATION

GENERAL PLAN

HORIZONTAL SCALE	BRIDGE FILE
AS NOTED	HAMILTON 29
VERTICAL SCALE	DESIGNATION
AS NOTED	0902302
SURVEY BOOK	SHEETS
----	17 of 43
CONTRACT	PROJECT
R-38073	1401701

S:\2007Proj\2007-152\Plans\Bridge Plans\07-152 General Plan.dwg, General Plan 01, 4/18/2019 12:29:50 PM

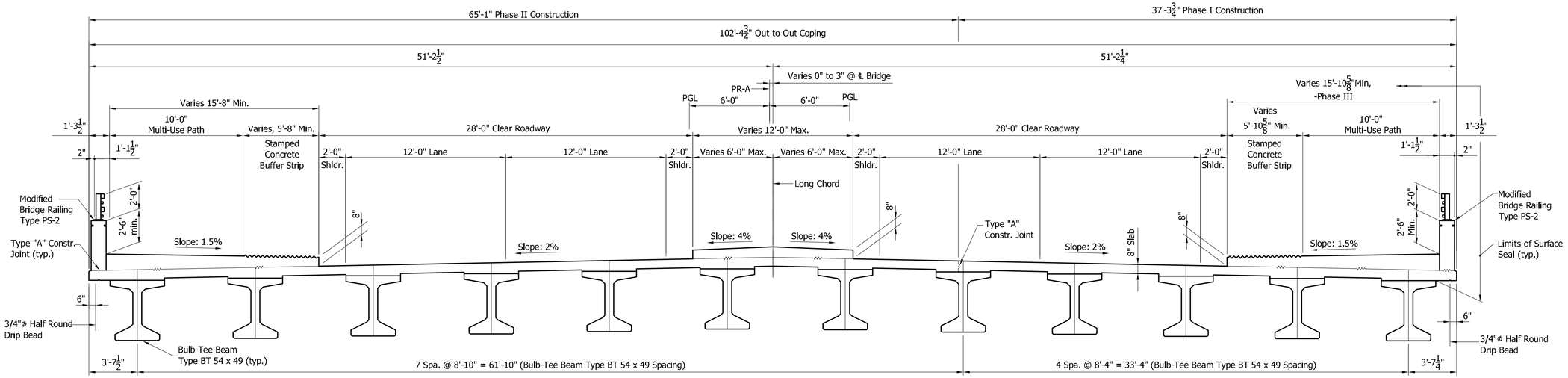

TYPICAL BRIDGE SECTION

Scale: 1/4"=1'-0"

PRESTRESSED CONCRETE BULB-TEE BEAM BRIDGE

ONE SPAN @ 118-0", SQUARE,
2 @ 28'-0" CLEAR ROADWAY WIDTH
W. 146TH STREET OVER LITTLE EAGLE CREEK
HAMILTON COUNTY, INDIANA

NOT FOR CONSTRUCTION

DESIGNED: MKT | DRAWN: DWB
CHECKED: MJH | CHECKED: MJH

INDIANA
DEPARTMENT OF TRANSPORTATION

GENERAL PLAN

HORIZONTAL SCALE	BRIDGE FILE
AS NOTED	HAMILTON 29
VERTICAL SCALE	DESIGNATION
AS NOTED	0902302

SURVEY BOOK	SHEETS		
----	18	of	43
CONTRACT	PROJECT		
R-38073	1401701		

S:\2007Proj\2007-1429\Plans\Bridge Plans\07-1429 General Plan.dwg, General Plan 02, 4/19/2019 9:42:15 AM

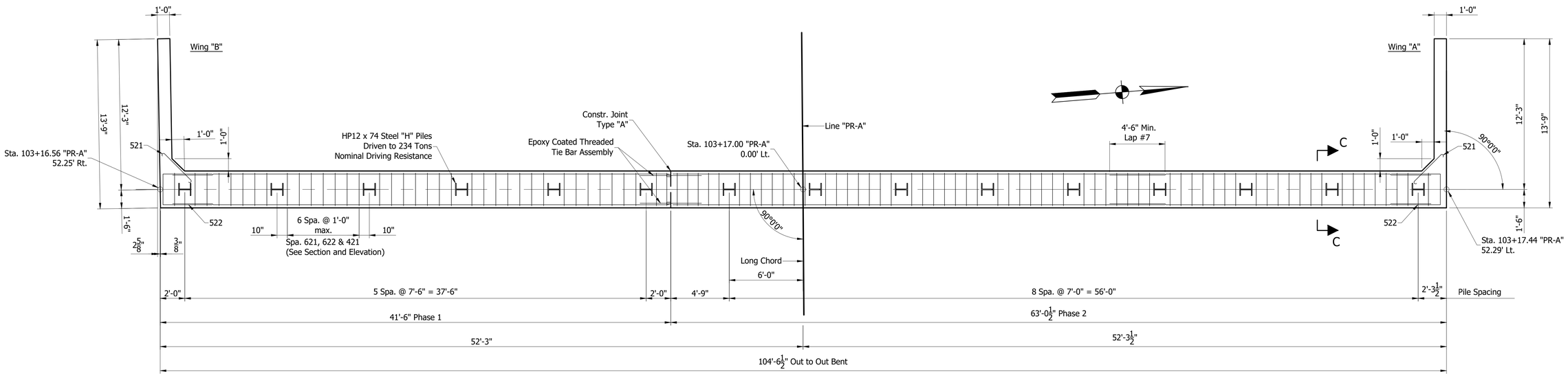

BENT NO.1 - PILE PLAN

Scale: 1/4"=1'-0"

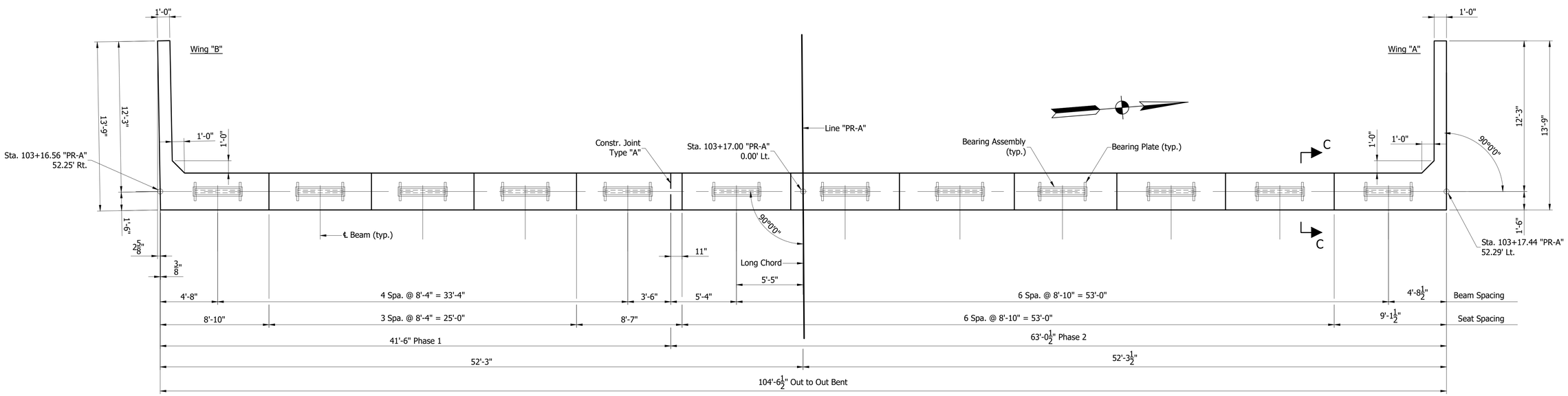

BENT NO.1 - CAP PLAN

Scale: 1/4"=1'-0"

NOTES:

All Reinforcing Steel to be Epoxy Coated in End Bents.

For General Notes, see Sheet No. 17

For Reinforcing Bar Notes, see Standard Dwg. E703-BRST-01.

For additional End Bent Details, see Sheet Nos. 20, 21, 22 & 23.

NOT FOR CONSTRUCTION

DESIGNED: BLM	DRAWN: DWB
CHECKED: MJH	CHECKED: BLM

INDIANA
DEPARTMENT OF TRANSPORTATION

END BENT DETAILS

HORIZONTAL SCALE	BRIDGE FILE
AS NOTED	HAMILTON 29
VERTICAL SCALE	DESIGNATION
AS NOTED	0902302
SURVEY BOOK	SHEETS
----	19 of 43
CONTRACT	PROJECT
R-38073	1401701

S:\2007Proj\2007-162\Plans\Bridge Plans\07-162 End Bents.dwg, End Bent 01, 4/11/2019 1:52:56 PM

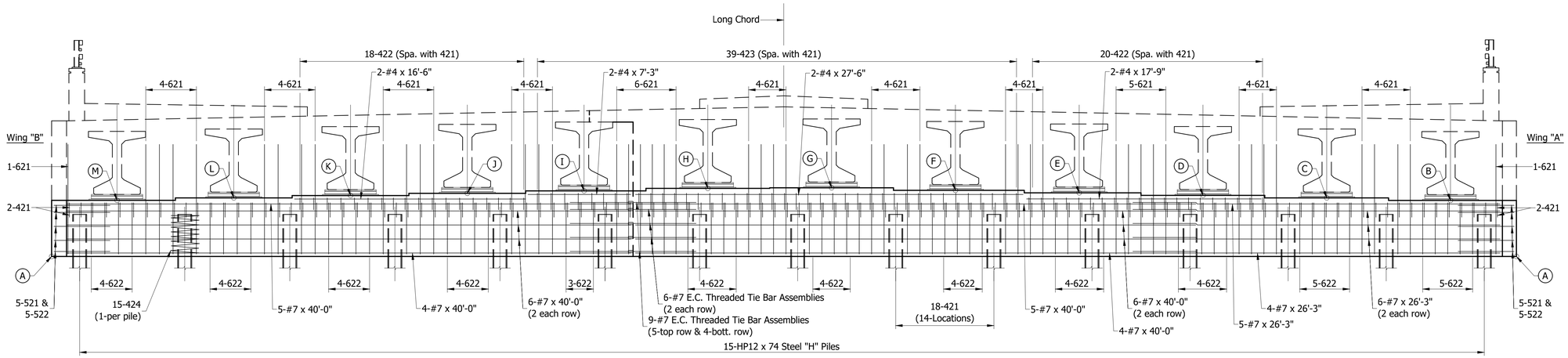

BENT NO.1 - ELEVATION

Scale: 1/4"=1'-0"

TABLE OF ELEVATIONS	
POINT	BENT NO.1
A	861.33'
B	865.34'
C	865.51'
D	865.69'
E	865.87'
F	866.04'
G	866.22'
H	866.17'
I	865.99'
J	865.83'
K	865.66'
L	865.49'
M	865.33'
Top of Piles	864.33'

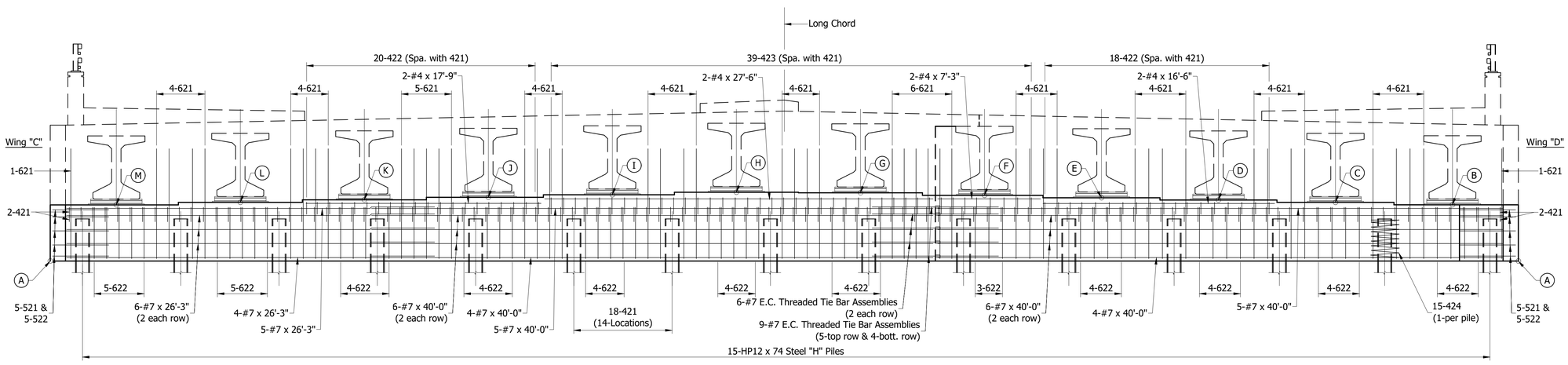

BENT NO.2 - ELEVATION

Scale: 1/4"=1'-0"

TABLE OF ELEVATIONS	
POINT	BENT NO.2
A	863.68'
B	867.70'
C	867.86'
D	868.03'
E	868.19'
F	868.35'
G	868.53'
H	868.57'
I	868.39'
J	868.22'
K	868.04'
L	867.85'
M	867.68'
Top of Piles	866.68'

NOTES:

All Reinforcing Steel to be Epoxy Coated in End Bents.

For General Notes, see Sheet No. 17

For Reinforcing Bar Notes, see Standard Dwg. E703-BRST-01.

For additional End Bent Details, see Sheet Nos. 19, 21, 22 & 23.

NOT FOR CONSTRUCTION

DESIGNED: BLM DRAWN: DWB

CHECKED: MJH CHECKED: BLM

INDIANA
DEPARTMENT OF TRANSPORTATION

END BENT DETAILS

HORIZONTAL SCALE	BRIDGE FILE
AS NOTED	HAMILTON 29
VERTICAL SCALE	DESIGNATION
AS NOTED	0902302
SURVEY BOOK	SHEETS
----	20 of 43
CONTRACT	PROJECT
R-38073	1401701

S:\2007\Proj\2007-162\Plans\Bridge Plans\07-162 End Bents.dwg, End Bent 02, 4/11/2019 2:57:46 PM

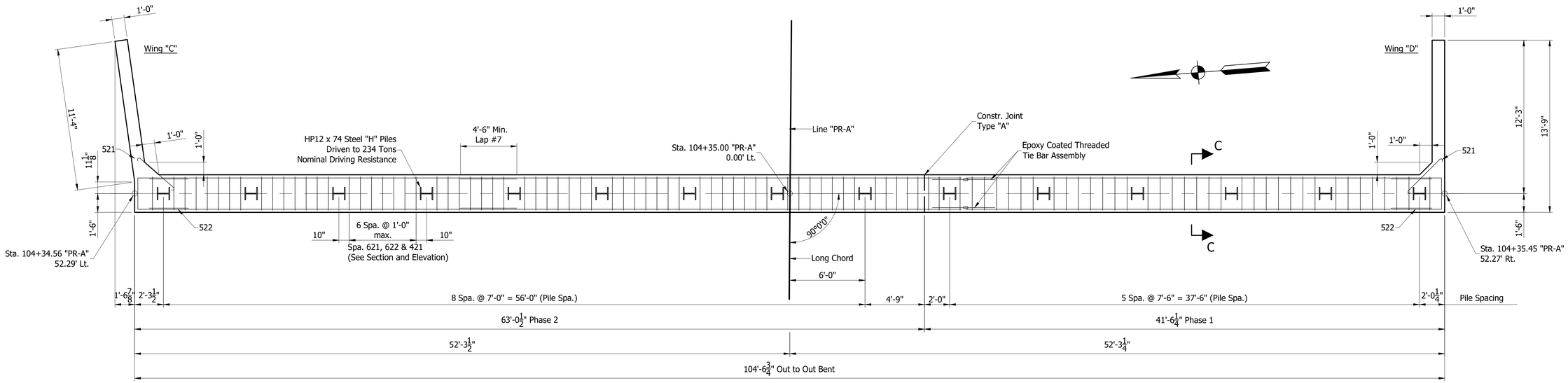

BENT NO.2 - PILE PLAN

Scale: 1/4"=1'-0"

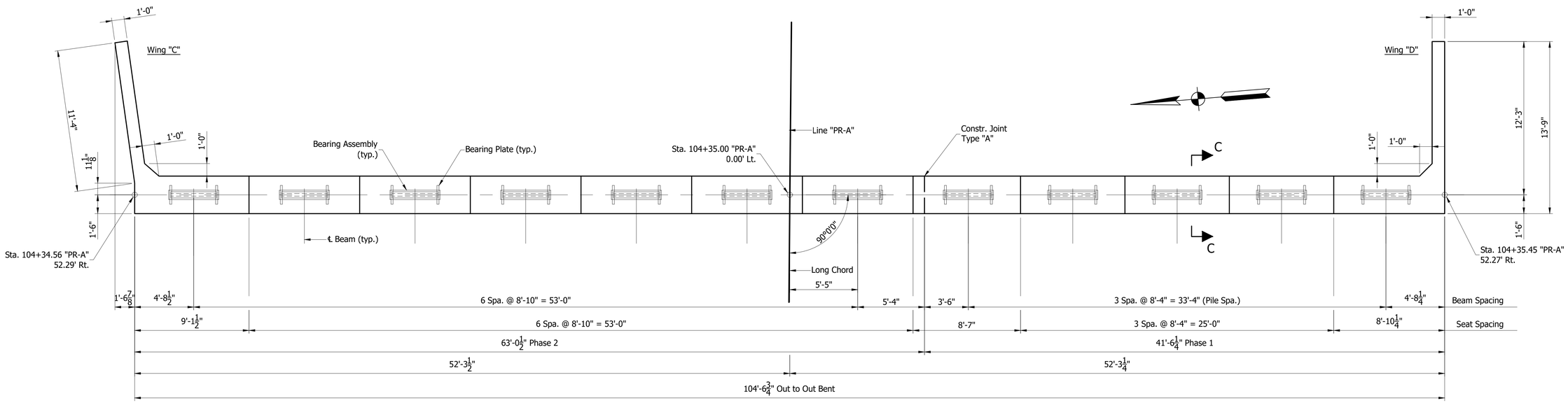

BENT NO.2 - CAP PLAN

Scale: 1/4"=1'-0"

NOTES:

All Reinforcing Steel to be Epoxy Coated in End Bents.

For General Notes, see Sheet No. 17

For Reinforcing Bar Notes, see Standard Dwg. E703-BRST-01.

For additional End Bent Details, see Sheet Nos. 19, 20, 22 & 23.

NOT FOR CONSTRUCTION

DESIGNED: BLM DRAWN: DWB

CHECKED: MJH CHECKED: BLM

INDIANA
DEPARTMENT OF TRANSPORTATION

END BENT DETAILS

HORIZONTAL SCALE	BRIDGE FILE
AS NOTED	HAMILTON 29
VERTICAL SCALE	DESIGNATION
AS NOTED	0902302

SURVEY BOOK	SHEETS		
----	21	of	43
CONTRACT	PROJECT		
R-38073	1401701		

S:\2003Proj\2007\1427\Plans\Bridge Plans\07-1427 End Bents.dwg, End Bent 03, 4/11/2019 1:54:32 PM

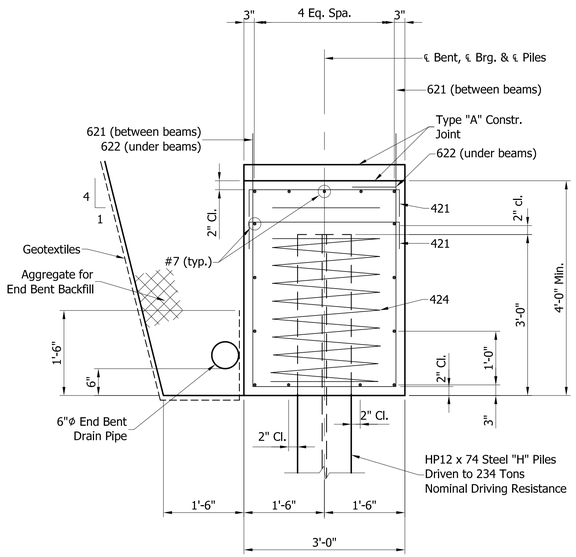

SECTION "C-C"

Scale: 3/4" = 1'-0"

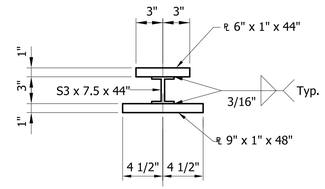

SECTION

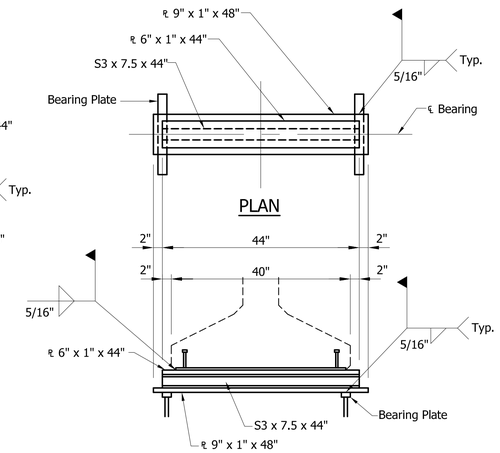

BEARING ASSEMBLIES

No Scale

ELEVATION

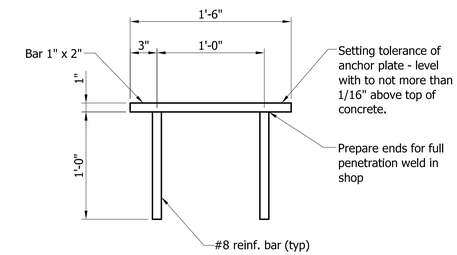

BEARING PLATE

Scale: 1 1/2" = 1'-0"

Note: 7/8"ø x 8" automatically welded anchor studs (headed) may be used in lieu of the #8 reinf. bars.

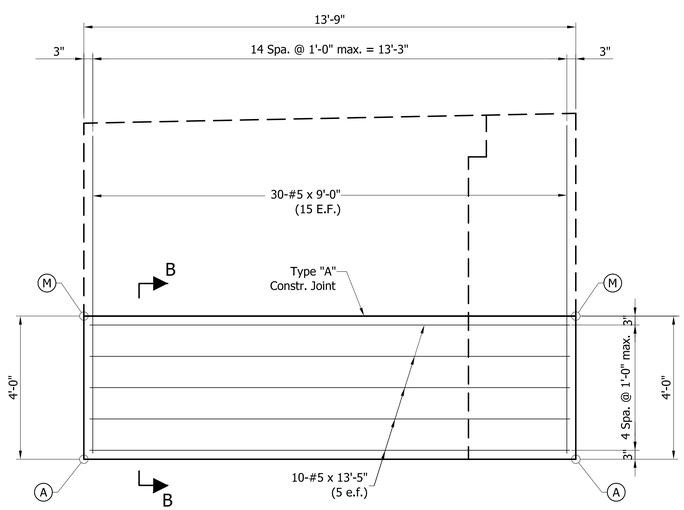

WINGWALL "B" & "C" ELEVATION

Scale: 1/2" = 1'-0"

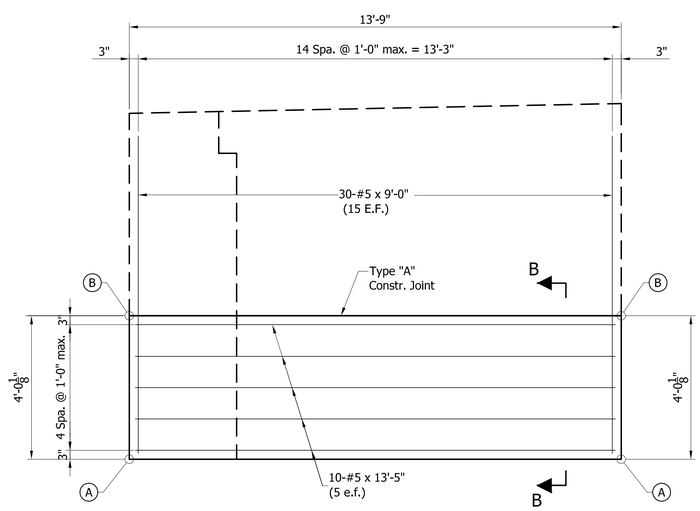

WINGWALL "A" & "D" ELEVATION

Scale: 1/2" = 1'-0"

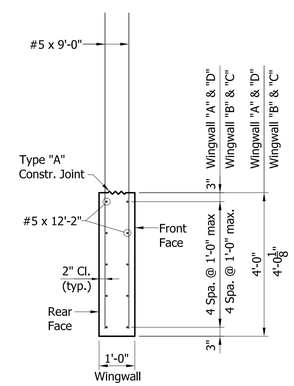

SECTION "B-B"

Scale: 1/2" = 1'-0"

NOTES:

All Reinforcing Steel to be Epoxy Coated in End Bents.

For General Notes, see Sheet No. 17

For Reinforcing Bar Notes, see Standard Dwg. E703-BRST-01.

For additional End Bent Details, see Sheet Nos. 19, 20, 21 & 23.

NOT FOR CONSTRUCTION

DESIGNED: BLM | DRAWN: DWB

CHECKED: MJH | CHECKED: BLM

INDIANA
DEPARTMENT OF TRANSPORTATION

END BENT DETAILS

HORIZONTAL SCALE	BRIDGE FILE
AS NOTED	HAMILTON 29
VERTICAL SCALE	DESIGNATION
AS NOTED	0902302
SURVEY BOOK	SHEETS
----	22 of 43
CONTRACT	PROJECT
R-38073	1401701

S:\2007\hq\2007-162\Plans\Bridge Plans\07-162 End Bents.dwg, End Bent 04, 4/11/2019 1:55:16 PM

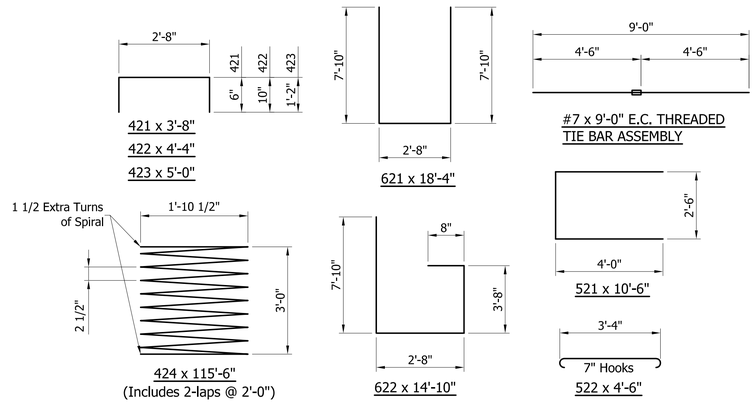

BAR BENDING DETAILS

No Scale

BILL OF MATERIALS END BENT NO.1				BILL OF MATERIALS END BENT NO.2			
EPOXY COATED REINFORCING STEEL				EPOXY COATED REINFORCING STEEL			
Size or Mark	No. of Bars	Length	Weight (lbs)	Size or Mark	No. of Bars	Length	Weight (lbs)
#7	30	40'-0"		#7	30	40'-0"	
#7	15	26'-3"		#7	15	26'-3"	
		Total #7	3258 lbs			Total #7	3258 lbs
621	49	18'-4"		621	49	18'-4"	
622	49	14'-10"		622	49	14'-10"	
		Total #6	2441 lbs			Total #6	2441 lbs
521	10	10'-6"		521	10	10'-6"	
522	10	4'-6"		522	10	4'-6"	
#5	20	13'-5"		#5	20	13'-5"	
#5	60	9'-0"		#5	60	9'-0"	
		Total #5	1000 lbs			Total #5	1000 lbs
421	230	3'-8"		421	230	3'-8"	
422	38	4'-4"		422	38	4'-4"	
423	39	5'-0"		423	39	5'-0"	
424	15	115'-6"		424	15	115'-6"	
		Total #5	1961 lbs			Total #5	1961 lbs
Total E.C. Reinforcing Steel			8659 lbs	Total E.C. Reinforcing Steel			8659 lbs
CONCRETE				CONCRETE			
Class "C" Conc. in Superstructure			55.4 cys	Class "C" Conc. in Superstructure			55.4 cys
MISCELLANEOUS				MISCELLANEOUS			
E.C. Threaded Tie Bar Assemblies			15 each	E.C. Threaded Tie Bar Assemblies			15 each
HP12 x 74 Steel "H" Piles 14 @ 53 lft.			742 lft.	HP12 x74 Steel "H" Piles 14 @ 55 lft.			770 lft.
Test Pile, Dynamic, Production 1 @ 63 lft.			63 lft.	Test Pile, Dynamic, Production 1 @ 65 lft.			65 lft.
Test Pile, Dynamic, Restrike			1 each	Test Pile, Dynamic, Restrike			1 each
Dynamic Pile Load Test			1 each	Dynamic Pile Load Test			1 each
Prebored Hole, 21"Ø 15 @ 36.3 lft.			545 lft.	Prebored Hole, 21"Ø 15 @ 38.7 lft.			581 lft.

NOTES:

All Reinforcing Steel to be Epoxy Coated in End Bents.

For General Notes, see Sheet No. 17

For Reinforcing Bar Notes, see Standard Dwg. E703-BRST-01.

For additional End Bent Details, see Sheet Nos. 19, 20, 21 & 22.

NOT FOR CONSTRUCTION

DESIGNED: BLM | DRAWN: DWB

CHECKED: MJH | CHECKED: BLM

INDIANA
DEPARTMENT OF TRANSPORTATION

END BENT DETAILS

HORIZONTAL SCALE	BRIDGE FILE
AS NOTED	HAMILTON 29
VERTICAL SCALE	DESIGNATION
AS NOTED	0902302

SURVEY BOOK	SHEETS		
----	23	of	43
CONTRACT	PROJECT		
R-38073	1401701		

S:\30079\proj\30071-1629\Plans\Bridge Plans\07-162 End Bents.dwg, End Bent 05, 4/11/2019 2:12:27 PM

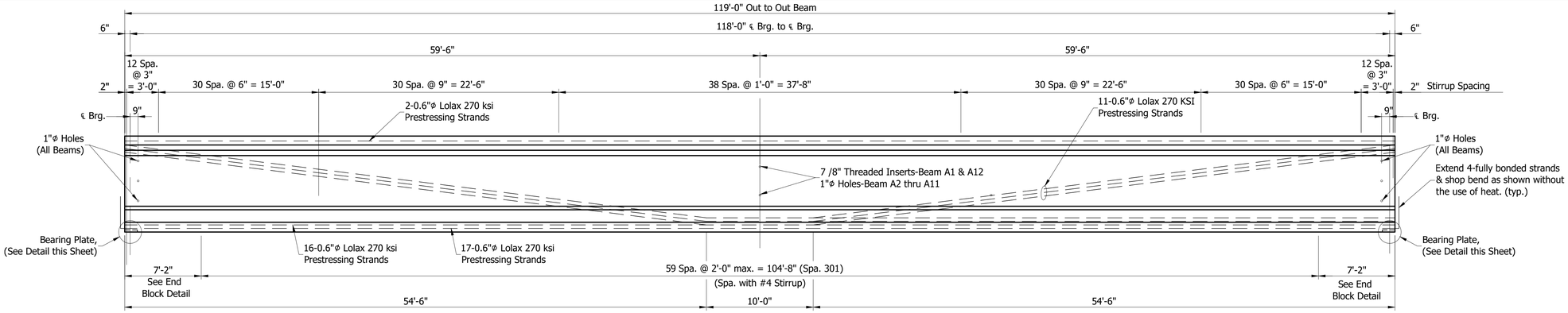

BEAM REINFORCING

Scale: Horiz.: 3/16" = 1'-0"
Vert.: 3/8" = 1'-0"

ESTIMATED BEAM CAMBER	
Initial Beam Camber	0.2768'
Slab Deflection	0.2333'
Residual Camber	0.0434'

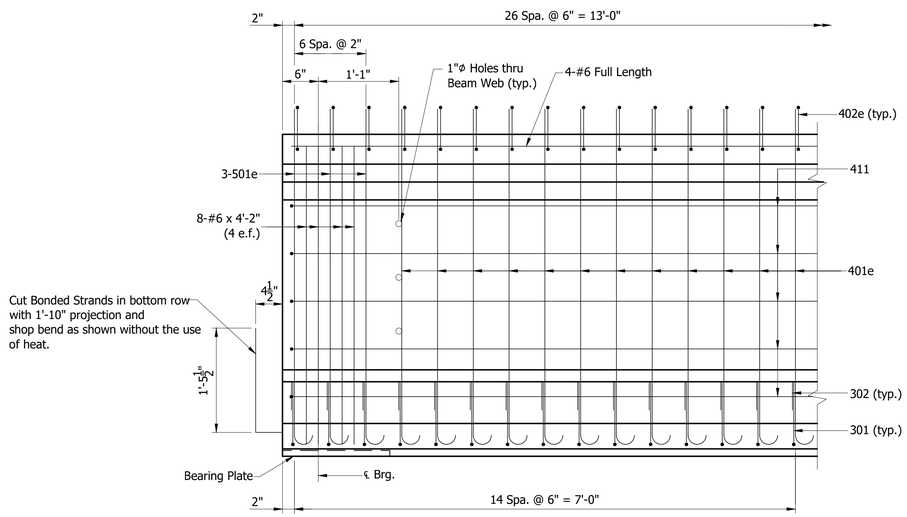

END BLOCK DETAIL

Scale: 1" = 1'-0"

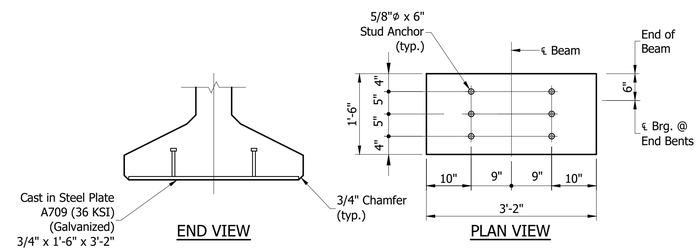

Embedded Plates shall be Hot Dipped Galvanized in accordance with requirements of A.S.T.M. Specification A123 or A153. Plates shall conform to A.S.T.M. Specification A709, Grade 36 KSI

BEARING PLATE DETAILS

Scale: 3/4" = 1'-0"

NOTES

-Prestressing Reinforcement shall be 0.6" uncoated, Seven Wire Low Relaxation 270 KSI Special (ASTM A416M)

-Strand Area = 0.217 Sq. Inch with a G.U.T.S. of 58,590 Lbs. Per Strand. Spacing to be 2" Vertically and Horizontally.

-Detension Strand Symmetrically about Centerline.

-Initial Pull Per Strand 43.94 Kips.

-Beams shall be Cast a minimum of 30 days before Deck is Poured, and Beams must have a minimum Concrete Strength of 8000 psi.

-Concrete Strength @ 28 days: f'c = 8000 psi.
f'ci = 7000 psi

-No Bond Stress shall be Transferred to the Concrete, nor shall End Anchor be Released, until the Concrete has attained a Compressive Strength of 7000 psi.

-All Reinforcing Steel extending into the deck shall be Epoxy Coated

-"e"-Denotes Epoxy Coated Reinforcing Steel

-The tops of all beams and the exterior face of exterior beams to be surface sealed prior to shipping beams to jobsite.

-Top of Beams are to be Scored Transversely at about 3" Centers with a Pointed Tool. max. Depth of Scoring to be 1/4".

-All Reinforcing in Precast Beams shall be Grade 60 Minimum Yield Strength.

-Beams to be Supported at Bearing Points while stored, beams to be lifted and supported during transportation as required by stability analysis.

-During Lifting, Transportation, Storage, and Erection, Beams shall be Maintained Vertically at all times. Failure to do so could result in sudden Failure of Beams.

-Adequate Bracing must be provided at all times during Storage, Transportation, and Erection to Resist Lateral Loads. First beam erected in each span shall be braced to the top of the bent cap before releasing from cranes.

-The Beam Manufacturer shall furnish the Engineer, thru the Contractor, shop drawings for his approval prior to the casting of the beams.

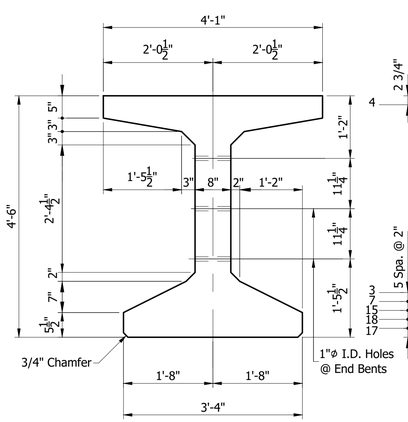

TYPICAL SECTION

Scale: 3/4" = 1'-0"

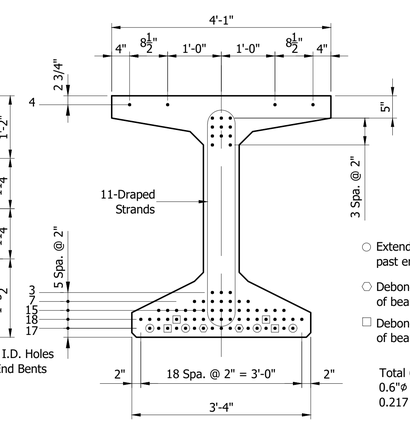

STRAND PATTERN

Scale: 3/4" = 1'-0"

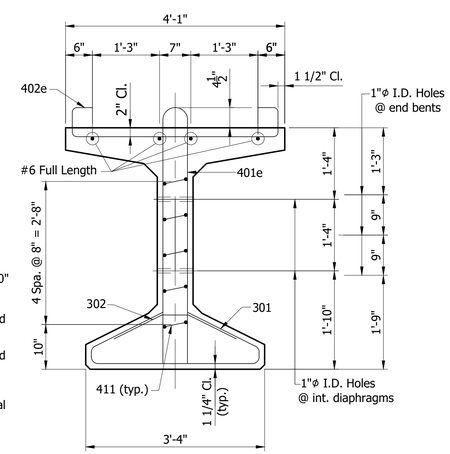

TYPICAL BEAM REINFORCING

Scale: 3/4" = 1'-0"

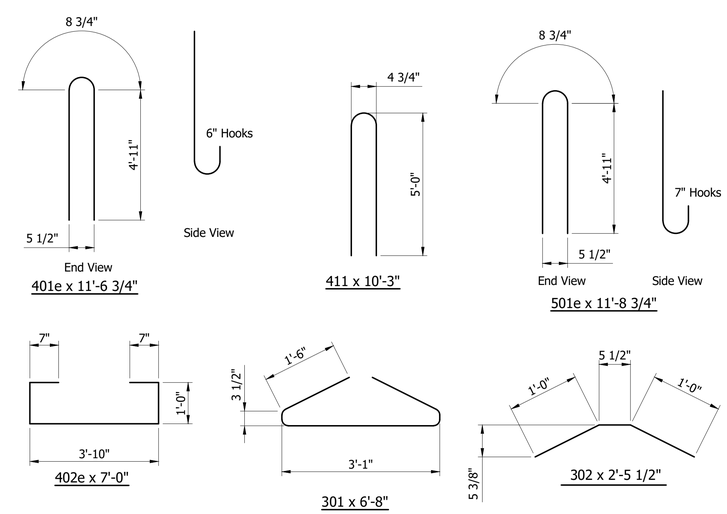

BAR BENDING DETAILS

No Scale

NOTE:

For General Notes, see Sheet No. 17

For Interior Steel Diaphragms, see Standard Dwg. E 707-SDPC-03 & E 707-SDPC-04.

For additional Beam Details, see Sheet No. 25

NOT FOR CONSTRUCTION

DESIGNED: BLM	DRAWN: DWB
CHECKED: MJH	CHECKED: BLM

INDIANA
DEPARTMENT OF TRANSPORTATION

BEAM DETAILS

HORIZONTAL SCALE	BRIDGE FILE
AS NOTED	HAMILTON 29
VERTICAL SCALE	DESIGNATION
AS NOTED	0902302
SURVEY BOOK	SHEETS
----	24 of 43
CONTRACT	PROJECT
R-38073	1401701

S:\2007Proj\2007-162\Plans\Bridge Plans\07-162 Beam Details.dwg, Beam Details 01, 4/11/2019 2:22:32 PM

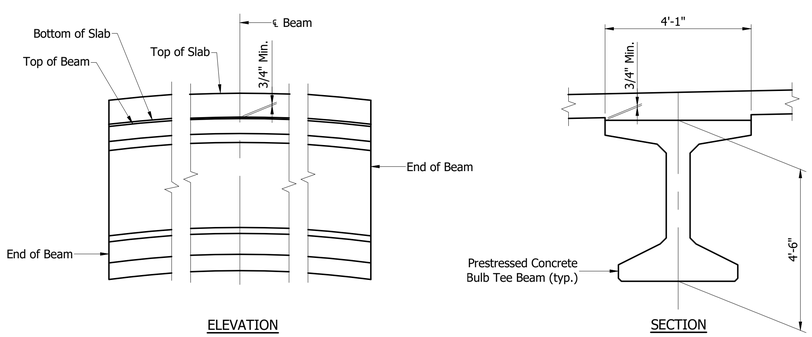

FILLET DETAILS

Scale 1/2" = 1'-0"

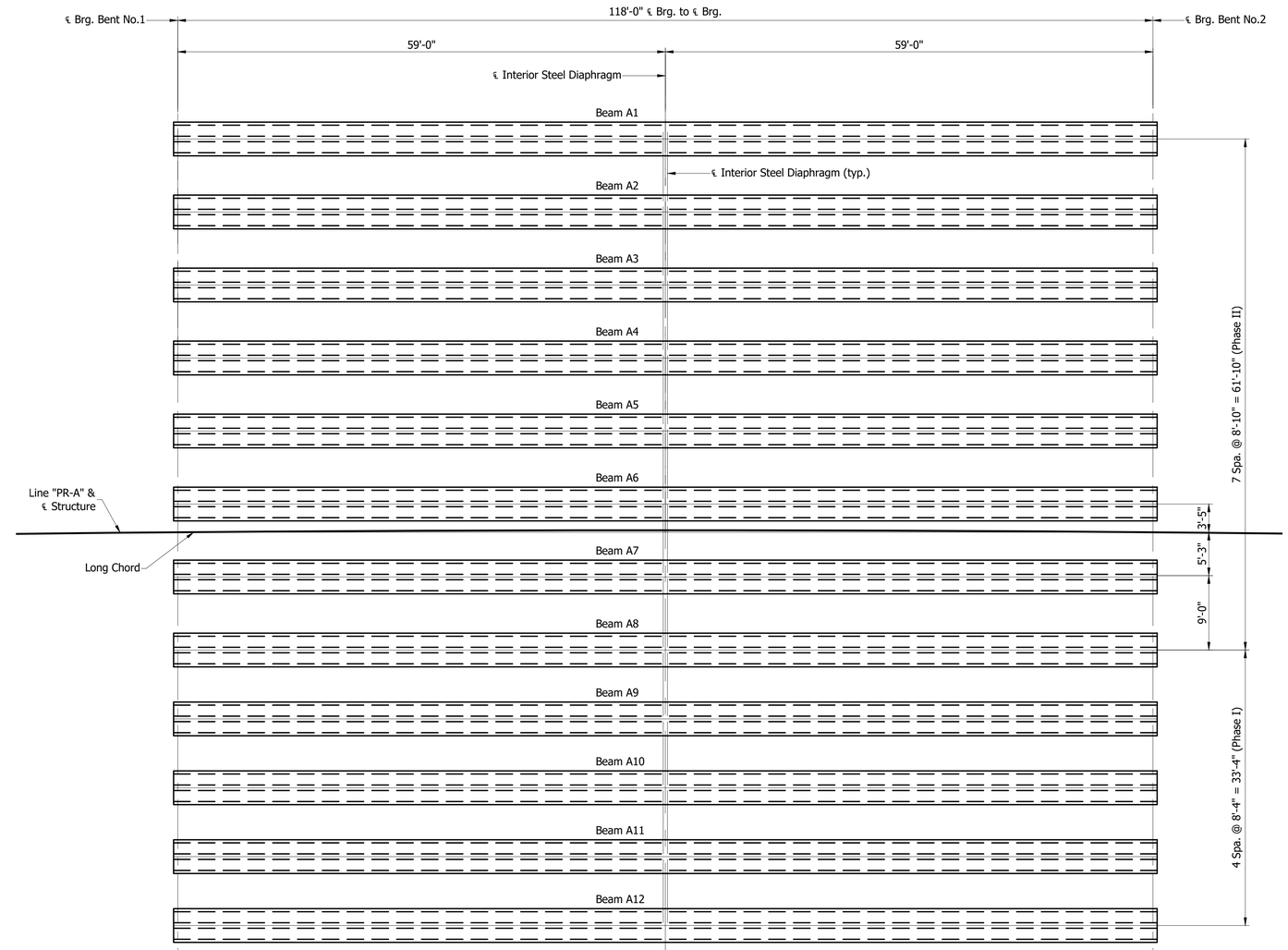

FRAMING PLAN

Scale: 1/8" = 1'-0"

Weight of Structural Steel for Interior Diaphragms = xxxx Lbs.
Cost to be included in the cost of Structural Members.

NOTE:

For General Notes, see Sheet No. 17

For Interior Steel Diaphragms, see Standard Dwg. E 707-SDPC-03 & E 707-SDPC-04.

For additional Beam Details, see Sheet No. 24

NOT FOR CONSTRUCTION

DESIGNED: BLM	DRAWN: DWB
CHECKED: MJH	CHECKED: BLM

INDIANA
DEPARTMENT OF TRANSPORTATION

BEAM DETAILS

HORIZONTAL SCALE	BRIDGE FILE
AS NOTED	HAMILTON 29
VERTICAL SCALE	DESIGNATION
AS NOTED	0902302
SURVEY BOOK	SHEETS
----	25 of 43
CONTRACT	PROJECT
R-38073	1401701

S:\2007Proj\2007-162\Plans\Bridge Plans\07-162 Beam Details.dwg, Beam Details 02, 4/11/2019 2:23:13 PM

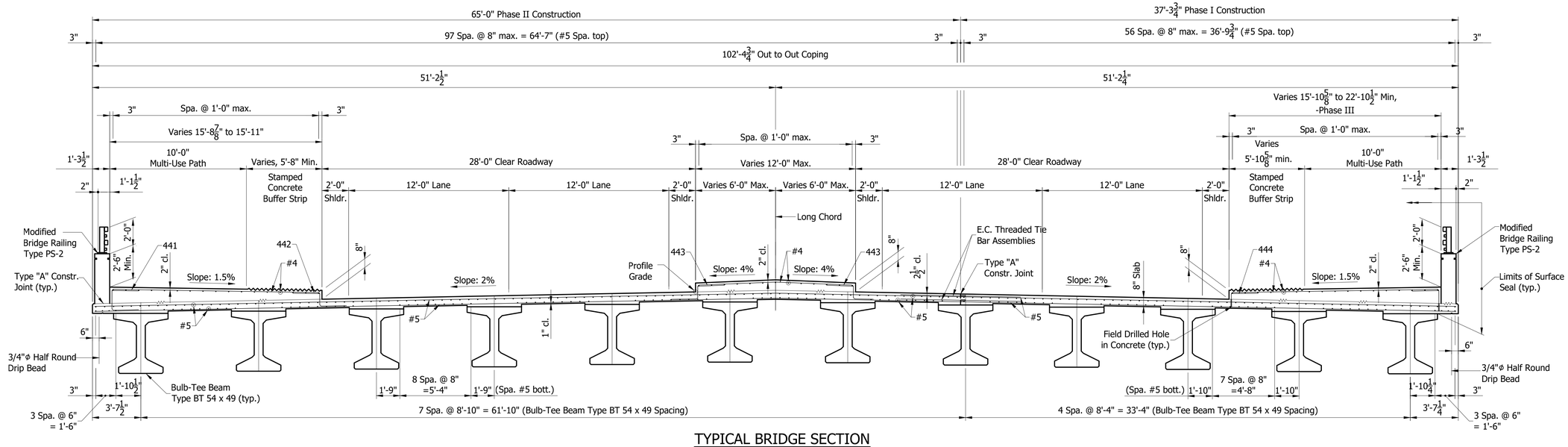

TYPICAL BRIDGE SECTION

Scale: 1/4"=1'-0"

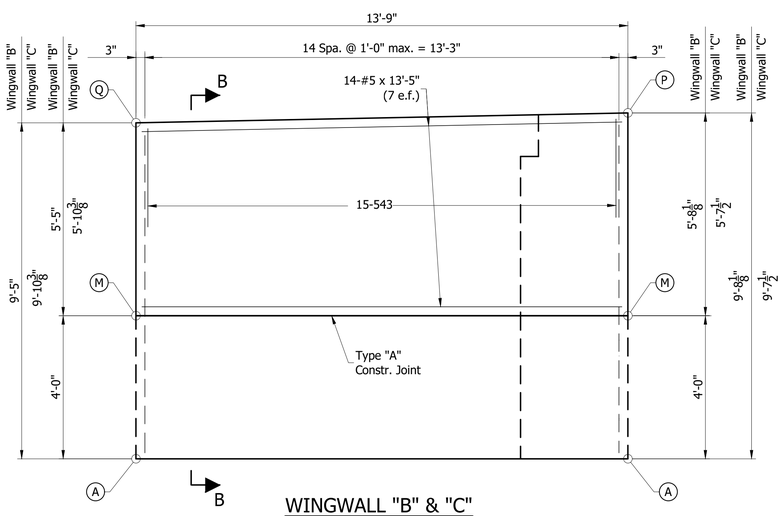

WINGWALL "B" & "C" ELEVATION

Scale: 1/2" = 1'-0"

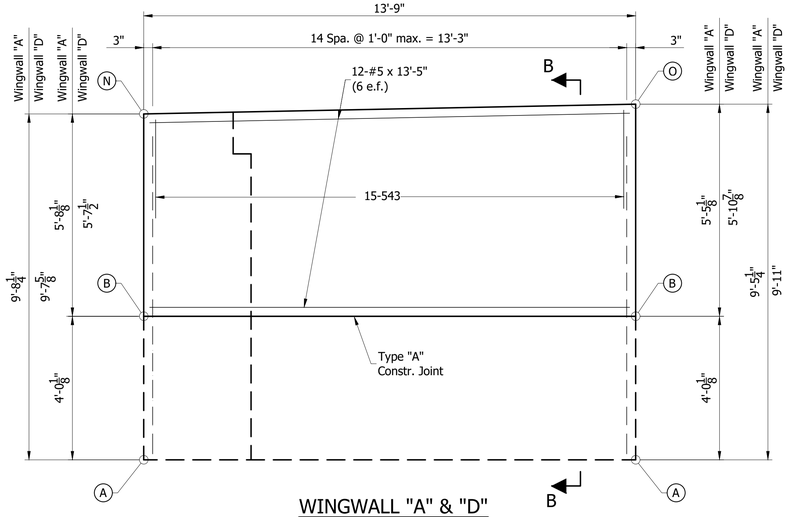

WINGWALL "A" & "D" ELEVATION

Scale: 1/2" = 1'-0"

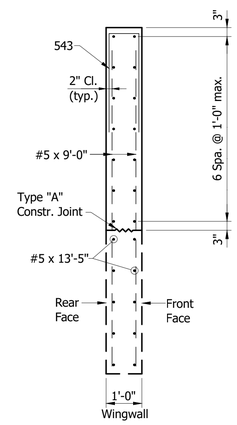

SECTION "B-B"

Scale: 1/2" = 1'-0"

TABLE OF ELEVATIONS		
POINT	BENT NO.1	BENT NO.2
A	861.33'	863.68'
B	865.34'	867.70'
C	865.51'	867.86'
D	865.69'	868.03'
E	865.87'	868.19'
F	866.04'	868.35'
G	866.22'	868.53'
H	866.17'	868.57'
I	865.99'	868.39'
J	865.83'	868.22'
K	865.66'	868.04'
L	865.49'	867.85'
M	865.33'	867.68'
N	871.03'	873.33'
O	870.77	873.61'
P	871.02'	873.31'
Q	870.75'	873.55'
R	872.02'	874.37'

NOTES:

All Reinforcing Steel to be Epoxy Coated in Superstructure.

For General Notes, see Sheet No. 17

For Reinforcing Bar Notes, see Standard Dwg. E 703-BRST-01.

For additional Superstructure Details, see Sheet No. 27-30.

Field drilled holes in concrete shall extend into concrete with an approved anchor system. Minimum pullout force for #4 bar = 12,000 lbs.

NOT FOR CONSTRUCTION

DESIGNED: BLM DRAWN: DWB
CHECKED: MJH CHECKED: BLM

INDIANA DEPARTMENT OF TRANSPORTATION

SUPERSTRUCTURE DETAILS

HORIZONTAL SCALE	BRIDGE FILE
AS NOTED	HAMILTON 29
VERTICAL SCALE	DESIGNATION
AS NOTED	0902302
SURVEY BOOK	SHEETS
----	26 of 43
CONTRACT	PROJECT
R-38073	1401701

S:\2007Proj\2007-162\Plans\Bridge Plans\07-162 Superstructure Details.dwg, Super 1, 4/12/2019 12:31:39 PM

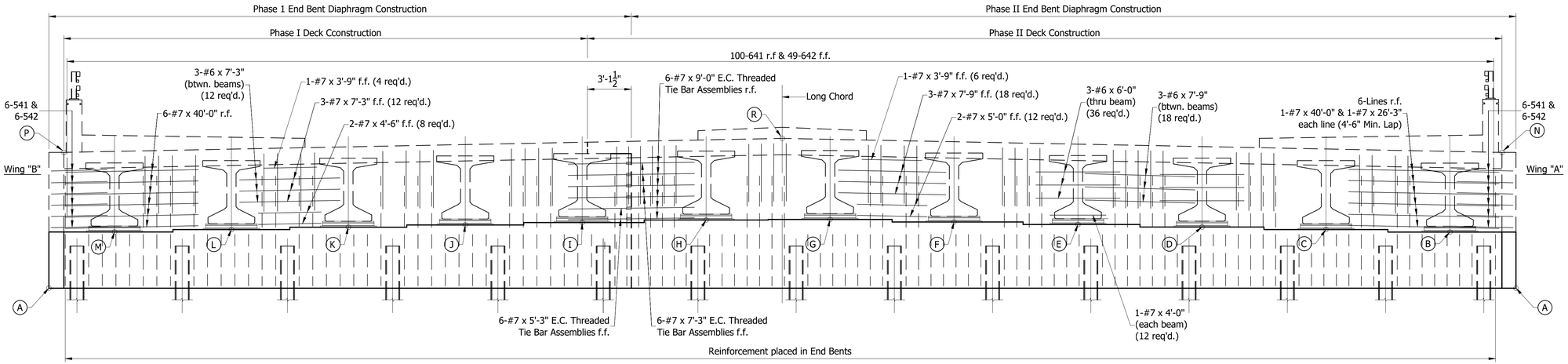

BENT NO.1 - ELEVATION

Scale: 1/4"=1'-0"

TABLE OF ELEVATIONS		
POINT	BENT NO.1	BENT NO.2
A	861.33'	863.68'
B	865.34'	867.70'
C	865.51'	867.86'
D	865.69'	868.03'
E	865.87'	868.19'
F	866.04'	868.35'
G	866.22'	868.53'
H	866.17'	868.57'
I	865.99'	868.39'
J	865.83'	868.22'
K	865.66'	868.04'
L	865.49'	867.85'
M	865.33'	867.68'
N	871.03'	873.33'
O	870.77	873.61'
P	871.02'	873.31'
Q	870.75'	873.55'
R	872.02'	874.37'

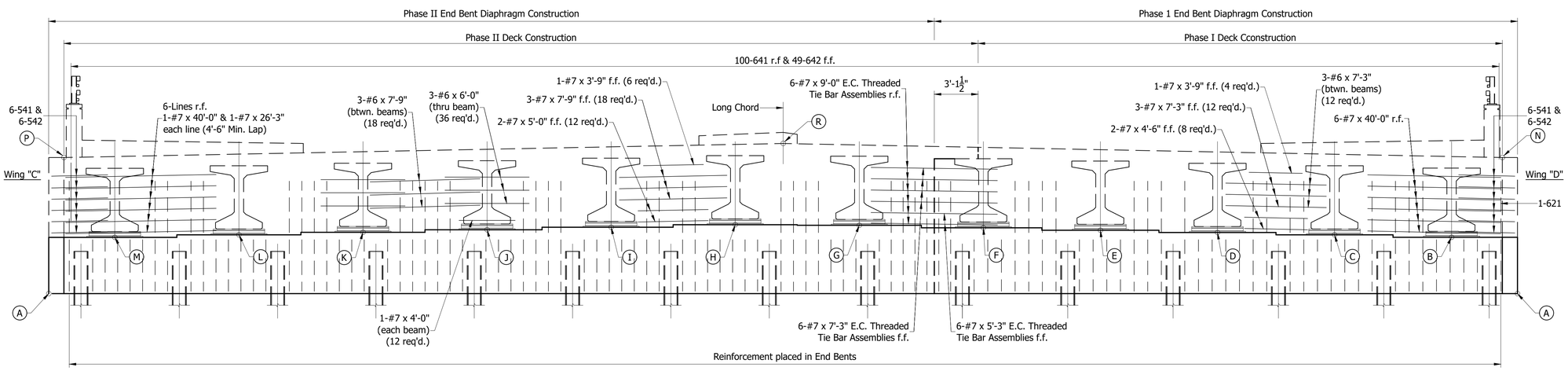

BENT NO.2 - ELEVATION

Scale: 1/4"=1'-0"

NOTES:

All Reinforcing Steel to be Epoxy Coated in Superstructure.

For General Notes, see Sheet No. 17

For Reinforcing Bar Notes, see Standard Dwg. E 703-BRST-01.

For additional Superstructure Details, see Sheet No. 26, 28, 29 & 30.

Field drilled holes in concrete shall extend into concrete with an approved anchor system. Minimum pullout force for #4 bar = 12,000 lbs.

NOT FOR CONSTRUCTION

DESIGNED: BLM | DRAWN: DWB
CHECKED: MJH | CHECKED: BLM

INDIANA
DEPARTMENT OF TRANSPORTATION

SUPERSTRUCTURE DETAILS

HORIZONTAL SCALE	BRIDGE FILE
AS NOTED	HAMILTON 29
VERTICAL SCALE	DESIGNATION
AS NOTED	0902302
SURVEY BOOK	SHEETS
----	27 of 43
CONTRACT	PROJECT
R-38073	1401701

S:\2007Proj\2007-162\Plans\Bridge Plans\07-162 Superstructure Details.dwg, Super 2, 4/12/2019 12:31:57 PM

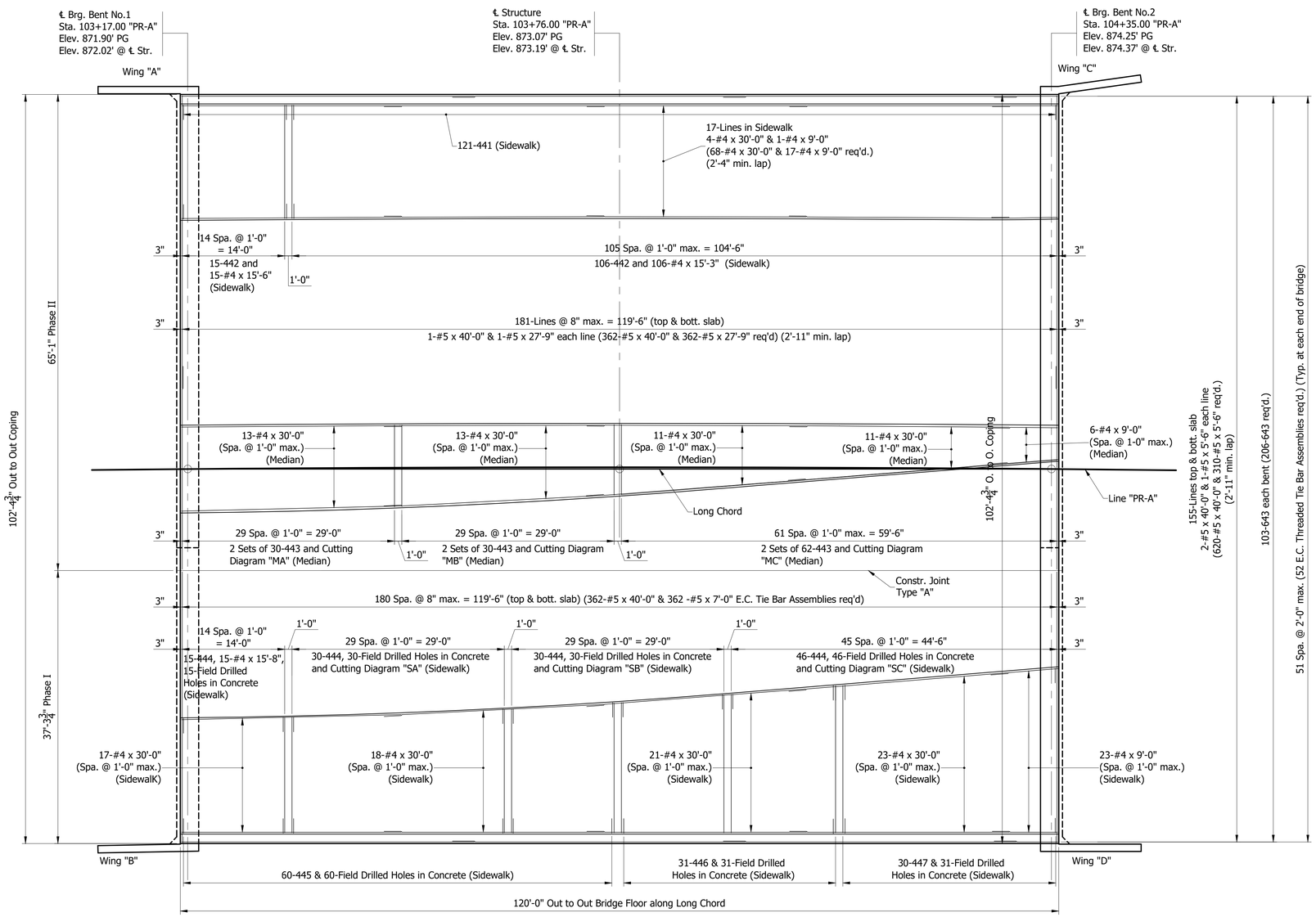

PLAN

Scale: 1/8"=1'-0"

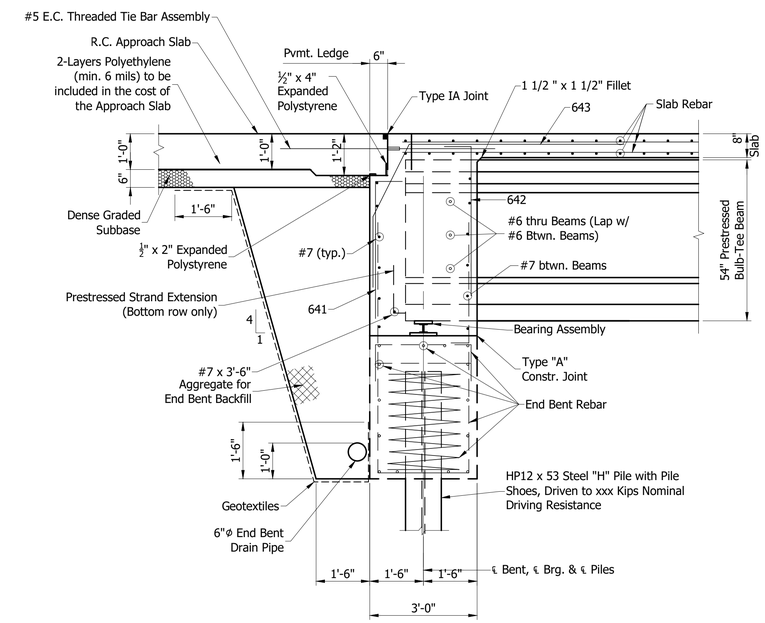

SECTION "C-C"

Scale: 1/2" = 1'-0"

NOTES:

All Reinforcing Steel to be Epoxy Coated in Superstructure.

For General Notes, see Sheet No. 17

For Reinforcing Bar Notes, see Standard Dwg. E 703-BRST-01.

For additional Superstructure Details, see Sheet No. 26, 27, 28 & 29.

Field drilled holes in concrete shall extend into concrete with an approved anchor system. Minimum pullout force for #4 bar = 12,000 lbs.

NOT FOR CONSTRUCTION

DESIGNED: BLM	DRAWN: DWB
CHECKED: MJH	CHECKED: BLM

INDIANA
DEPARTMENT OF TRANSPORTATION

SUPERSTRUCTURE DETAILS

HORIZONTAL SCALE	BRIDGE FILE
AS NOTED	HAMILTON 29
VERTICAL SCALE	DESIGNATION
AS NOTED	0902302
SURVEY BOOK	SHEETS
----	28 of 43
CONTRACT	PROJECT
R-38073	1401701

S:\2007Proj\2007-162\Plans\Bridge Plans\07-162 Superstructure Details.dwg, Super 3, 4/12/2019 12:32:19 PM

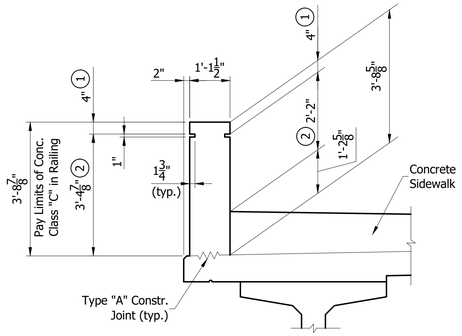

NORTH COPING BARRIER RAILING SECTION SHOWING DIMENSIONS

Scale: 1/2" = 1'-0"

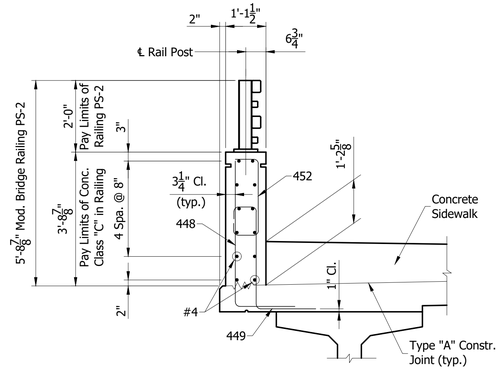

NORTH COPING BARRIER RAILING SECTION SHOWING REINFORCING

Scale: 1/2" = 1'-0"

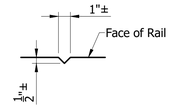

CHAMFERED RECESS

No Scale

NOTE:
All Concrete Bridge Railing to receive an Architectural Relief Treatment resembling a Dry Stacked Stone, See Special Provisions.

(1) Cap Representation

(2) Relief Texture representing Dry Stacked Stone

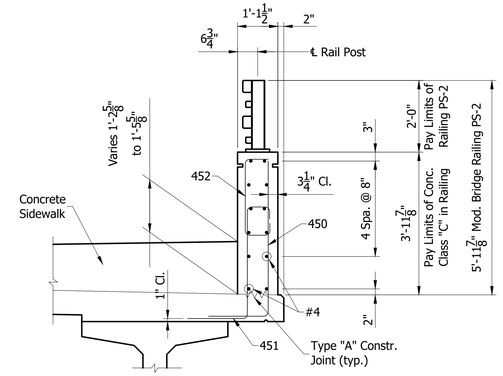

SOUTH COPING BARRIER RAILING SECTION SHOWING REINFORCING

Scale: 1/2" = 1'-0"

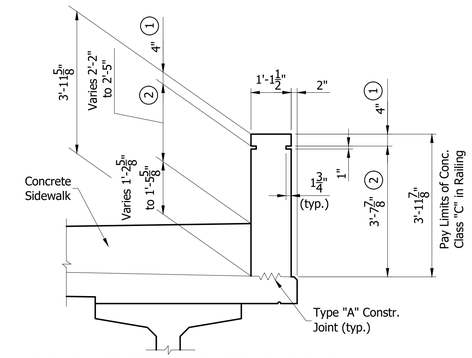

SOUTH COPING BARRIER RAILING SECTION SHOWING REINFORCING

Scale: 1/2" = 1'-0"

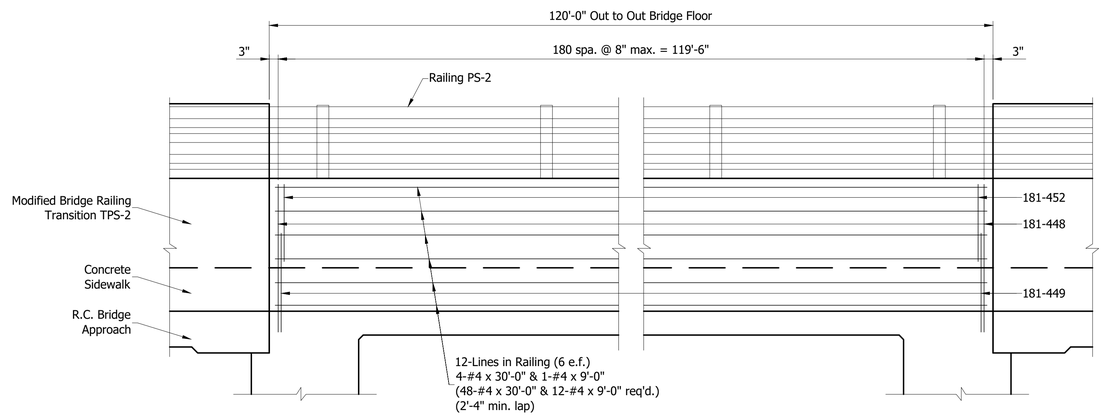

NORTH COPING BARRIER RAILING ELEVATION

Scale: 1/2" = 1'-0"

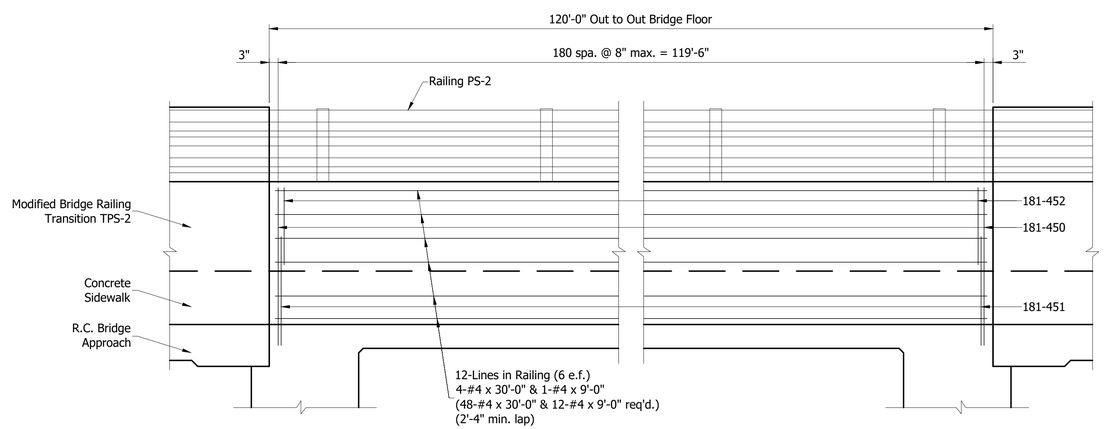

SOUTH COPING BARRIER RAILING ELEVATION

Scale: 1/2" = 1'-0"

NOTES:

All Reinforcing Steel to be Epoxy Coated in Superstructure.

For General Notes, see Sheet No. 17

For Reinforcing Bar Notes, see Standard Dwg. E 703-BRST-01.

For additional Superstructure Details, see Sheet No. 26, 27, 28 & 30.

Field drilled holes in concrete shall extend into concrete with an approved anchor system. Minimum pullout force for #4 bar = 12,000 lbs.

NOT FOR CONSTRUCTION

DESIGNED: BLM | DRAWN: DWB

CHECKED: MJH | CHECKED: BLM

INDIANA
DEPARTMENT OF TRANSPORTATION

SUPERSTRUCTURE DETAILS

HORIZONTAL SCALE	BRIDGE FILE
AS NOTED	HAMILTON 29
VERTICAL SCALE	DESIGNATION
AS NOTED	0902302
SURVEY BOOK	SHEETS
----	29 of 43
CONTRACT	PROJECT
R-38073	1401701

S:\2007Proj\2007-162\Plans\Bridge Plans\07-162 Superstructure Details.dwg, Super 4, 4/17/2019 1:21:56 PM

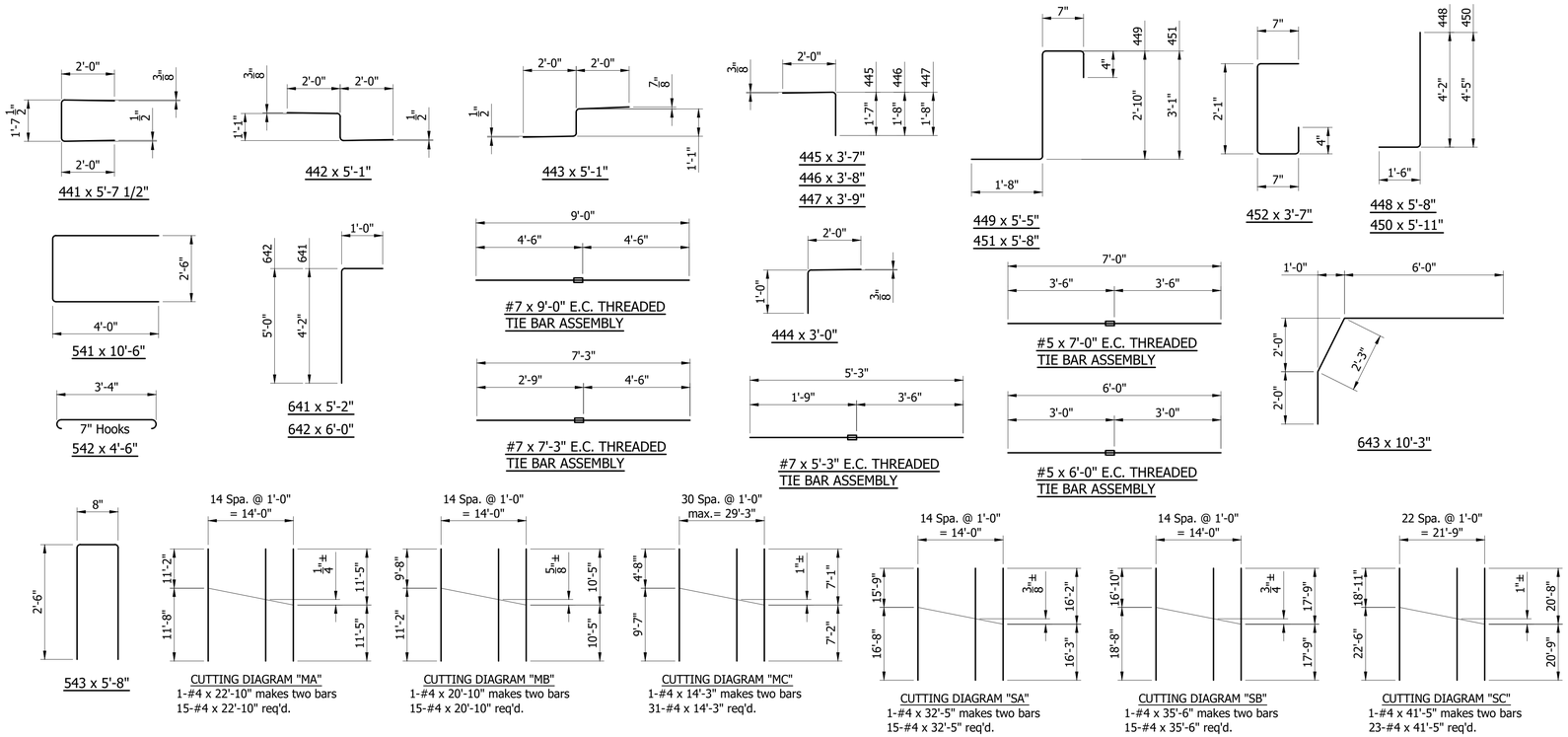

BAR BENDING DETAILS

No Scale

BILL OF MATERIALS
SUPERSTRUCTURE

EPOXY COATED REINFORCING STEEL			
Size or Mark	No. of Bars	Length	Weight (lbs)
#7	24	40'-0"	
#7	12	26'-3"	
#7	36	7'-9"	
#7	48	7'-3"	
#7	24	5'-0"	
#7	16	4'-6"	
#7	24	4'-0"	
#7	22	3'-9"	
		Total #7	4645 lbs
641	200	5'-2"	
642	98	6'-0"	
643	206	10'-3"	
#6	36	7'-9"	
#6	72	6'-0"	
		Total #6	6675 lbs
541	24	10'-6"	
542	24	4'-6"	
543	60	5'-8"	
#5	1344	40'-0"	
#5	362	26'-3"	
#5	56	13'-5"	
#5	310	5'-6"	
		Total #5	69.275 lbs
441	121	5'-7 1/2"	
442	121	5'-1"	
443	244	5'-1"	
444	121	3'-0"	
445	60	3'-7"	
446	31	3'-8"	
447	30	3'-9"	
448	181	5'-8"	
449	181	5'-5"	
450	181	5'-11"	
451	181	5'-8"	
452	362	3'-7"	
#4	23	41'-5"	
#4	15	35'-6"	
#4	15	32'-5"	
#4	291	30'-0"	
#4	15	22'-10"	
#4	15	20'-10"	
#4	15	15'-8'	
#4	15	15'-6"	
#4	106	15'-3"	
#4	31	14'-3"	
#4	70	9'-0"	
		Total #4	15,322 lbs
Total E.C. Reinforcing Steel			96,127 lbs
CONCRETE			
Class "C" Conc. in Superstructure			601.7 cys
Class "C" Conc. in Superstructure, Modified			651.0 cys
Class "C" Conc. in Railing			38.7 cys
MISCELLANEOUS			
Surface Seal			15,190 sft.
E.C. Threaded Tie Bar Assemblies			502 each
Field Drilled Holes in Concrete			242 each

NOTES:

All Reinforcing Steel to be Epoxy Coated in Superstructure.

For General Notes, see Sheet No. 17

For Reinforcing Bar Notes, see Standard Dwg. E 703-BRST-01.

For additional Superstructure Details, see Sheet No. 26, 27, 28 & 29.

Field drilled holes in concrete shall extend into concrete with an approved anchor system. Minimum pullout force for #4 bar = 12,000 lbs.

NOT FOR CONSTRUCTION

DESIGNED: BLM DRAWN: DWB
CHECKED: MJH CHECKED: BLM

INDIANA
DEPARTMENT OF TRANSPORTATION

SUPERSTRUCTURE DETAILS

HORIZONTAL SCALE	BRIDGE FILE
AS NOTED	HAMILTON 29
VERTICAL SCALE	DESIGNATION
AS NOTED	0902302

SURVEY BOOK	SHEETS
----	30 of 43
CONTRACT	PROJECT
R-38073	1401701

S:\2007Proj\0071-162\Plans\Bridge Plans\07-162 Superstructure Details.dwg, Super 5, 4/12/2019 12:33:34 PM

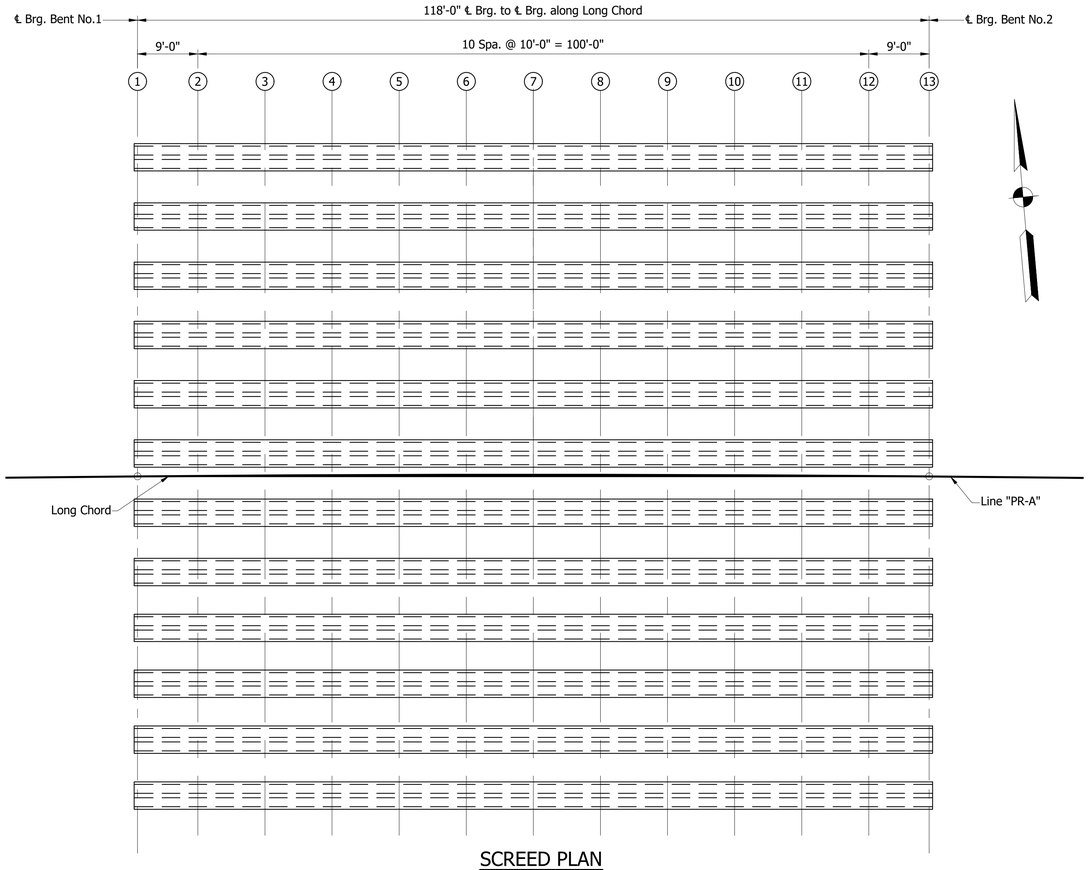

SCREED PLAN

Scale: 3/32"=1'-0"

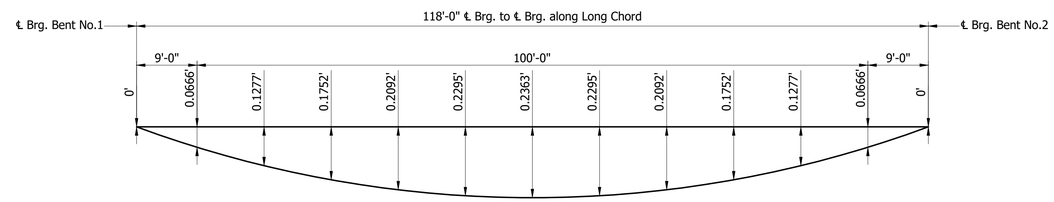

DEADLOAD DEFLECTIONS

No Scale

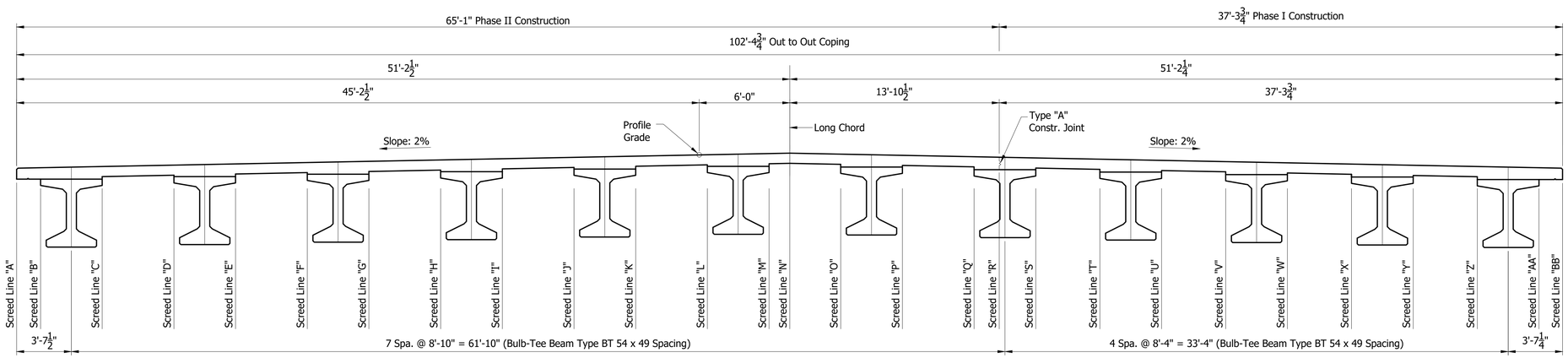

TYPICAL SCREED SECTION

Scale: 1/4"=1'-0"

NOT FOR CONSTRUCTION

DESIGNED: BLM	DRAWN: DWB
CHECKED: MJH	CHECKED: BLM

INDIANA
DEPARTMENT OF TRANSPORTATION

SCREED DETAILS

HORIZONTAL SCALE	BRIDGE FILE
AS NOTED	HAMILTON 29
VERTICAL SCALE	DESIGNATION
AS NOTED	0902302
SURVEY BOOK	SHEETS
----	31 of 43
CONTRACT	PROJECT
R-38073	1401701

S:\2007Proj\2007-162\Plans\Bridge Plans\07-162 Screed Details.dwg, Screed 01, 4/17/2019 12:6:07 PM

SCREED ELEVATIONS

Point	LOCATION	1	2	3	4	5	6	7	8	9	10	11	12	13
A	Elevation - Top of Slab @ Coping	870.995	871.235	871.495	871.745	871.975	872.195	872.400	872.595	872.775	872.940	873.095	873.235	873.350
	Elevation - Top of Form													
	Elevation - Top of Beam to Top of Slab @ Coping													
B	Elevation - Top of Slab	871.025	871.270	871.530	871.775	872.010	872.230	872.435	872.625	872.805	872.975	873.125	873.265	873.380
	Elevation - Top of Form													
	Elevation - Top of Beam to top of Screed													
C	Elevation - Top of Slab	871.105	871.350	871.610	871.855	872.090	872.310	872.515	872.710	872.890	873.055	873.210	873.345	873.460
	Elevation - Top of Form													
	Elevation - Top of Beam to top of Screed													
D	Elevation - Top of Slab	871.200	871.445	871.705	871.950	872.185	872.405	872.610	872.805	872.985	873.150	873.300	873.440	873.555
	Elevation - Top of Form													
	Elevation - Top of Beam to top of Screed													
E	Elevation - Top of Slab	871.285	871.525	871.785	872.035	872.265	872.485	872.690	872.885	873.065	873.230	873.385	873.525	873.640
	Elevation - Top of Form													
	Elevation - Top of Beam to top of Screed													
F	Elevation - Top of Slab	871.380	871.620	871.880	872.130	872.360	872.580	872.785	872.980	873.160	873.325	873.480	873.620	873.735
	Elevation - Top of Form													
	Elevation - Top of Beam to top of Screed													
G	Elevation - Top of Slab	871.460	871.705	871.965	872.210	872.445	872.665	872.870	873.060	873.240	873.410	873.560	873.700	873.815
	Elevation - Top of Form													
	Elevation - Top of Beam to top of Screed													
H	Elevation - Top of Slab	871.555	871.800	872.060	872.305	872.540	872.760	872.965	873.155	873.335	873.505	873.655	873.795	873.910
	Elevation - Top of Form													
	Elevation - Top of Beam to top of Screed													
I	Elevation - Top of Slab	871.635	871.880	872.140	872.385	872.620	872.840	873.045	873.240	873.420	873.585	873.735	873.875	873.990
	Elevation - Top of Form													
	Elevation - Top of Beam to top of Screed													
J	Elevation - Top of Slab	871.730	871.975	872.235	872.480	872.715	872.935	873.140	873.335	873.515	873.680	873.835	873.970	874.085
	Elevation - Top of Form													
	Elevation - Top of Beam to top of Screed													
K	Elevation - Top of Slab	871.815	872.055	872.315	872.565	872.795	873.015	873.220	873.415	873.595	873.760	873.915	874.055	874.170
	Elevation - Top of Form													
	Elevation - Top of Beam to top of Screed													
L	Elevation - Top of Slab	871.910	872.150	872.410	872.660	872.890	873.110	873.315	873.510	873.690	873.855	874.010	874.150	874.265
	Elevation - Top of Form													
	Elevation - Top of Beam to top of Screed													
M	Elevation - Top of Slab	871.990	872.235	872.495	872.740	872.975	873.195	873.400	873.590	873.770	873.940	874.090	874.230	874.345
	Elevation - Top of Form													
	Elevation - Top of Beam to top of Screed													
N	Elevation - Top of Slab @ Long Chord	872.020	872.260	872.520	872.765	873.000	873.220	873.425	873.620	873.800	873.965	874.120	874.260	874.370
	Elevation - Top of Form													
	Elevation - Top of Beam to top of Screed													
O	Elevation - Top of Slab	871.950	872.195	872.455	872.700	872.935	873.155	873.360	873.550	873.730	873.900	874.050	874.190	874.305
	Elevation - Top of Form													
	Elevation - Top of Beam to top of Screed													
P	Elevation - Top of Slab	871.870	872.110	872.370	872.620	872.850	873.070	873.275	873.470	873.650	873.815	873.970	874.110	874.225
	Elevation - Top of Form													
	Elevation - Top of Beam to top of Screed													
Q	Elevation - Top of Slab	871.775	872.015	872.275	872.525	872.755	872.975	873.180	873.375	873.555	873.720	873.875	874.015	874.130
	Elevation - Top of Form													
	Elevation - Top of Beam to top of Screed													
R	Elevation - Top of Slab @ Construction Jt	871.740	871.985	872.245	872.490	872.725	872.945	873.150	873.340	873.520	873.690	873.840	873.980	874.095
	Elevation - Top of Form													
	Elevation - Top of Beam to top of Screed													
S	Elevation - Top of Slab	871.690	871.935	872.195	872.440	872.675	872.895	873.100	873.295	873.475	873.640	873.795	873.930	874.045
	Elevation - Top of Form													
	Elevation - Top of Beam to top of Screed													
T	Elevation - Top of Slab	871.605	871.850	872.110	872.355	872.590	872.810	873.015	873.210	873.390	873.555	873.710	873.845	873.960
	Elevation - Top of Form													
	Elevation - Top of Beam to Top of Screed													
U	Elevation - Top of Slab	871.525	871.770	872.030	872.275	872.510	872.730	872.935	873.125	873.305	873.475	873.625	873.765	873.880
	Elevation - Top of Form													
	Elevation - Top of Beam to top of Screed													
V	Elevation - Top of Slab	871.440	871.685	871.945	872.190	872.425	872.645	872.850	873.040	873.220	873.390	873.540	873.680	873.795
	Elevation - Top of Form													
	Elevation - Top of Beam to top of Screed													
W	Elevation - Top of Slab	871.360	871.600	871.860	872.110	872.340	872.560	872.765	872.960	873.140	873.305	873.460	873.600	873.715
	Elevation - Top of Form													
	Elevation - Top of Beam to top of Screed													
X	Elevation - Top of Slab	871.275	871.515	871.775	872.025	872.255	872.475	872.680	872.875	873.055	873.220	873.375	873.515	873.630
	Elevation - Top of Form													
	Elevation - Top of Beam to top of Screed													
Y	Elevation - Top of Slab	871.190	871.435	871.695	871.940	872.175	872.395	872.600	872.795	872.975	873.140	873.295	873.430	873.545
	Elevation - Top of Form													
	Elevation - Top of Beam to top of Screed													
Z	Elevation - Top of Slab	871.105	871.350	871.610	871.855	872.090	872.310	872.515	872.710	872.890	873.055	873.210	873.345	873.460
	Elevation - Top of Form													
	Elevation - Top of Beam to top of Screed													
AA	Elevation - Top of Slab	871.025	871.270	871.530	871.775	872.010	872.230	872.435	872.625	872.805	872.975	873.125	873.265	873.380
	Elevation - Top of Form													
	Elevation - Top of Beam to top of Screed													
AB	Elevation - Top of Slab @ Coping	870.995	871.235	871.495	871.745	871.975	872.195	872.405	872.595	872.775	872.940	873.095	873.235	873.350
	Elevation - Top of Form													
	Elevation - Top of Beam to top of Screed													

NOT FOR CONSTRUCTION

DESIGNED: BLM DRAWN: DWB

CHECKED: MJH CHECKED: BLM

INDIANA
DEPARTMENT OF TRANSPORTATION

SCREED DETAILS

HORIZONTAL SCALE	BRIDGE FILE
NONE	HAMILTON 29
VERTICAL SCALE	DESIGNATION
NONE	0902302
SURVEY BOOK	SHEETS
----	32 of 43
CONTRACT	PROJECT
R-38073	1401701

S:\2007Proj\2007-162\Plans\Bridge Plans\07-162 Screed Details.dwg, Screed 02, 4/12/2019 12:24:14 PM

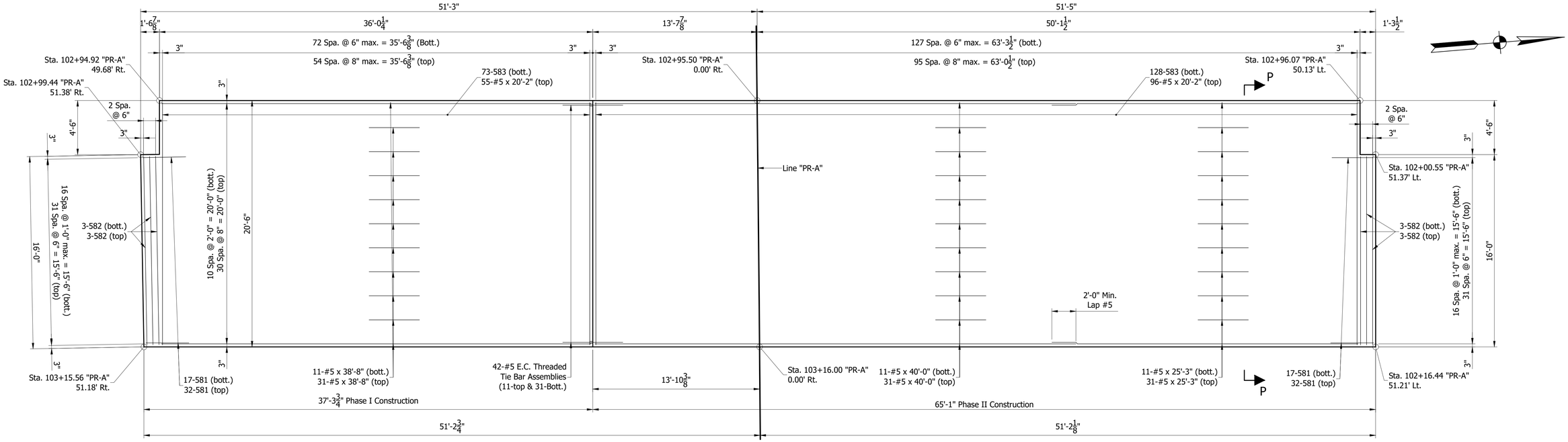

WEST APPROACH SLAB PLAN
SHOWING TOP & BOTTOM REINFORCING

Scale: 1/4"=1'-0"

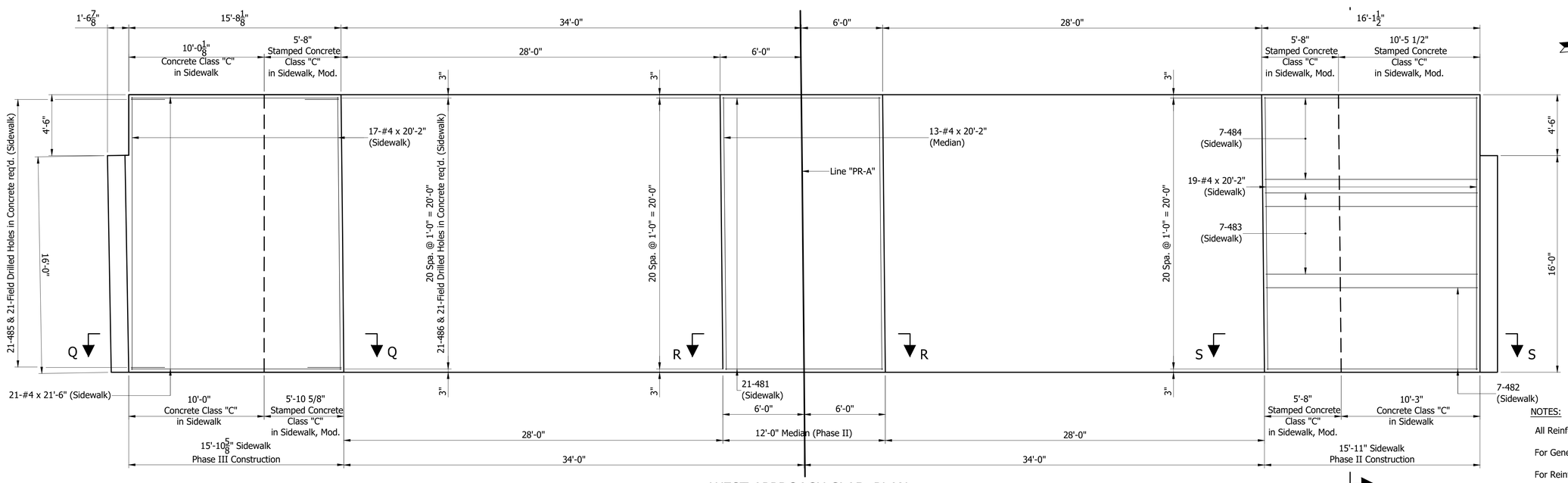

WEST APPROACH SLAB PLAN
SHOWING SIDEWALK & MEDIAN REINFORCING

Scale: 1/4"=1'-0"

NOTES:

All Reinforcing Steel to be Epoxy Coated in Approach Slabs.

For General Notes, see Sheet No. 17

For Reinforcing Bar Notes, see Standard Dwg. E703-BRST-01.

For additional Approach Slab Details, see Sheet Nos. 34, 35 & 36.

Field drilled holes in concrete shall extend into concrete with an approved anchor system. Minimum pullout force for #4 bar = 12,000 lbs.

NOT FOR CONSTRUCTION

DESIGNED: BLM	DRAWN: DWB
CHECKED: MJH	CHECKED: BLM

INDIANA
DEPARTMENT OF TRANSPORTATION

APPROACH SLAB DETAILS

HORIZONTAL SCALE	BRIDGE FILE
AS NOTED	HAMILTON 29
VERTICAL SCALE	DESIGNATION
AS NOTED	0902302

SURVEY BOOK	SHEETS		
----	33	of	43
CONTRACT	PROJECT		
R-38073	1401701		

S:\2007Proj\2007-162\Plans\Bridge Plans\07-162 Approach Slabs.dwg, Appr 01, 4/12/2019 12:38:22 PM

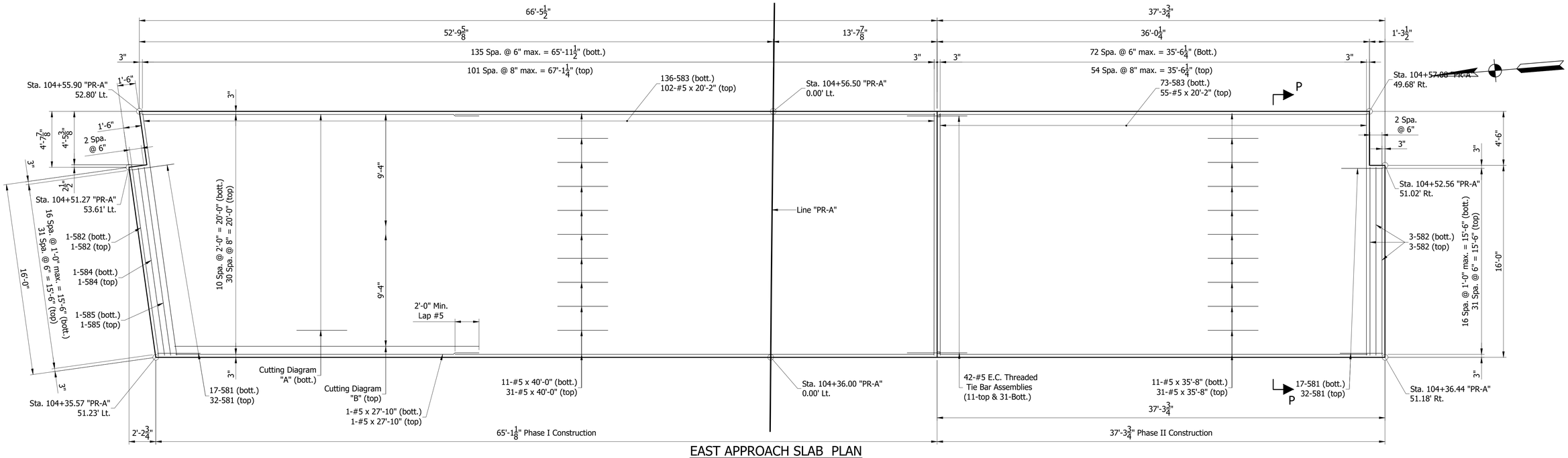

EAST APPROACH SLAB PLAN
SHOWING TOP & BOTTOM REINFORCING

Scale: 1/4"=1'-0"

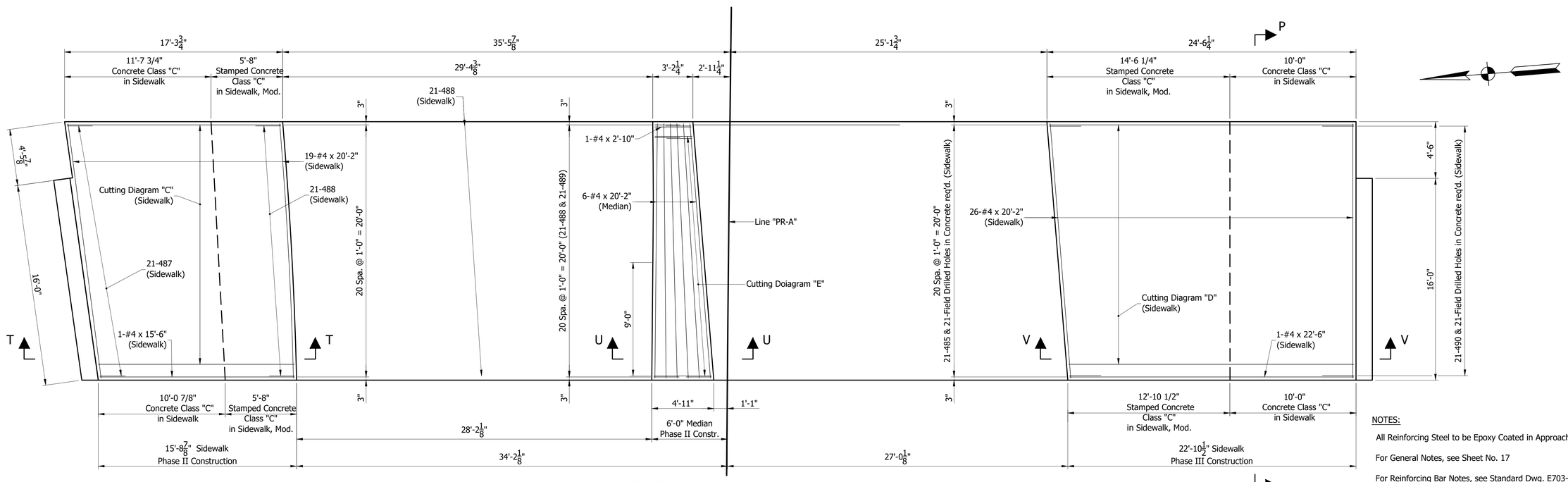

EAST APPROACH SLAB PLAN
SHOWING SIDEWALK & MEDIAN REINFORCING

Scale: 1/4"=1'-0"

NOTES:

All Reinforcing Steel to be Epoxy Coated in Approach Slabs.

For General Notes, see Sheet No. 17

For Reinforcing Bar Notes, see Standard Dwg. E703-BRST-01.

For additional Approach Slab Details, see Sheet Nos. 33, 35 & 36.

Field drilled holes in concrete shall extend into concrete with an approved anchor system. Minimum pullout force for #4 bar = 12,000 lbs.

NOT FOR CONSTRUCTION

DESIGNED: BLM | DRAWN: DWB
CHECKED: MJH | CHECKED: BLM

INDIANA
DEPARTMENT OF TRANSPORTATION

APPROACH SLAB DETAILS

HORIZONTAL SCALE	BRIDGE FILE
AS NOTED	HAMILTON 29
VERTICAL SCALE	DESIGNATION
AS NOTED	0902302

SURVEY BOOK	SHEETS
----	34 of 43
CONTRACT	PROJECT
R-38073	1401701

S:\2007Proj\2007-162\Plans\Bridge Plans\07-162 Approach Slabs.dwg, Appr 02, 4/12/2019 12:39:01 PM

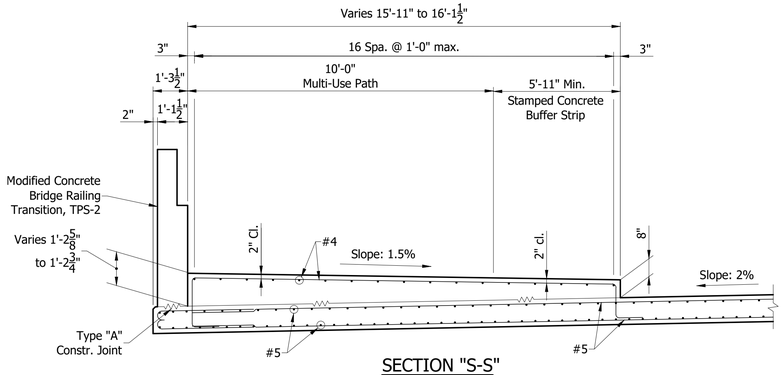

SECTION "S-S"
Scale: 3/8" = 1'-0"

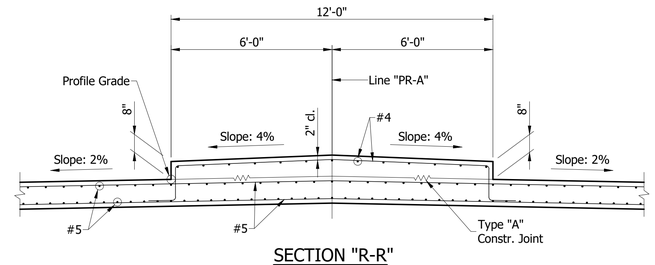

SECTION "R-R"
Scale: 3/8" = 1'-0"

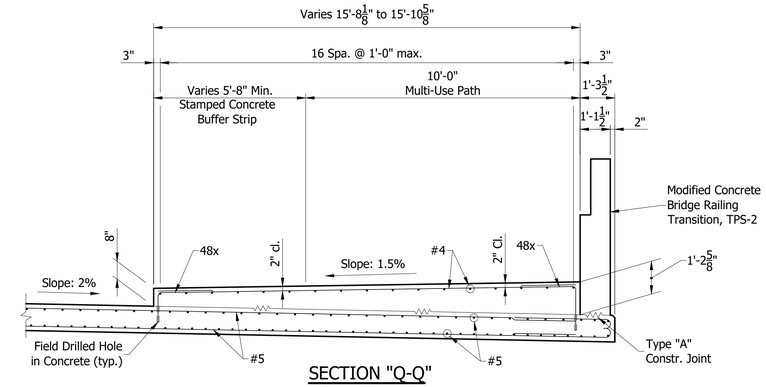

SECTION "Q-Q"
Scale: 3/8" = 1'-0"

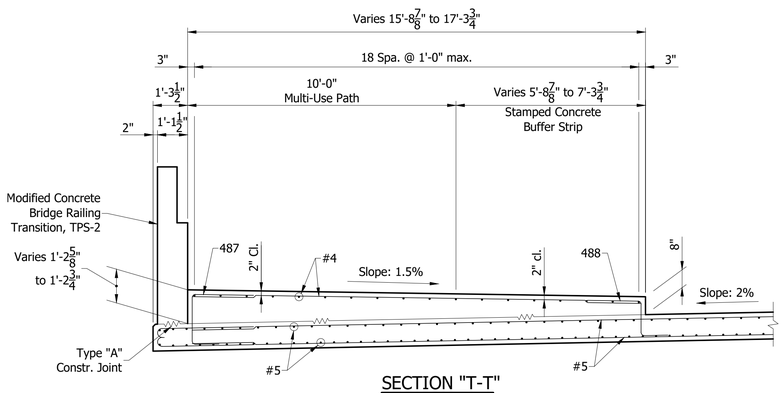

SECTION "T-T"
Scale: 3/8" = 1'-0"

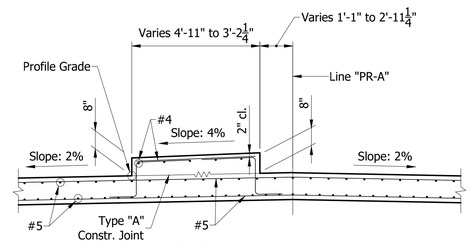

SECTION "U-U"
Scale: 3/8" = 1'-0"

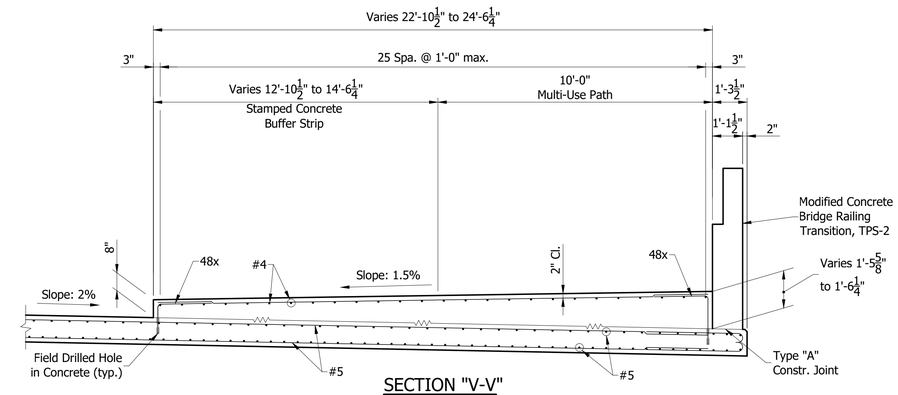

SECTION "V-V"
Scale: 3/8" = 1'-0"

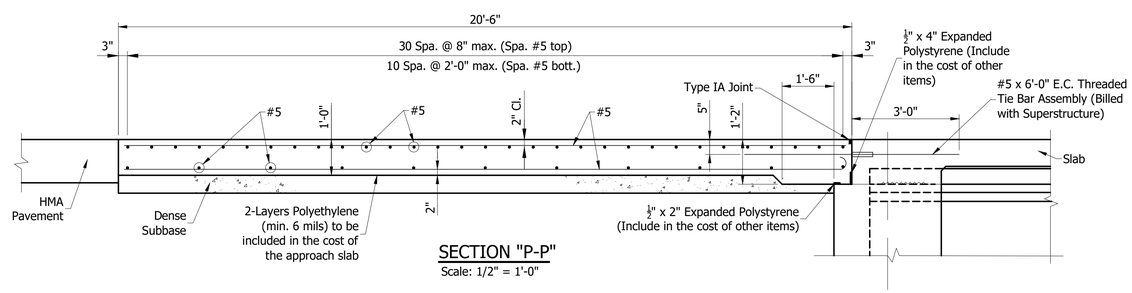

SECTION "P-P"
Scale: 1/2" = 1'-0"

NOTES:

All Reinforcing Steel to be Epoxy Coated in Approach Slabs.

For General Notes, see Sheet No. 17

For Reinforcing Bar Notes, see Standard Dwg. E703-BRST-01.

For additional Approach Slab Details, see Sheet Nos. 33, 34 & 36.

Field drilled holes in concrete shall extend into concrete with an approved anchor system. Minimum pullout force for #4 bar = 12,000 lbs.

NOT FOR CONSTRUCTION

DESIGNED: BLM
DRAWN: DWB
CHECKED: MJH
CHECKED: BLM

INDIANA
DEPARTMENT OF TRANSPORTATION

APPROACH SLAB DETAILS

HORIZONTAL SCALE	BRIDGE FILE
AS NOTED	HAMILTON 29
VERTICAL SCALE	DESIGNATION
AS NOTED	0902302

SURVEY BOOK	SHEETS
----	35 of 43
CONTRACT	PROJECT
R-38073	1401701

S:\2007Proj\2007-162\Plans\Bridge Plans\07-162 Approach Slabs.dwg, Apr 03, 4/12/2019 12:39:45 PM

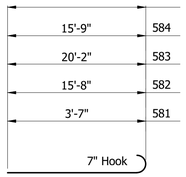

581 x 4'-2"
582 x 16'-3"
583 x 20'-9"
584 x 16'-4"
585 x 16'-5"

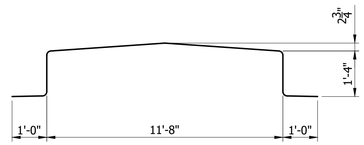

481 x 16'-4"

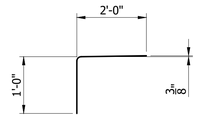

485 x 3'-0"

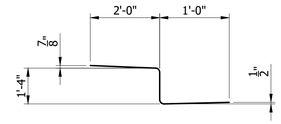

488 x 4'-4"

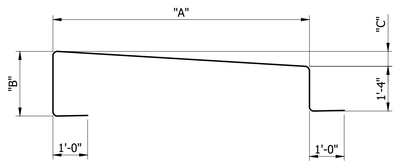

482 thru 484

Mark	"A"	"B"	"C"	Total Length
482	15'-7"	1'-10 1/2"±	6 1/2"±	20'-10 1/2"
483	15'-8"	1'-10 5/8"±	6 5/8"±	21'-0 5/8"
484	15'-9"	1'-10 5/8"±	6 5/8"±	21'-1 5/8"

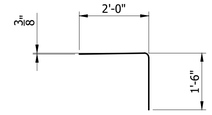

486 x 3'-6"

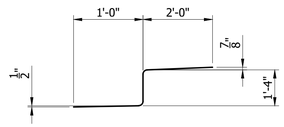

489 x 4'-4"

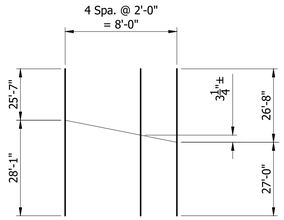

CUTTING DIAGRAM "A"
1-#5 x 53'-8" makes two bars
5-#5 x 53'-8" req'd.

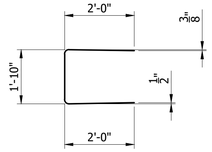

487 x 5'-10"

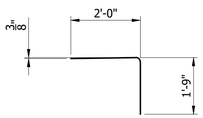

490 x 3'-9"

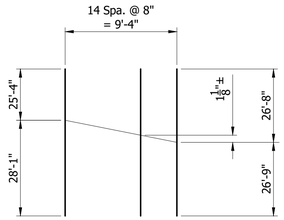

CUTTING DIAGRAM "B"
1-#5 x 53'-5" req'd.
15-#5 x 53'-5" req'd.

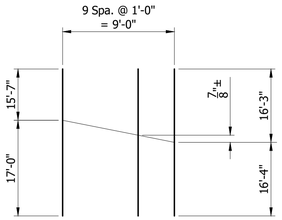

CUTTING DIAGRAM "C"
1-#4 x 32'-7" makes two bars
10-#4 x 32'-7" req'd.

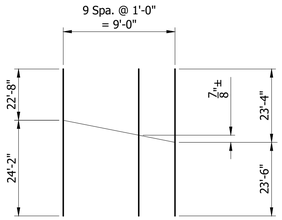

CUTTING DIAGRAM "D"
1-#4 x 46'-10" makes two bars
10-#4 x 46'-10" req'd.

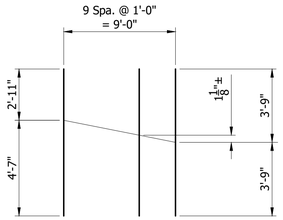

CUTTING DIAGRAM "E"
1-#4 x 6'-6" makes two bars
10-#4 x 6'-6" req'd.

BAR BENDING DETAILS
No Scale

BILL OF MATERIALS WEST APPROACH SLAB

EPOXY COATED REINFORCING STEEL			
Size or Mark	No. of Bars	Length	Weight (lbs)
581	98	3'-2"	
582	12	16'-3"	
583	201	20'-9"	
#5	42	40'-0"	
#5	42	38'-8"	
#5	42	25'-3"	
#5	151	20'-2"	
		Total #5	12,708 lbs.
481	21	16'-4"	
482	7	20'-11 1/2"	
483	7	21'-1 5/8"	
484	7	21'-2 5/8"	
485	21	3'-0"	
486	21	3'-6"	
#4	21	21'-6"	
#4	49	20'-2"	
		Total #4	1577 lbs.
Total E.C. Reinforcing Steel			14,285 lbs.
CONCRETE			
Concrete Class "C" in Sidewalk			22.6 cys
Concrete Class "C" in Sidewalk, Modified			11.8 cys
MISCELLANEOUS			
Surface Seal			2090 sft.
Field Drilled Holes in Concrete			42 each
E.C. Threaded Tie Bar Assemblies			42 each
R.C. Bridge Appr, 12"			233 sys.

BILL OF MATERIALS EAST APPROACH SLAB

EPOXY COATED REINFORCING STEEL			
Size or Mark	No. of Bars	Length	Weight (lbs)
581	98	4'-2'	
582	8	16'-3"	
583	209	20'-9"	
584	2	16'-4"	
585	2	16'-5"	
#5	5	53'-8"	
#5	15	53'-5"	
#5	42	40'-0"	
#5	42	35'-8"	
#5	2	27'-10"	
#5	157	20'-2"	
		Total #5	12,944 lbs.
485	21	3'-0"	
487	21	5'-10"	
488	42	4'-4"	
489	21	4'-4"	
490	21	3'-9"	
#4	10	46'-10"	
#4	10	32'-7"	
#4	1	22'-6"	
#4	51	20'-2"	
#4	1	15'-6"	
#4	1	6'-6"	
#4	1	2'-10"	
		Total #4	1647 lbs.
Total E.C. Reinforcing Steel			14,591 lbs.
CONCRETE			
Concrete Class "C" in Sidewalk			20.6 cys
Concrete Class "C" in Sidewalk, Modified			12.9 cys
MISCELLANEOUS			
Surface Seal			2117 sft.
Field Drilled Holes in Concrete			42 each
E.C. Threaded Tie Bar Assemblies			42 each
R.C. Bridge Appr, 12"			236 sys.

NOTES:

All Reinforcing Steel to be Epoxy Coated in Approach Slabs.

For General Notes, see Sheet No. 17

For Reinforcing Bar Notes, see Standard Dwg. E703-BRST-01.

For additional Approach Slab Details, see Sheet Nos. 33, 34 & 35.

Field drilled holes in concrete shall extend into concrete with an approved anchor system. Minimum pullout force for #4 bar = 12,000 lbs.

NOT FOR CONSTRUCTION

DESIGNED: BLM DRAWN: DWB
CHECKED: MJH CHECKED: BLM

INDIANA
DEPARTMENT OF TRANSPORTATION

APPROACH SLAB DETAILS

HORIZONTAL SCALE	BRIDGE FILE
AS NOTED	HAMILTON 29
VERTICAL SCALE	DESIGNATION
AS NOTED	0902302

SURVEY BOOK	SHEETS
----	36 of 43
CONTRACT	PROJECT
R-38073	1401701

S:\2007Proj\2007-1623\Plans\Bridge Plans\07-1623 Approach Slabs.dwg, Apr 04, 4/12/2019 12:40:17 PM

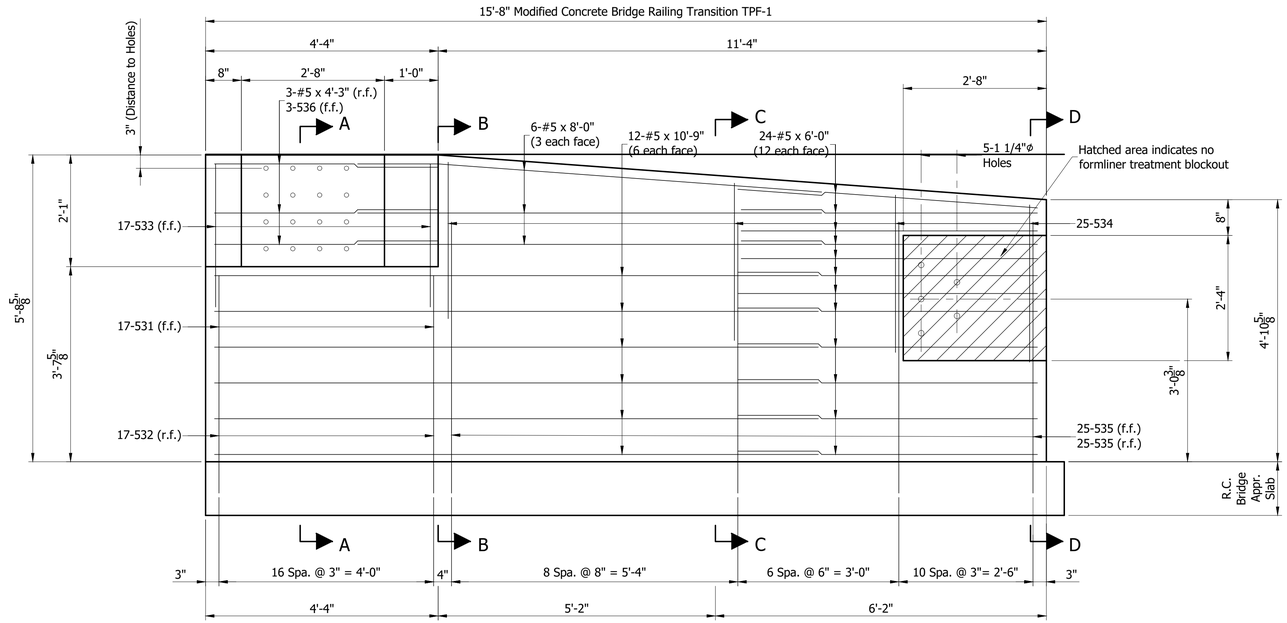

ELEVATION
NE & SW TRANSITIONS SHOWN
NW SAME BY OPPOSITE HAND

Scale: 3/4" = 1'-0"

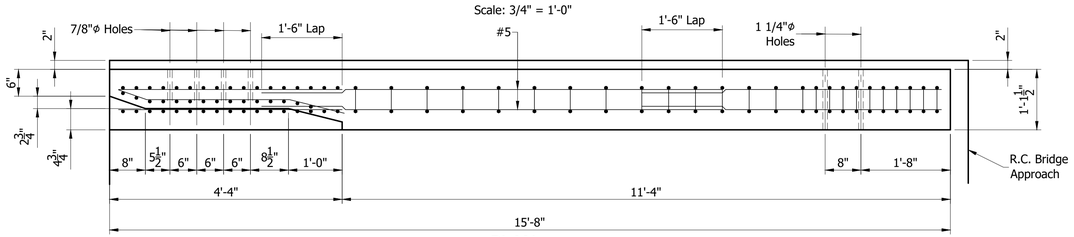

PLAN

Scale: 3/4" = 1'-0"

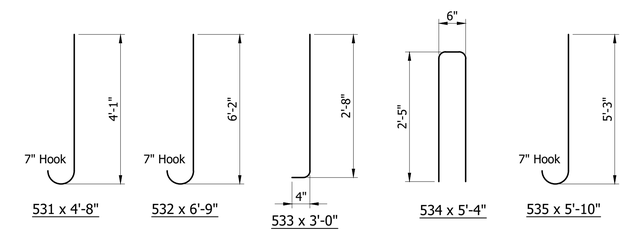

531 x 4'-8" | 532 x 6'-9" | 533 x 3'-0" | 534 x 5'-4" | 535 x 5'-10"

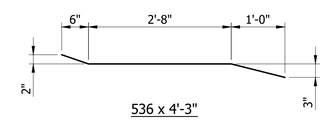

536 x 4'-3"

BAR BENDING DETAILS

No Scale

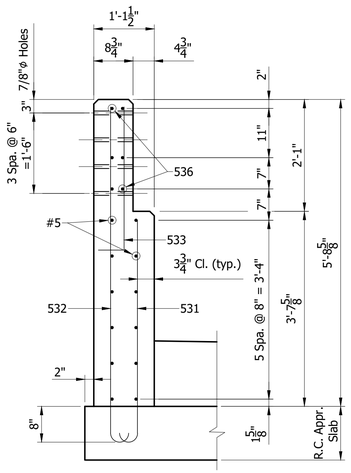

SECTION A-A

Scale: 3/4" = 1'-0"

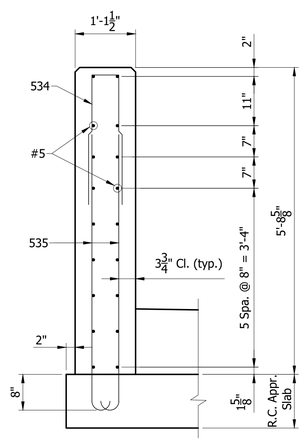

SECTION B-B

Scale: 3/4" = 1'-0"

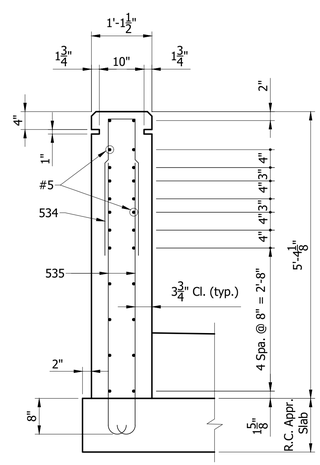

SECTION C-C

Scale: 3/4" = 1'-0"

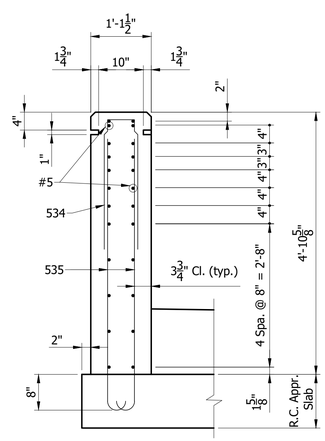

SECTION D-D

Scale: 3/4" = 1'-0"

NOTE:
All Concrete Bridge Railing and Transitions to receive an Architectural Relief Treatment resembling Dry Stacked Stone on both faces, see special Provisions.

NOTES:

All Reinforcing Steel to be epoxy coated in Concrete Bridge Railing Transitions.

For Attachment of Guardrail Transition, see Standard Drawing E706-CBRT-04.

Holes for attachment of steel bridge railing type TPS-2. See Standard Drawing E706-BRPP-04 for details.

For Reinforcing Bar Notes, see Standard Drawing E-703-BRST-01.

For General Notes, See Sheet No. 17

All chamfered edges shall be 3/4".

BILL OF MATERIALS MODIFIED CONCRETE BRIDGE RAILING TRANSITION, TPS-2
NE TRANSITION SHOWN
NW TRANSITION SAME

EPOXY COATED REINFORCING STEEL			
Size or Mark	No. of Bars	Length	Weight (lbs)
531	17	4'-8"	
532	17	6'-9"	
533	17	3'-0"	
534	25	5'-4"	
535	50	5'-10"	
536	3	4'-3"	
#5	12	10'-9"	
#5	6	8'-0"	
#5	24	6'-0"	
#5	3	4'-3"	
Total E.C. Reinforcing Steel			1060 lbs
CONCRETE			
Class "C" Concrete in Railing			3.5 cys
MISCELLANEOUS			
Surface Seal			206 sft

NOT FOR CONSTRUCTION

DESIGNED: BLM | DRAWN: DWB
CHECKED: MJH | CHECKED: BLM

INDIANA
DEPARTMENT OF TRANSPORTATION

MODIFIED CONCRETE BRIDGE RAILING TRANSITION, TPS-2

HORIZONTAL SCALE	BRIDGE FILE
AS NOTED	HAMILTON 29
VERTICAL SCALE	DESIGNATION
AS NOTED	0902302

SURVEY BOOK	SHEETS		
----	37	of	43
CONTRACT	PROJECT		
R-38073	1401701		

S:\2003Proj\0007-162\Plans\Bridge Plans\07-162 Modified TPS-2 Transition.dwg, Transition Details 01, 4/17/2019 1:27:39 PM

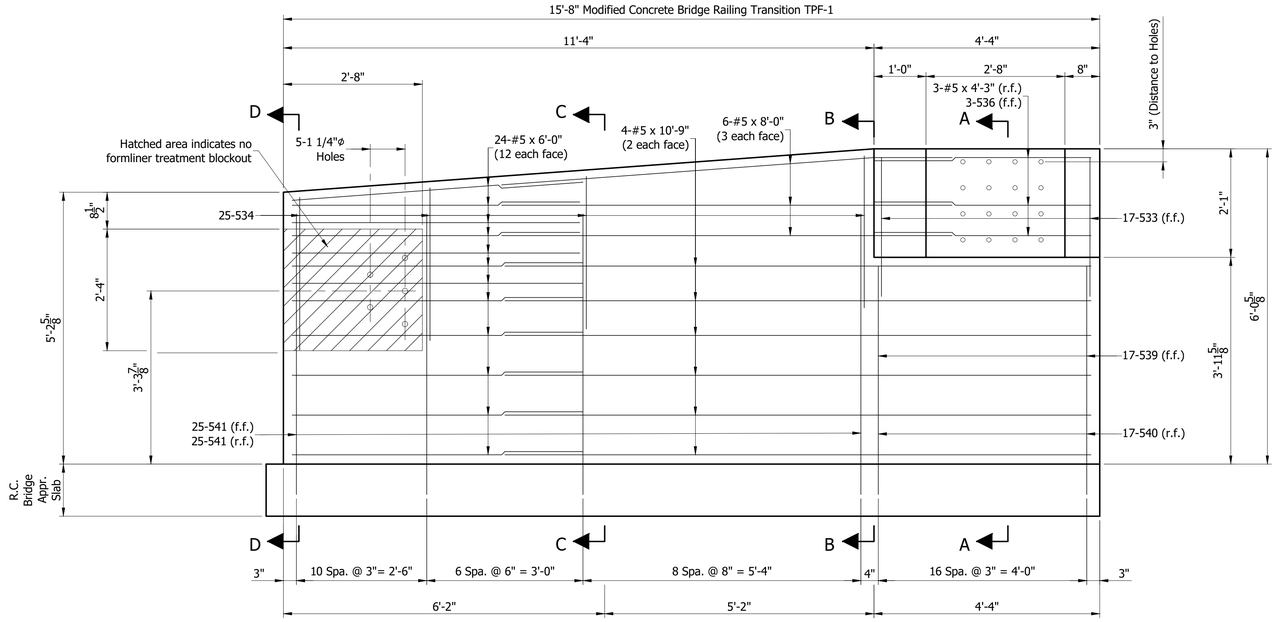

ELEVATION-SOUTHEAST TRANSITION

Scale: 3/4" = 1'-0"

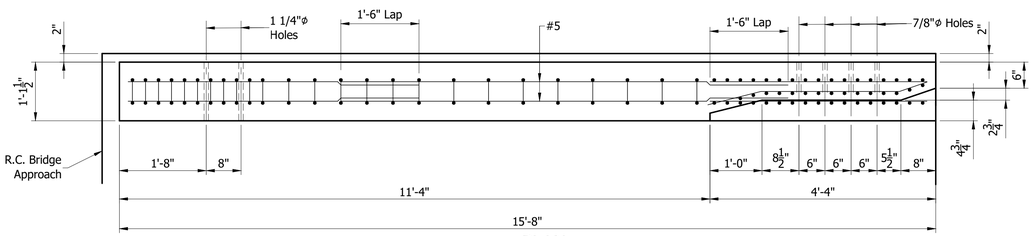

PLAN

Scale: 3/4" = 1'-0"

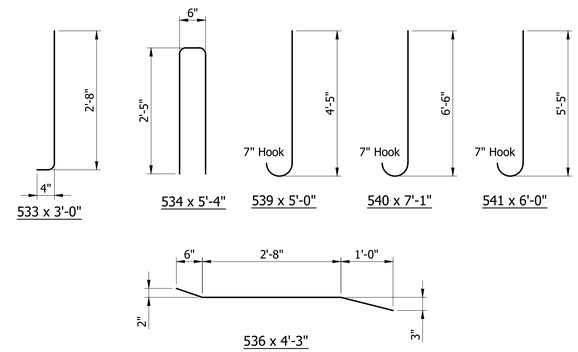

BAR BENDING DETAILS

No Scale

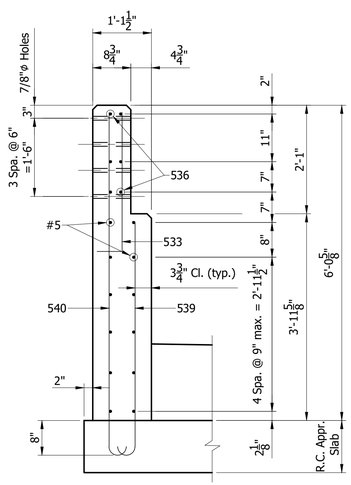

SECTION A-A

Scale: 3/4" = 1'-0"

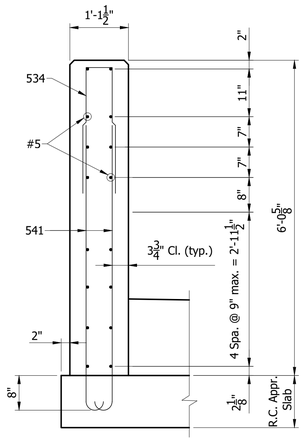

SECTION B-B

Scale: 3/4" = 1'-0"

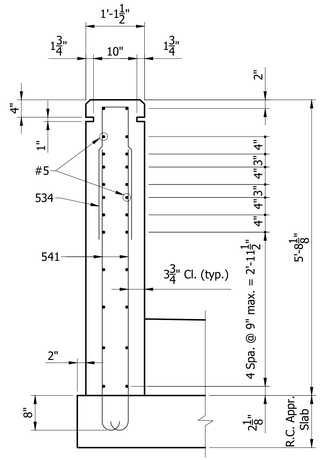

SECTION C-C

Scale: 3/4" = 1'-0"

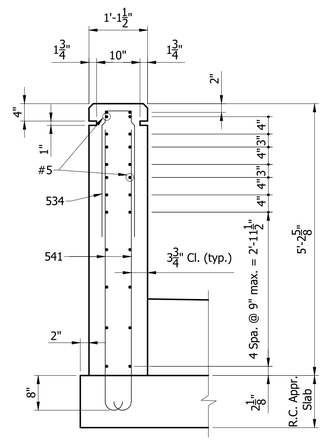

SECTION D-D

Scale: 3/4" = 1'-0"

NOTE:
All Concrete Bridge Railing and Transitions to receive an Architectural Relief Treatment resembling a Dry Sierra Stocked Stone on both faces, see special Provisions.

NOTES:

All Reinforcing Steel to be epoxy coated in Concrete Bridge Railing Transitions.

For Attachment of Guardrail Transition, see Standard Drawing E706-CBRT-04.

Holes for attachment of steel bridge railing type TPS-2. See Standard Drawing E706-BRPP-04 for details.

For Reinforcing Bar Notes, see Standard Drawing E-703-BRST-01.

For General Notes, See Sheet No. 17

All chamfered edges shall be 3/4".

BILL OF MATERIALS MODIFIED CONCRETE BRIDGE RAILING TRANSITION, TPS-2 SOUTHEAST TRANSITION SHOWN SOUTHWEST TRANSITION SAME

EPOXY COATED REINFORCING STEEL			
Size or Mark	No. of Bars	Length	Weight (lbs)
533	17	3'-0"	
534	25	5'-4"	
536	3	4'-3"	
539	17	5'-0"	
540	17	7'-1"	
541	50	6'-0"	
#5	12	10'-9"	
#5	6	8'-0"	
#5	24	6'-0"	
#5	3	4'-3"	
Total E.C. Reinforcing Steel			1081 lbs
CONCRETE			
Class "C" Concrete in Railing			3.7 cys
MISCELLANEOUS			
Surface Seal			212 sft

NOT FOR CONSTRUCTION

DESIGNED: BLM	DRAWN: DWB
CHECKED: MJH	CHECKED: BLM

INDIANA
DEPARTMENT OF TRANSPORTATION

MODIFIED CONCRETE BRIDGE RAILING TRANSITION, TPS-2

HORIZONTAL SCALE	BRIDGE FILE
AS NOTED	HAMILTON 29
VERTICAL SCALE	DESIGNATION
AS NOTED	0902302
SURVEY BOOK	SHEETS
----	38 of 43
CONTRACT	PROJECT
R-38073	1401701

S:\2007Proj\2007-162\Plans\Bridge Plans\07-162 Modified TPS-2 Transition.dwg, Transition Details 02, 4/12/2019 12:41:58 PM

SUMMARY OF BRIDGE QUANTITIES

ITEM	CONCRETE CLASS C SUPERSTR	CONCRETE CLASS C SUPERSTR MODIFIED	CONCRETE CLASS C IN SIDEWALK	CONCRETE CLASS C IN SIDEWALK MODIFIED	CONCRETE RAILING CLASS C	EPOXY COATED REINF. STEEL	PILES HP12 X 74 STEEL "H" PILES		PILES TEST PILE DYNAMIC PRODUCTION HP12 X 74		PILES TEST PILE DYNAMIC RESTRIKE	PILES DYNAMIC PILE LOAD TEST	PILES PREBORED HOLE, 21"ø		SURFACE SEAL **	DENSE GRADED SUBBASE	R.C. BRIDGE APPROACH (12")	FIELD DRILLED HOLES IN CONCRETE	PATCHING CONCRETE STRUCTURES	CONC. STR. MEMBERS BULB-TEE 54" X 61"	CONC. STR. MEMBERS I-BEAMS TYPE XX	CAST IRON GRATES, BASINS & FITTINGS	CAST IRON DRAIN PIPE, 6"ø	EPOXY COATED THREADED TIE BAR ASSEMBLIES	RAILING PF-2	MODIFIED CONCRETE BRIDGE RAILING TRANSITION, TPS-2	FOUNDATION EXCAVATION
	cys	cys	cys	cys	cys	lbs.	no.	lft.	no.	lft.	each	each	no.	lft.	sft.	cys.	sys.	each	sft.	lft.	lft.	lbs.	lbs.	each	lft.	each	cys.
SUPERSTRUCTURE	601.7	51.0			38.7	96,127									xx			242		1428				502	257		
BENT NO. 1	55.4					8659	14	742	1	63	1	1	15	545	xx			42						15			190
BENT NO. 2	55.4					8659	14	770	1	65	1	1	15	581	xx			42						15			144
WEST APPROACH SLAB			22.6	11.8		16,486									xx	39	233							42		2	
EAST APPROACH SLAB			20.6	12.9		16,732									xx	40	236							42		2	
TOTALS	712.5	51.0	43.2	24.7	38.7	146,603	28	1512	2	128	2	2	30	1126	xx	79	569	326		1428				616	257	4	334

** ESTIMATED QUANTITY

APPROACH STRUCTURES

STRUCTURE NUMBER	LOCATION STATION	LOCATION LEFT	LOCATION RIGHT	LOCATION CROSS	SIZE	DESCRIPTION TYPE	DESCRIPTION KIND	LENGTH	SKEW	FLOW LINE COVER	FLOW LINE UP STREAM	FLOW LINE DOWN STREAM	BACKFILL TYPE	STRUCTURE BACKFILL	REVETMENT RIPRAP	CONCRETE CLASS "A"	PIPE END SECTION	AGGREGATE FOR END BENT BACKFILL	GEOTEXTILE FOR SUBGRADE TYPE 2A	GRATED BOX END SECTION type	GRATED BOX END SECTION slope	CONNECT TO STR.	REMARKS
					inches			lft.		ft.	elev.	elev.		cys.	tons	cys.	ea.	cys.	sys.	type	slope		
21A	103+15 "PR-A"			X	6		End Bent Drain Pipe	110			861.8	861.3						82	151				
21B	104+37 "PR-A"			X	6		End Bent Drain Pipe	110			864.2	863.7						82	151				

GUARDRAIL SUMMARY TABLE

LOCATION FROM STATION	LOCATION TO STATION	LEFT	MEDIAN LEFT	MEDIAN RIGHT	RIGHT	GUARDRAIL, MGS, W-BEAM, 6'-3" POST SPACING	MODIFIED W-BEAM GUARDRAIL 6.25 FT. SPA., (17' RAD.)	GUARDRAIL, MGS TRANSITION, WITHOUT CURB	MOD. GUARDRAIL, MGS TRANSITION, WITHOUT CURB	W-BEAM GUARDRAIL SYSTEM TYPE 1	GUARDRAIL END TREATMENT, TYPE OS	MOD. GUARDRAIL END TREATMENT, TYPE OS
						LFT	LFT	EACH	EACH	EACH	EACH	EACH
102+09.76	103+00.39				X			1			1	
104+50.37	105+41				X				1			1
TOTALS								1	1		1	1

NOT FOR CONSTRUCTION

DESIGNED: MKT DRAWN: DWB

CHECKED: MJH CHECKED: BLM

INDIANA
DEPARTMENT OF TRANSPORTATION

BRIDGE SUMMARY

HORIZONTAL SCALE	BRIDGE FILE
NONE	HAMILTON 29
VERTICAL SCALE	DESIGNATION
NONE	0902302

SURVEY BOOK	SHEETS		
----	39	of	43
CONTRACT	PROJECT		
R-38073	1401701		

S:\2017Proj\2017-162\Plans\Bridge Plans\07-162 Summary Sheet.dwg, Bridge Summary, 4/17/2019 12:29:41 PM

102+50

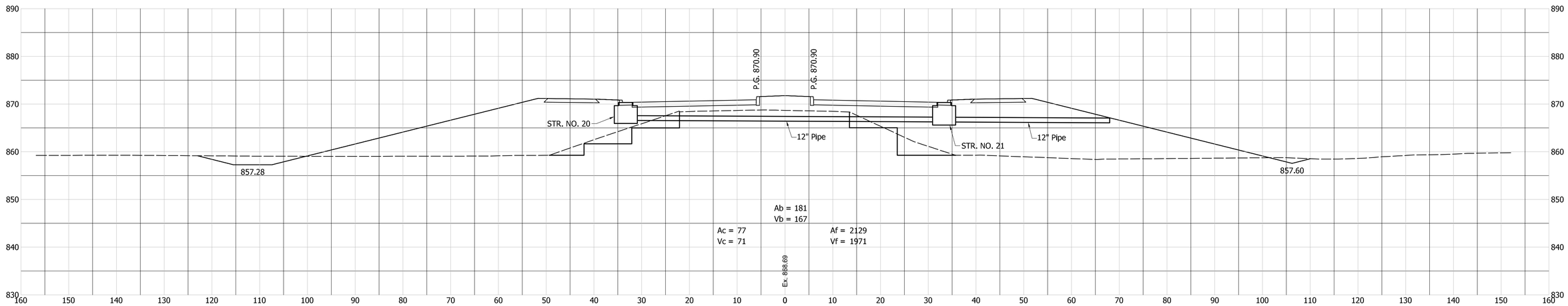

102+00

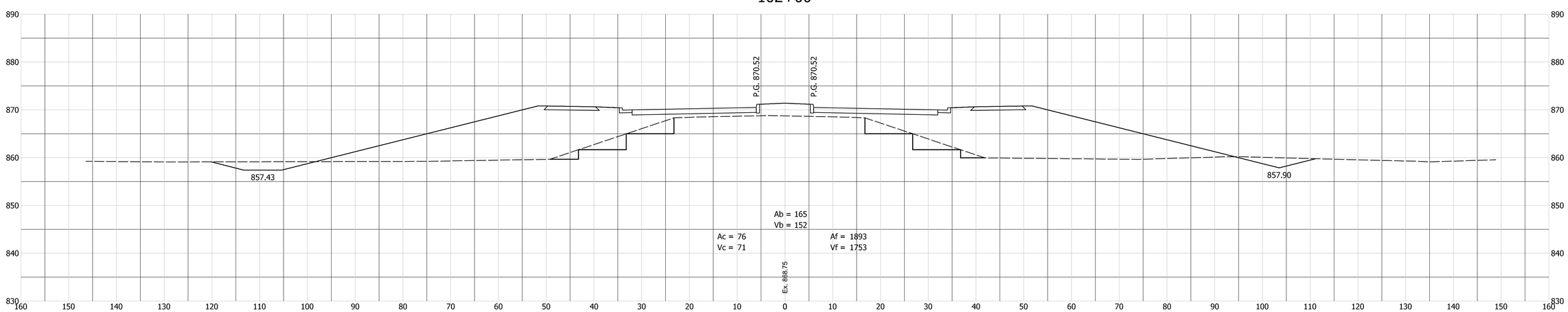

FOR INFORMATION ONLY

NOT FOR CONSTRUCTION

DESIGNED: JGP
DRAWN: JGP
CHECKED: MPB
CHECKED: MPB

INDIANA
DEPARTMENT OF TRANSPORTATION

CROSS SECTIONS
LINE "PR-A"

HORIZONTAL SCALE	BRIDGE FILE
1" = 10'	
VERTICAL SCALE	DESIGNATION
1" = 10'	1401701
SURVEY BOOK	SHEETS
	40 of 43
CONTRACT	PROJECT
R-38073	1401701

S:\2007Proj\2007-1620\Plans\Bridge Plans\07-1620 Cross Sections-PR6 (INFO ONLY).dwg, Section Sheet - (50), 4/18/2019 8:09:26 AM

104+00

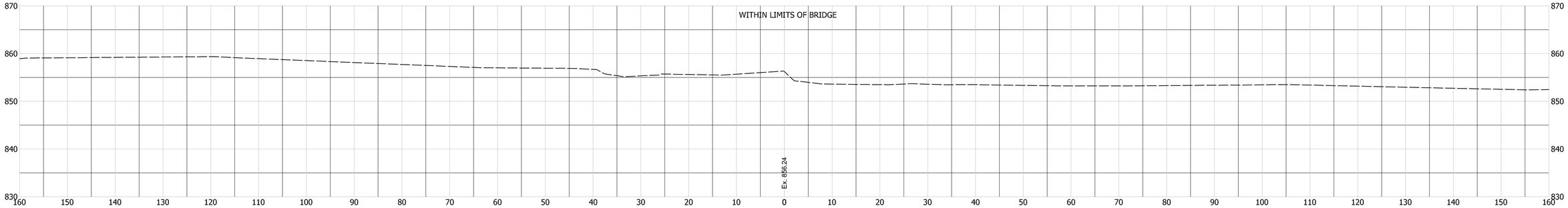

103+50

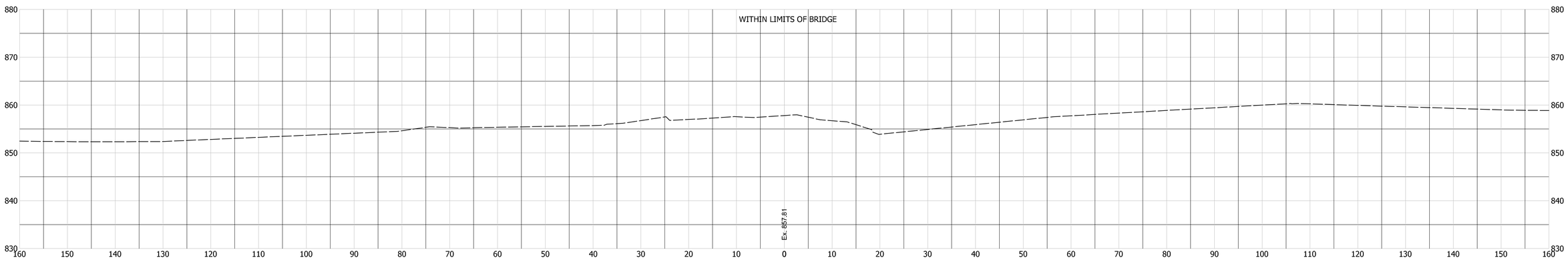

103+00

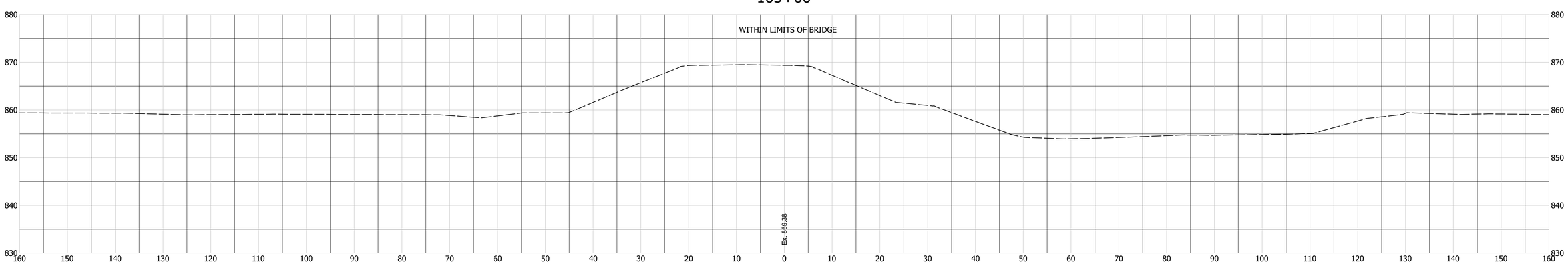

BEGIN PAVING EXCEPTION
STA. 102+95.50 "PR-A"

Ac = 66 Af = 2326
Vc = 55 Vf = 1960

FOR INFORMATION ONLY

NOT FOR CONSTRUCTION

DESIGNED: JGP DRAWN: JGP
CHECKED: MPB CHECKED: MPB

INDIANA
DEPARTMENT OF TRANSPORTATION

CROSS SECTIONS
LINE "PR-A"

HORIZONTAL SCALE	BRIDGE FILE
1" = 10'	
VERTICAL SCALE	DESIGNATION
1" = 10'	1401701
SURVEY BOOK	SHEETS
	41 of 43
CONTRACT	PROJECT
R-38073	1401701

S:\2007Proj\2007-102\Plans\Bridge Plans\07-102 Cross Sections-PR6 (INFO ONLY)Ang. Section Sheet - (07), 4/18/2019 8:10:52 AM

105+00

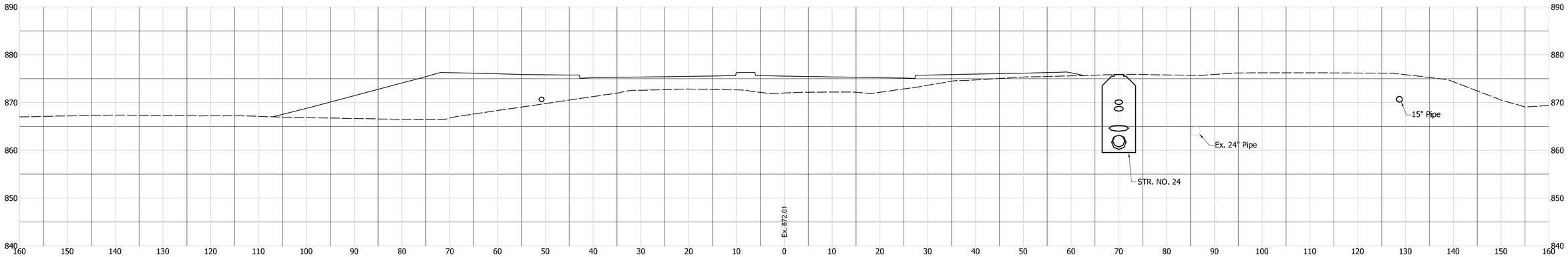

END PAVING EXCEPTION
STA. 104+56.50 "PR-A"
(Roundabout Sections Shown for Information Only
See Roundabout Grading Plans)

104+50

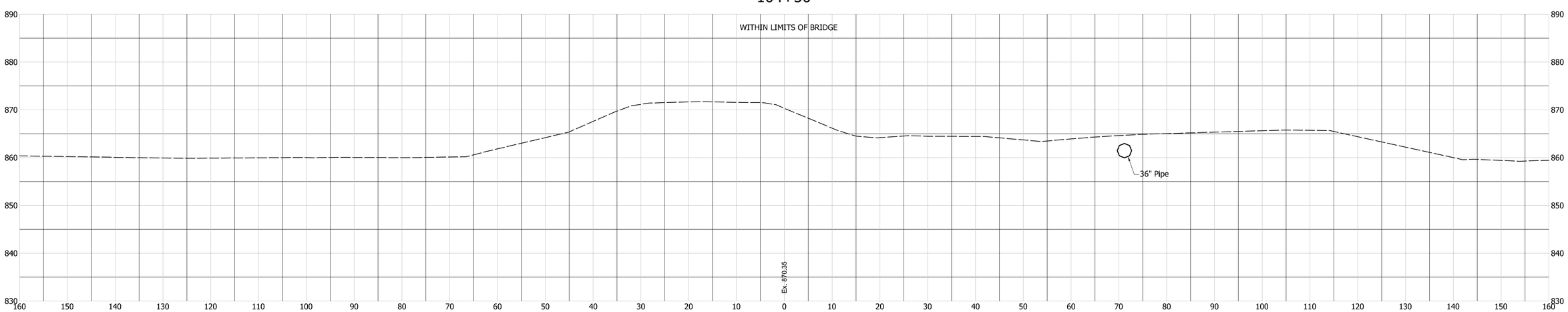

FOR INFORMATION ONLY

NOT FOR CONSTRUCTION

DESIGNED: JGP	DRAWN: JGP
CHECKED: MPB	CHECKED: MPB

INDIANA
DEPARTMENT OF TRANSPORTATION

CROSS SECTIONS
LINE "PR-A"

HORIZONTAL SCALE	BRIDGE FILE
1" = 10'	
VERTICAL SCALE	DESIGNATION
1" = 10'	1401701
SURVEY BOOK	SHEETS
	42 of 43
CONTRACT	PROJECT
R-38073	1401701

S:\2007Proj\2007-162\Plans\Bridge Plans\07-162 Cross Sections-PR6 (INFO ONLY)Amg. Section Sheet - (PB), 4/18/2019 8:11:24 AM

106+00

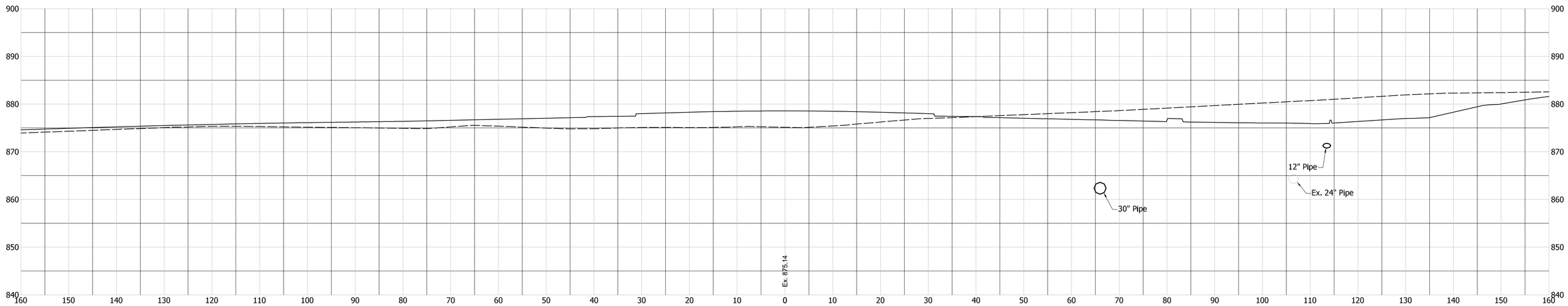

105+50

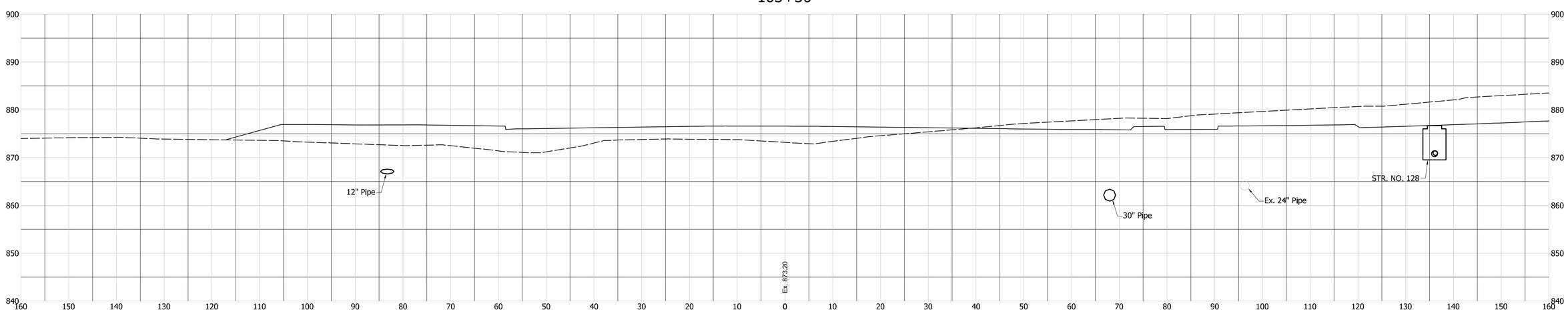

FOR INFORMATION ONLY

NOT FOR CONSTRUCTION

DESIGNED: JGP	DRAWN: JGP
CHECKED: MPB	CHECKED: MPB

INDIANA
DEPARTMENT OF TRANSPORTATION

CROSS SECTIONS
LINE "PR-A"

HORIZONTAL SCALE	BRIDGE FILE
1" = 10'	
VERTICAL SCALE	DESIGNATION
1" = 10'	1401701
SURVEY BOOK	SHEETS
	43 of 43
CONTRACT	PROJECT
R-38073	1401701

S:\2007Proj\2007-1620\Plans\Bridge Plans\07-1620 Cross Sections-PR6.(INFO ONLY)Proj. Section Sheet - (09). 4/18/2019 8:11:48 AM