BEE CAMP CREEK
HYDRAULIC STUDY

HAMILTON COUNTY, INDIANA

Prepared for

Hamilton County Surveyor
One Hamilton County Square
Noblesville, Indiana 46060

December 2004

Prepared by

Christopher B. Burke Engineering, Ltd.
115 W. Washington St., Suite 1368-South
Indianapolis, Indiana 46204

CBBEL Project Number 04-480

EXECUTIVE SUMMARY

This report presents the results of the Christopher B. Burke Engineering, Ltd. (CBBEL) analysis of Bee Camp Creek. The study was conducted on behalf of the Hamilton County Drainage Board following recent complaints of stream bank erosion downstream of Olio Road. Bee Camp Creek is located in Hamilton and Hancock Counties and has an overall drainage area of approximately 1.9 square miles upstream of Olio Road, as shown on **Exhibit 1**. This study was prompted by concerns that increased flow due to development has contributed to erosion problems and that planned upstream development may exacerbate the situation.

This study focused on two main issues. First, County officials were concerned that the current method of stream erosion control might not be appropriate for Bee Camp Creek and they wanted recommendations for improving stream bank stability downstream of Olio Road. Second, County officials wanted a recommended unit discharge rate that could be used for calculating stormwater detention requirements for future development projects in the Bee Camp Creek watershed. This recommendation was to be based on a detailed analysis of the watershed.

The work required to complete this study included field investigations of the hydraulic, hydrologic, and geomorphologic conditions along Bee Camp Creek, reviewing and revising previous hydraulic and hydrologic modeling based on existing and proposed development conditions, analyzing alternatives for improving stream bank stability, and making general recommendations regarding potential solutions. Recommendations regarding each of the two issues described above are as follows:

Issue #1: The current channel maintenance approach of stabilizing specific problem areas along the south bank of the creek using gabions is the most appropriate option for dealing with the erosion problems and should continue. This stream bank stability approach provides flexibility and allows the channel to remain primarily natural and retain the aesthetic and ecological characteristics of its setting. Two stream bank stability problem areas of immediate concern that were noted during this study are shown on **Exhibit 2**. CBBEL recommends stabilizing the southern stream bank at each of these locations. In order to prevent future problems caused by the natural erosion and stream migration in the reach upstream of Olio Road, CBBEL recommends the continued strict enforcement of the County's prohibition against development within the limits of the floodplain. Additionally, the County may consider requiring stabilization of existing stream bank problem areas as a condition of development adjacent to the stream.

Issue #2: The recommended unit discharge rates for the Bee Camp Creek watershed upstream of Olio Road are 0.22 cfs per acre for the 10-year storm event and 0.48 cfs per acre for the 100-year storm event.

TABLE OF CONTENTS

Page

EXECUTIVE SUMMARY ..... **i**

LIST OF EXHIBITS ..... **iii**

LIST OF TABLES ..... **iii**

LIST OF FIGURES ..... **iii**

LIST OF APPENDICES ..... **iii**

1.0 PROJECT OVERVIEW **1**
1.1 INTRODUCTION 1
1.2 FOCUS OF THE STUDY 1

2.0 ANALYSIS OF EROSION SOLUTIONS **2**
2.1 BACKGROUND 2
2.2 ANALYSIS 3
2.2.1 Periodic Stream Bank Stabilization 5
2.2.2 Over-Detention 5
2.2.3 Channel Armoring 6
2.3 RECOMMENDATIONS 8

3.0 DEVELOPMENT OF UNIT DISCHARGE RATES **9**
3.1 BACKGROUND 9
3.2 ANALYSIS 9
3.3 RECOMMENDATIONS 10

4.0 REFERENCES **11**

LIST OF EXHIBITS

1 Site Location Map

2 Erosion Problem Areas

LIST OF TABLES

1 Summary of stream erosion control alternatives

LIST OF FIGURES

1 Unstable stream bank 430 feet downstream of Olio Road

2 Stabilized stream bank 430 feet downstream of Olio Road

3 Section showing conceptual excavation of armored channel

LIST OF APPENDICES

1 Bee Camp Creek HEC-RAS Model Input/Output

2 Indiana Drainage Manual: Eroded Streambank Repair

3 Conceptual Channel Excavation/Armoring Project

4 Unit Discharge Calculations

1.0 PROJECT OVERVIEW

1.1 INTRODUCTION

This report presents the results of the Christopher B. Burke Engineering, Ltd. (CBBEL) analysis of Bee Camp Creek. The study was conducted on behalf of the Hamilton County Drainage Board following recent complaints of stream bank erosion downstream of Olio Road. This study was prompted by concerns that increased flow due to development has contributed to erosion problems and that planned upstream development may exacerbate the situation.

The Bee Camp Creek Watershed is located in the rapidly developing southeastern portion of Fall Creek Township, Hamilton County, Indiana, as shown on **Exhibit 1**. The watershed extends into Hancock County with an overall drainage area of approximately 1.9 square miles upstream of Olio Road. Olio Road crosses Bee Camp Creek approximately 3,600 feet upstream of its mouth and marks the current limit of development in the watershed. The watershed is generally composed of medium-density residential land use downstream of Olio Road and primarily agricultural land use in the upstream reaches.

1.2 FOCUS OF THE STUDY

The main focus of this study was clarified in meetings with staff from the Hamilton County Surveyor's office. Based on discussions with staff, there were two main issues that needed to be addressed. First, County officials were concerned that the current method of stream erosion control might not be appropriate for Bee Camp Creek. Hamilton County has already installed erosion protection at three locations along Bee Camp Creek downstream of Olio Road and they wanted recommendations for improving stream bank stability. Second, County officials wanted a recommended unit discharge rate that could be used for calculating stormwater detention requirements for future development projects in the Bee Camp Creek watershed. This recommendation was to be based on a detailed analysis of the watershed.

The work required to complete this study included field investigations of the hydraulic, hydrologic, and geomorphologic conditions along Bee Camp Creek, reviewing and revising previous hydraulic and hydrologic modeling based on existing and proposed development conditions, analyzing alternatives for improving stream bank stability, and making general recommendations regarding potential solutions. The following sections of the report present the results of our analysis of each of the two issues described above.

2.0 ANALYSIS OF EROSION SOLUTIONS

2.1 BACKGROUND

Hamilton County has received several complaints regarding erosion problems along the reach of Bee Camp Creek between Olio Road and Geist Reservoir over the past 18 months. In response, the County has completed three stream bank stabilization projects along the creek and is in the process of repairing the rock revetment under the Springstone Road bridge, as shown in **Exhibit 2**. The bank stabilization projects were completed in August and October of this year, at a total cost of almost $52,000. Pre- and post-stabilization photographs of the October bank stabilization project are shown in **Figures 1** and **2**, respectively. The estimated cost of the Springstone Road project is $50,000.

The Bee Camp Creek watershed currently faces intense development pressure, which has led County officials to be concerned that the current method of stream erosion control might not be appropriate for Bee Camp Creek. Therefore, they have requested recommendations for improving stream bank stability between Olio Road and Geist Reservoir.

Figure 1 Unstable stream bank 430 feet downstream of Olio Road

Figure 2 Stabilized stream bank 430 feet downstream of Olio Road

2.2 ANALYSIS

Field visits by CBBEL staff were performed to investigate the extent of erosion and to verify the hydraulic, hydrologic and geomorphologic conditions along Bee Camp Creek. Downstream of Olio Road, Bee Camp Creek is primarily a sinuous, low-relief channel in a wide alluvial floodplain bounded by relatively steep bluffs. A stream exhibiting these features typically has a natural, long-term process of lateral erosion along the banks and gradual meandering of the channel between the limits of the floodplain.

The naturally-occurring channel shape, slope, and amount of sinuosity are interdependent with the channel bed material, the amount of stormwater discharge, and the quantity of sediment in the water. A change in any one of these variables (such as the amount of stormwater) may cause rapid alteration of the other channel variables as nature attempts to re-achieve equilibrium. Comparison of detailed topographic mapping from 1994 and 2004 shows that the channel shape, slope, and amount of sinuosity have not changed appreciably over that period. Therefore, the existing stream bank erosion problems appear to be the result of long-term natural phenomena and can be expected to continue into perpetuity. Based on field observations by CBBEL staff, two potential stream bank stability problem areas were identified downstream of Olio Road, as shown on Exhibit 2.

A preliminary HEC-RAS hydraulic model of Bee Camp Creek downstream of Olio Road was developed to calculate existing water surface elevations and stream flow characteristics. The model is based on previously approved Indiana Department of Natural Resources (IDNR) permit models for Springstone Road (FW-15922) and upstream of Olio Road (GN-19376 and GN-4086), and was modified to include cross sections in the study reach. IDNR flow rates were used and a bank full discharge was estimated as part of the erosion analysis. A topographic work map, model output, and a diskette containing an electronic copy of the model are provided in **Appendix 1**. The results of the analysis show that the 100-year base flood elevations are approximately two feet above the stream bank locations and that no residential structures are expected to be inundated by the 100-year base flood. Additionally, the bank full discharge is approximately 120 cfs with average channel velocities between 2.5 and 4 feet per second.

The development of the Bee Camp Creek watershed upstream of Olio Road is expected to promote destabilization of the stream banks through changes to the volume and composition of stormwater runoff. Three stream erosion control approaches were assessed for improving stream bank stability between Olio Road and Geist Reservoir and are summarized in **Table 1**.

Table 1: Summary of stream erosion control alternatives

Alternative	Advantages	Disadvantages
1. Periodic stream bank stabilization projects (Status quo)	• Solves existing stream bank stability problems. • Offers erosion protection in location where installed. • Minimal disturbance of the natural stream.	• Uncertain results; may promote erosion in other locations. • Potential property damage and loss of vegetation as stream migrates. • Potential ecological and/or aesthetic issues. • Annual inspection and maintenance requirements.
2. Require “over-detention” of stormwater runoff for future developments	• Reduces peak discharges and velocities in the stream. • No disturbance of the natural stream.	• Does not solve existing stream bank stability problems. • Uncertain results; may promote downstream erosion. • Potential property damage and loss of vegetation as stream migrates. • Annual inspection and maintenance requirements.
3. Armor entire channel reach	• Provides erosion protection for property and vegetation. • Permanently maintains existing stream alignment for the full reach of the stream.	• Potential ecological and/or aesthetic issues. • Most expensive option in the short-term. • Annual inspection and maintenance requirements.

A "do nothing" approach was not evaluated since it does not solve existing stream bank stability problems. If allowed to continue, stream bank stability problems could result in dangerous slopes creating hazardous conditions for residents and potentially damaging residential structures. Property values could be adversely affected and future erosion repair costs are likely to be more expensive.

2.2.1 Periodic Stream Bank Stabilization

Hamilton County has historically addressed stream bank stability problems downstream of Olio Road on an “as needed” basis. The advantage of this approach is that it allows flexibility in the planning and design of individual stream bank stability projects and allows the channel to remain primarily natural and retain the aesthetic and ecological characteristics of its setting. Unfortunately, this approach can be somewhat haphazard in that it typically only provides stream bank stability at a select location and may move the erosion problem to another location as the stream attempts to achieve equilibrium.

The wide, undeveloped floodplain of Bee Camp Creek provides room for the stream to change shape and migrate over the coming decades without significantly impacting existing residential properties. Stream bank stabilization projects “as-needed” at specific problem areas will protect residential properties that may be threatened. However, these projects may result in additional erosion in other locations. Additionally, channel armoring within the central floodplain area should be avoided because this may transfer the erosion problems to the residential properties along the edges of the floodplain.

Previous stream bank stabilization projects have included gabion basket installations with channel maintenance. These projects appear to be working well. Some other stream bank stabilization options that offer similar protection with potentially improved aquatic and wildlife habitat include A-Jacks, lunkers, and geogrids. Unfortunately, these methods are often much more labor intensive and may require vegetative stabilization. More information on these and other methods of repairing eroded stream banks can be found in **Appendix 2**.

2.2.2 Over-Detention

Hamilton County has the option of requiring future developments in the Bee Camp Creek watershed to limit stormwater discharges beyond current County requirements, an alternative referred to as “over-detention”. Hamilton County currently requires reduction of the post-development 100-year storm event peak discharge to be equal or less than pre-development 10-year storm event peak discharge, and reduction of the post-development 10-year storm event peak discharge to be equal or less than pre-development 2-year storm event peak discharge. To evaluate the effectiveness of “over-detention” CBBEL reviewed

current erosion control, sediment transport, and stream morphology literature sources to assess the role of development in the watershed on stream bank stability.

As discussed above, a natural channel's characteristics (slope, bed material, channel shape) are intrinsically dependent on the characteristics of the water being transported by it (sediment loading, peak discharge, frequency, and duration of flows). Since it is nearly impossible to develop a site without increasing the volume of stormwater runoff, *all development* will affect stream bank stability through changes to the volume and composition of stormwater runoff. How the post-development stormwater hydrograph is managed may affect the natural channel response to development. For instance, development in a watershed with no stormwater detention could greatly increase peak discharges resulting in an increase in the frequency that the channel experiences highly erosive bank full discharges. A secondary effect could be quickening the hydrologic response of the watershed, resulting in an increased incidence of stream banks failing due to rapid drawdown hydrostatic pressures following inundation. Conversely, detention of the stormwater runoff may also negatively impact stream stability by discharging "clear water" from the detention outlets, which causes downstream erosion as the sediment load is reestablished. A secondary effect of detention could be extended low flow discharges as the ponds drain, leading to prolonged inundation of channel bank vegetation and resulting in loss of certain species and a decrease in stream bank stability.

Regardless of how the post-development stormwater hydrograph is managed, the County should expect changes to the existing Bee Camp Creek as the watershed continues to develop. The potential benefit, if any, gained by varying from the County's current stormwater detention criteria would be minimal. Therefore the County should not rely on an "over-detention" solution alone for solving the erosion problems in Bee Camp Creek.

2.2.3 Channel Armoring

Another stream bank stabilization approach for Hamilton County could be to improve the channel with excavation and stone riprap armoring to safely convey a design discharge. Armoring the entire stream is the only method that would provide a low-maintenance channel that will not change shape and migrate through the floodplain. Since channel improvements have the effect of altering the environmental conditions and impacting the habitat for life in the channel, this option may face state and federal Clean Water Act permitting requirements (Sections 401 and 404) and possibly construction site stormwater runoff permitting requirements (327 IAC 15-5) if the impacted area is larger than one acre.

A conceptual channel improvement was developed to illustrate what one such channel design might entail. The HEC-RAS hydraulic model described above was

utilized to size a trapezoidal channel excavation to convey the 10-year storm event discharge. The proposed improvements included excavation between Springstone Road and Olio Road of approximately 2 feet from the channel invert at the existing slope (0.5%) and a 15-foot bottom width trapezoidal excavation. The existing side slopes of Bee Camp Creek would be cut back on a maximum 3:1 side slope and the channel would be stabilized with riprap stone. A sample cross section from the HEC-RAS model showing the assumed channel improvements is included as **Figure 3**.

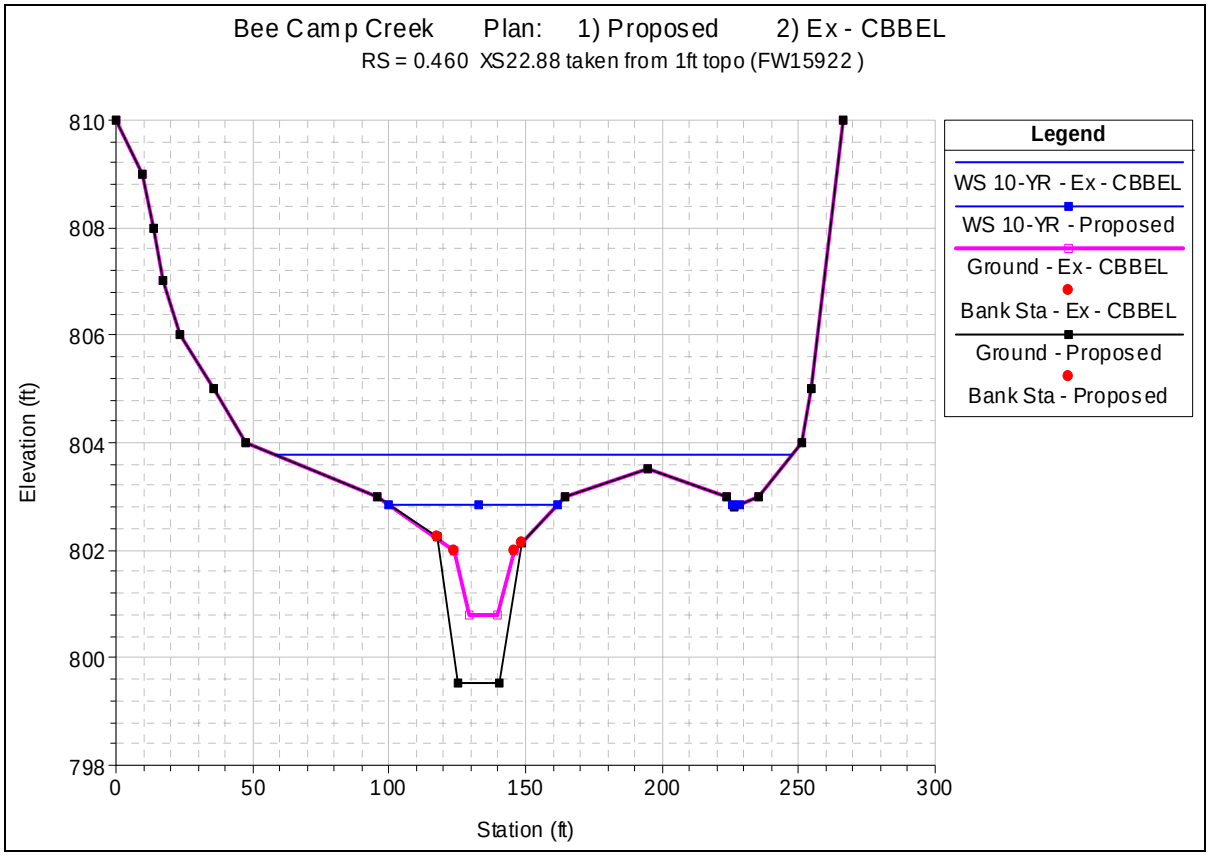

Figure 3 Section showing conceptual excavation of armored channel

Based on costs associated with the stabilization projects that were completed earlier this year, a conceptual estimate of probable cost for this channel improvement project would be about $674,000. More information on this conceptual channel improvement and estimate of probable cost can be found in **Appendix 3.**

2.3 RECOMMENDATIONS

CBBEL finds the current erosion maintenance approach downstream of Olio Road to be appropriate for the foreseeable future and recommends its continuation by addressing stream bank stability problems in select locations along the southern bluff on an "as needed" basis to protect existing residential properties. Channel armoring within the central floodplain area should be avoided because this may transfer the erosion problems to the residential properties along the edges of the floodplain.

Although the stream will likely change shape and migrate through its wide floodplain in the upcoming decades, it is unlikely to impact existing residential structures. To date, there has been no reported residential structure damage associated with the erosion in Bee Camp Creek and no structures appear to be in immediate danger of impact by the eroding stream banks.

Two potential stream bank stability problem areas downstream of Olio Road have been identified on Exhibit 2. CBBEL recommends the stabilization of the southern stream bank at both of these locations. Based on costs associated with the stabilization projects that were completed earlier this year, the estimated cost of stabilizing these areas is about $78,000.

Although the County ordinance currently prohibits development in the floodplain, CBBEL further recommends careful consideration of the impacts of stream bank stability and future channel migration on the planned developments upstream of Olio Road. Future property damage and the need for stream bank stability projects may be avoided by prohibiting residential development in alluvial regions immediately outside of the floodplain or adjacent to the bluffs. Alternatively, the County may consider requiring stabilization of existing stream bank problem areas as a condition of development adjacent to the stream.

3.0 DEVELOPMENT OF UNIT DISCHARGE RATES

3.1 BACKGROUND

Bee Camp Creek stream bank erosion has prompted concerns that increased stormwater runoff due to development has contributed to the erosion problems and that planned upstream development will exacerbate the situation. Hamilton County officials were specifically concerned that the current stormwater detention criteria might not be appropriate for this watershed and requested the development of unit discharge rates that coincide with the recommended erosion maintenance plan specified in Section 2 of this report.

Currently, the Bee Camp Creek watershed does not have an established unit discharge rate for the detention of stormwater runoff and is therefore governed by the general Hamilton County criteria of reducing the post-development 100-year storm event peak discharge to be equal or less than pre-development 10-year storm event peak discharge, and reducing the post-development 10-year storm event peak discharge to be equal or less than pre-development 2-year storm event peak discharge.

As discussed in Section 2, the County should expect a certain amount of changes to the existing Bee Camp Creek as the watershed continues to develop. The potential benefit, if any, gained by varying from the County's current stormwater detention criteria would be minimal. Therefore unit discharge rates were developed for Bee Camp Creek using the County's current stormwater detention criteria.

3.2 ANALYSIS

The unit discharge rates were established based on the County's current stormwater detention criteria, as described above. Unit discharge rates for post-development 10- and 100-year storm events were calculated by dividing the IDNR discharges for the 2- and 10-year storm events by the number of acres in the watershed draining to the Olio Road crossing. Olio Road was chosen as the point of comparison since it is the practical limit of development in the watershed and because the IDNR has previously developed discharge determinations at that location. The IDNR-calculated discharges for the 2-, 10-, and 100-year storm events were 260, 480, and 800 cfs, respectively, with an assumed tributary drainage area of 1.42 square miles.

Stoeppelwerth & Associates recently created a delineation of the Bee Camp Creek watershed tributary to Olio Road as part of their Floodplain Analysis Regulatory Assessment (FARA GN-19376) based on 2-foot contour interval mapping and determined a tributary drainage area of 1.88 square miles. This watershed delineation has already been reviewed and approved by the IDNR. Additionally, CBBEL staff reviewed the delineation and found it to be reasonable. For this

analysis, additional area was added to the "natural" tributary watershed at Olio Road to include the proposed diversion of runoff from the Water Color, Geist Crossing, and a small portion of the Cardinal Point developments. Runoff from these areas will be diverted into Bee Camp Creek to relieve existing drainage problems in the areas west of Olio Road. This adjusted drainage area was used with the previous IDNR discharges to calculate the allowable unit discharge rates.

Stoeppelwerth & Associates also recently created a TR-20 hydrologic model of the Bee Camp Creek watershed. Although this model did not reproduce the IDNR discharges, CBBEL used it to model the proposed release rates to account for timing effects on the peak discharges at Olio Road. The TR-20 model was calibrated to reproduce the IDNR 100-year storm event discharge at Olio Road. Detention basins were then added in each subbasin to simulate the ultimate development condition. The proposed release rates of the detention basins were then optimized to match the County's stormwater detention criteria on a watershed level. Copies of the IDNR discharge determination, unit discharge calculations, hydrologic modeling, and the Stoeppelwerth & Associates watershed delineation map are provided in **Appendix 4**.

3.3 RECOMMENDATIONS

Based on the analysis described in the preceding section, allowable unit discharge rates of 0.22 cfs per acre for the 10-year storm event and 0.48 cfs per acre for the 100-year storm event are recommended for future development in the watershed. Please note that the allowable discharge (release rates) for proposed subdivisions in the watershed should be calculated by multiplying the entire natural drainage area of the watershed within the development (developed or undeveloped) that is tributary to Bee Camp Creek by 0.22 cfs per acre for the 10-year storm event and 0.48 cfs per acre for the 100-year storm event. If additional areas are diverted to drain to the Bee Camp Creek, the release rates should not increase due to the additional diverted area. For example, if 100 acres that naturally drain to Bee Camp Creek under existing conditions are proposed to be developed as part of a 120-acre residential site, the maximum allowable release rates would be 22 cfs for the 10-year storm event and 48 cfs for the 100-year storm event, regardless of whether the entire 120-acre development is designed to drain to Bee Camp Creek or just 100 acres of it. To ensure proper function of a detention pond and to minimize negative impacts associated with loss of floodplain storage, all detention ponds should be located outside the floodplain limits.

4.0 REFERENCES

American Rivers "The Ecology of Dam Removal: A Summary of Benefits and Impacts" Washington D.C., February, 2002

Christopher B. Burke Engineering, Ltd. "Indiana Drainage Handbook", October 13, 1996

Hamilton County Surveyors Office, 2-foot Contour Mapping, August, 3, 2004.

Indiana Department of Natural Resources "Discharge Request Form – Bee Camp Creek " Ser. # 8855, March 24 and 27, 1997.

Paul I. Cripe, Inc. "Construction in Floodway Permit Application – Springs of Cambridge Subdivision – Geist Reservoir at Bee Camp Creek – Hamilton County, Indiana", January 19, 1994.

Simons, Daryl B. and Fuat Senturk "Sediment Transport Technology : Water and Sediment Dynamics" Water Resources Publications, Colorado 1992

Stoeppelwerth & Associates, Inc. "Bee Camp Creek Fishers, Indiana – Floodplain Analysis Regulatory Assessment (FARA)", March 17, 2004.

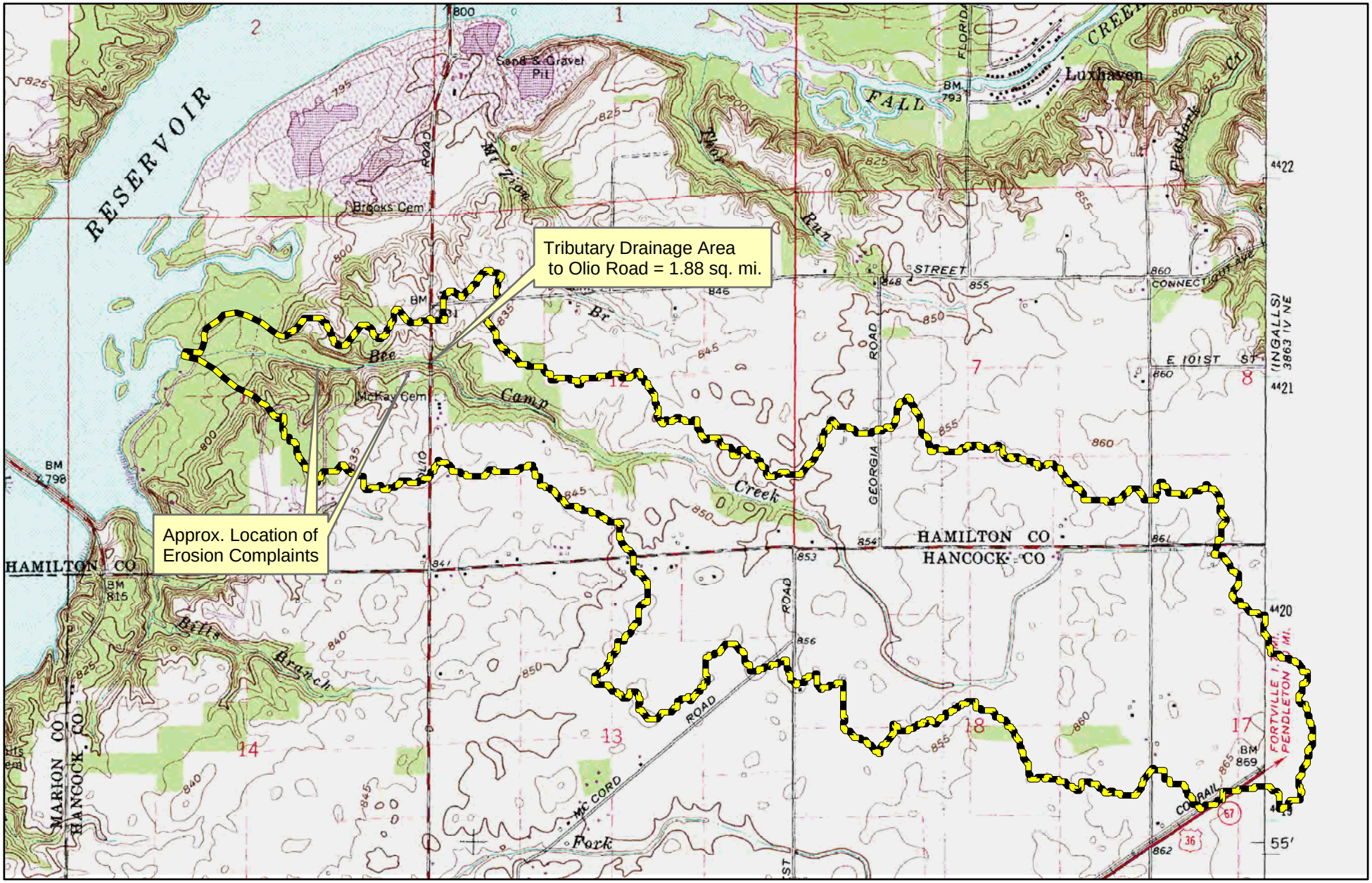

N

Legend

Approximate Drainage Boundary

(not a Regulatory Boundary,
but for illustrative purposes only)

Christopher B. Burke Engineering, Ltd.
National City Center, Suite 1368 South
115 West Washington Street
Indianapolis, Indiana 46204
(t) 317.266.8000 (f) 317.632.3306

PROJECT: Bee Camp Creek Hydraulic Study	PROJECT NO. 04-480	APPROX. SCALE 1"=2000'
TITLE: Site Location Map		DATE: 11/04
Base Map Source: USGS McCordsville, IN Quad Map		EXHIBIT 1

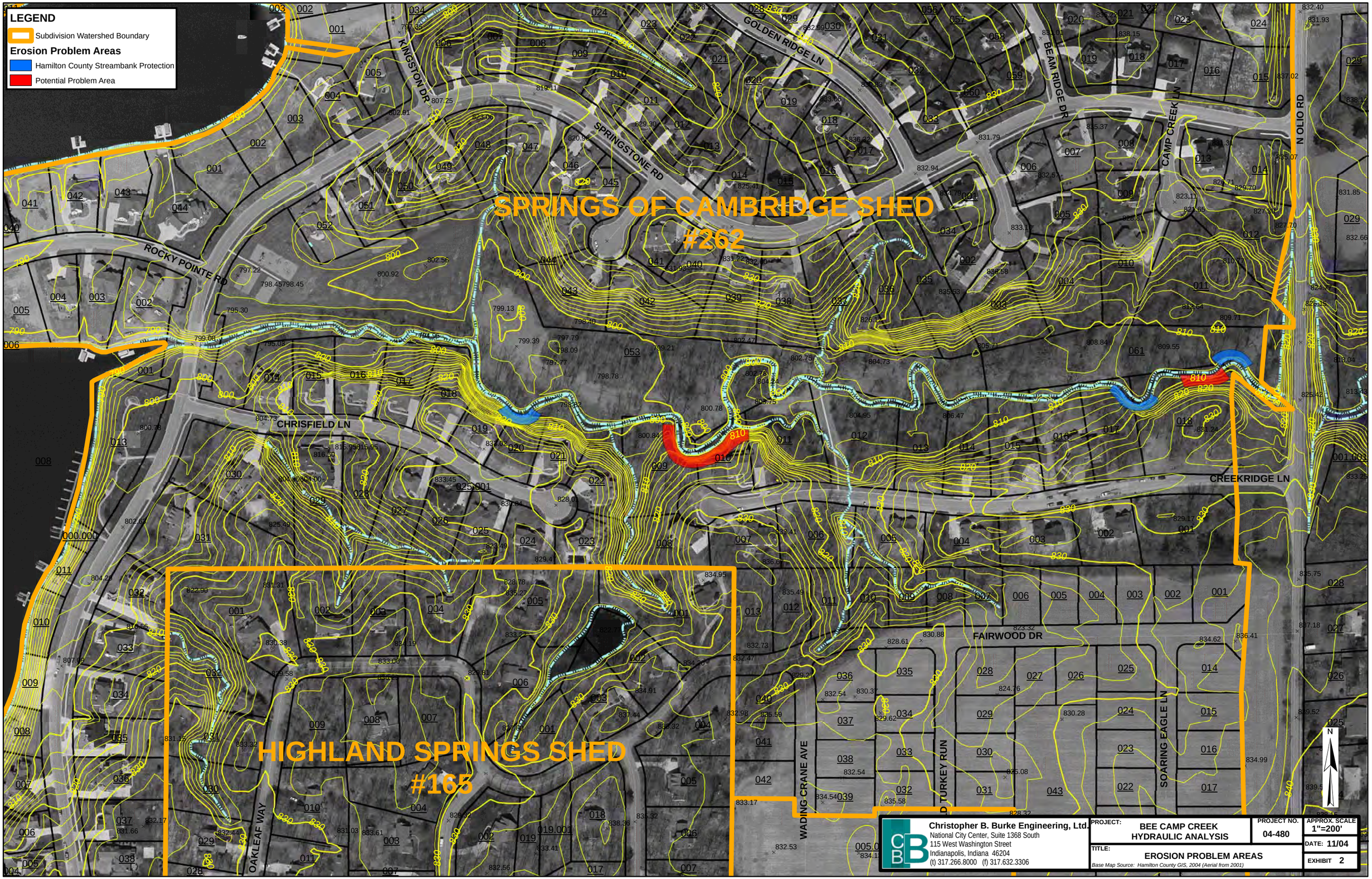

Christopher B. Burke Engineering, Ltd.
National City Center, Suite 1368 South
115 West Washington Street
Indianapolis, Indiana 46204
(t) 317.266.8000 (f) 317.632.3306

PROJECT: BEE CAMP CREEK HYDRAULIC ANALYSIS

PROJECT NO. 04-480

APPROX. SCALE 1"=200'

DATE: 11/04

TITLE: EROSION PROBLEM AREAS

EXHIBIT 2

Base Map Source: Hamilton County GIS, 2004 (Aerial from 2001)

APPENDIX 1

Bee Camp Creek HEC-RAS Model Input/Output

APPENDIX 2

Indiana Drainage Manual: Eroded Streambank Repair

SECTION 5.5

ERODED STREAMBANK REPAIR

	Overview
~~**Practice 501**~~	~~**Live Stakes**~~
~~**Practice 502**~~	~~**Live Fascines**~~
~~**Practice 503**~~	~~**Branch Packings**~~
~~**Practice 504**~~	~~**Tree Revetments**~~
~~**Practice 505**~~	~~**Brush Mattress**~~
Practice 506	**Vegetative Geogrids**
~~**Practice 507**~~	~~**Live Cribwalls**~~
Practice 508	**Lunkers**
Practice 509	**A-Jacks**
Practice 510	**Stone Riprap**
Practice 511	**Concrete Retaining Wall**
Practice 512	**Gabion Retaining Wall**
Practice 513	**Timber Retaining Wall**
Practice 514	**Sheetpile Retaining Wall**
Practice 515	**Composite Retaining Wall**

Not accepted in Hamilton County

Without live stakes

Preferred practice

SECTION 5.5
ERODED STREAMBANK REPAIR

Stream channel erosion can generally be corrected using either vegetative (Practices 501-506) or structural (Practices 510-515) techniques, or a combination of both (practices 507-509 and other possible combinations). Vegetation techniques are generally less expensive than structural, and are generally more compatible with stream characteristics. Structural techniques, though expensive and considered unsightly by some, may offer more permanent protection against erosion. Regardless of which technique the Handbook user decides to utilize, it is important to keep in mind that no one measure works well in all situations.

The following methods are described in terms of cost, applicability, ease of installation, and the advantage of using one technique over another. This list is not comprehensive, nor is it attempted to anticipate all circumstances in which one method might be used over another. Thus, the users must decide for themselves which method best fits the character of their particular location and problem.

Vegetative methods tend to work well along natural streams, in urban areas where a natural appearance, improved habitat, and water quality is important, and where cost may be a deciding factor as to whether a stream is restored. Visually, streams repaired using vegetative methods may take on a natural appearance after only one growing season. The network of plants critical to all vegetative techniques absorbs erosional energy during floods, provides habitat for wildlife, acts as a barrier to ice scour, conserves soil moisture, and stabilizes the soils and streambank.

Choosing a vegetative technique depends largely upon the type of problem encountered. Moderately eroded stream banks may be repaired with minimum regrading, and the installation of live stakes, a seed mix, and mulch. Live fascines, branch packings, and brush mattresses might be employed in areas with more serious erosion problems, but where there is still at least a 2:1 (1V:2H) grade to work with. However, note that the toe of slope may still require structural stabilization. Live cribwalls, lunkers, A-jacks, and vegetative geogrids work well in severely eroded areas with steep banks.

Structural techniques may be considered in highly developed areas with little to no natural overbank or where streambank pedestrian traffic is heavy. Retaining walls are generally preferred for steep to sheer, unprotected streambanks. Sheet piling may be preferred in areas where aesthetics are not important, and where space limitations prohibits the construction of a timber or concrete wall. All structural techniques should be installed in accordance with the manufacturer's specifications. Improper installation of these techniques can exacerbate erosion problems by transferring and amplifying stream velocity downstream.

Many of these techniques can and should be combined either for enhanced structural stability, improved environmental quality, or for a more aesthetically pleasing appearance. Top soil and live stakes can be placed between gabion baskets to create a more natural appearance. Riprap is sometimes advised along the eroded toe of a slope after which vegetative techniques can be used for the remainder of the slope.

Large-scale stabilization projects should be planned and designed by an experienced engineer or stream restorationist. Detailed stream studies are advised prior to tackling long, stream channel reaches. The U.S. Army Corps of Engineers' Waterways Experiment Station - Streambank Protection Guidelines for Landowners and Local Governments is one recommended reference for the engineering of major stabilization projects.

Last Print/Revision Date: October 13, 1996

PRACTICE 506
VEGETATIVE GEOGRID

DESCRIPTION

- Soil lifts wrapped with natural or synthetic geotextile materials between which are placed layers of live branches.

Exhibit 506a: Vegetative Geogrid (Source: Biotechnical Erosion Control Limited)

PURPOSE

- Rebuilds banks by capturing sediment; reinforces bank.

WHERE APPLICABLE

- Streams with moderate to steep slopes.
- High velocity areas.

ADVANTAGES

- Immediately reinforces bank at a steeper angle.
- Captures sediment and contributes to rebuilding the bank.
- Provides medium for revegetation.

CONSTRAINTS

- Labor intensive.

DESIGN AND CONSTRUCTION GUIDELINES

Materials

- Brush of varying species and lengths (See Practice 501 Live Stakes).
- Suitable soil or soil/gravel fill.
- Vegetative stabilization (See Practice 1102).
- Natural (burlap) or synthetic geotextile fabric.
- 1" x 2" oak stakes, 1' - 2' long.

Installation

- Live cut brush is placed on the ground, perpendicular to the stream.
- Brush is covered with the geotextile.
- Fill material is placed over the geotextile and compacted.

- Geotextile is tightly wrapped around the soil layer and secured with the stakes.
- Live brush is placed between each soil lift.
- Continue the above process until the desired height is achieved. The final level should be finished with branch packings.

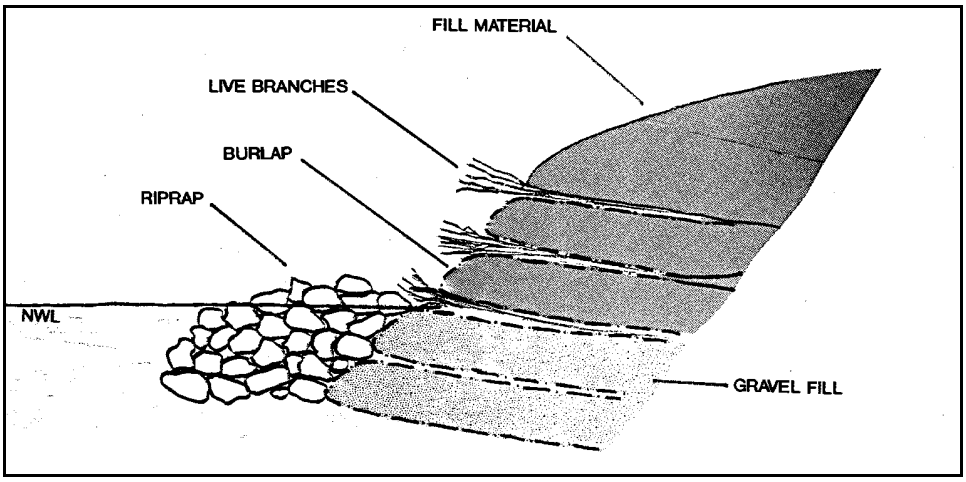

Exhibit 506b: Construction of a vegetative geogrid (Source: CBBEL Files)

Special Considerations

- Gravel fill may be used in the bottom tiers; rock may be placed at the toe of the slope for added protection.

MAINTENANCE

- Monitor and repair as necessary.
- Beware of gullies forming beneath the mattress before roots become established.

REFERENCES

Related Practices

- Practice 502 Live Fascines.
- Practice 507 Live Cribwalls.
- Practice 508 Lunkers.
- Practice 509 A-Jacks.

Other Sources of Information

- DuPage County Stream Stabilization Program.
- Soil Bioengineering Strategies.

Last Print/Revision Date: October 13, 1996

PRACTICE 508
LUNKERS

DESCRIPTION

- Oak or plastic (Eco-wood) rectangular boxes built into toe of bank to eliminate scour and provide fish habitat.

Exhibit 508a: Lunkers (Source: CBBEL Files)

PURPOSE

- Protect toe of bank and provide aquatic habitat.

WHERE APPLICABLE

- Undercutting at toe of bank.
- Approximately 3:1 (1V:3H) slope.
- Straight or curved sections.

ADVANTAGES

- Immediate erosion protection at toe of slope.
- Provides habitat.

CONSTRAINTS

- Labor intensive.
- Requires equipment for excavating and backfilling.

DESIGN AND CONSTRUCTION GUIDELINES

Materials

- Eco-wood or oak lunker.
- 5/8" rebar in 5' lengths (9 per lunker)
- Geotechnical fabric.
- Live Stakes (Practice 501).
- Vegetative Stabilization (Practice 1102).

Installation

- Follow procedures for vegetative stabilization.
- Excavate trench in channel at toe of bank so extending end of stringer lies flat across undistributed soil.
- Lay lunkers in trench end to end.
- Drive 9 rebars through each lunker, into streambed.
- Place riprap on top of lunkers, and backfill with excavated material.
- Slope stream bank back at 3:1 (1V:3H) slope and tamp.
- Revegetate disturbed area according to vegetative stabilization method.

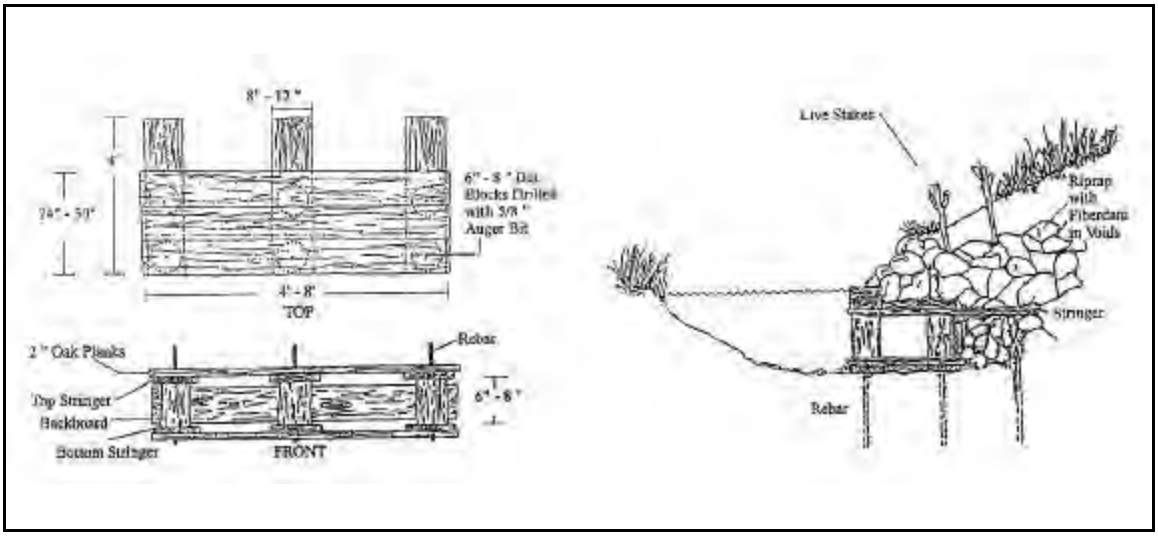

Exhibit 508b: Construction of a lunker structure (Source: DuPage County Streambank Stabilization Program)

Special Considerations

- Only use oak lunkers where baseflow is high enough to completely submerge lunker.

MAINTENANCE

- Low. Monitor and repair as necessary, especially at ends of structure.

REFERENCES

Related Practices

- Practice 501 Live Stakes.
- Practice 502 Live Fascines.
- Practice 503 Branch Packings.
- Practice 506 Vegetative Geogrid.
- Practice 510 Stone Riprap.
- Practice 512 Gabion Retaining Wall.

Other Sources of Information

- DuPage County Streambank Stabilization Program.

Last Print/Revision Date: October 13, 1996

PRACTICE 509
A-JACKS

DESCRIPTION

- Concrete, jack-like structures set at toe of bank. Often integrated with live stakes and other vegetative stabilization techniques.

Exhibit 509a: A-Jacks Installation (Source: Illinois State Water Survey Publication)

PURPOSE

- To protect streambanks from the erosive forces of flowing water and to stabilize the soils along the channel bank.

WHERE APPLICABLE

- Along eroded toe.
- Low to high velocity areas.
- Scour holes.

ADVANTAGES

- Protects soil from scour during plant propagation.
- Provides erosion control protection even if vegetation does not become established.
- Immediate erosion protection at toe of slope.
- Improves aquatic and wildlife habitat.

CONSTRAINTS

- Labor intensive.
- Must be used in conjunction with vegetative stabilization.

DESIGN AND CONSTRUCTION GUIDELINES

Materials

- 2' A-Jacks.
- Live Stakes (Practice 501).
- Fiberdam - geotechnical material.
- Vegetative Stabilization (Practice 1102).
- Suitable backfill.

Installation

- Follow preparation procedures for vegetative stabilization.
- Excavate 1' deep trench in channel at toe of bank.
- Lay an interlocking row of A-Jacks in trench.
- Place live stakes according to live stakes method, and fiberdam in voids between A-Jacks.
- Backfill until A-Jacks are completely buried.
- Slope streambank back at 3:1 (1V:3H) slope, if possible, and tamp.
- Revegetate disturbed area according to vegetative stabilization methods.

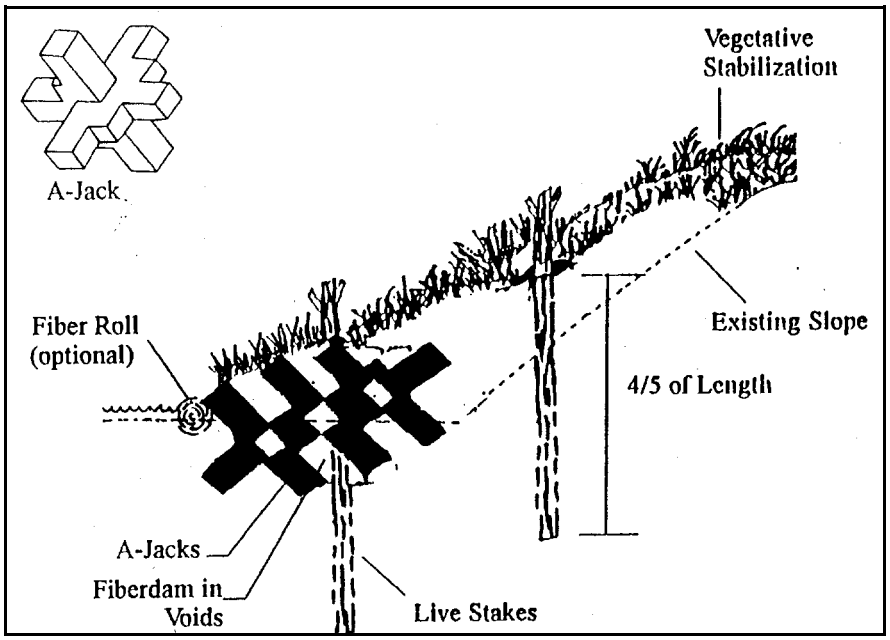

Exhibit 509b: Installation of A-jacks in conjunction with live stakes and vegetative stabilization (Source: DuPage County Streambank Stabilization Program)

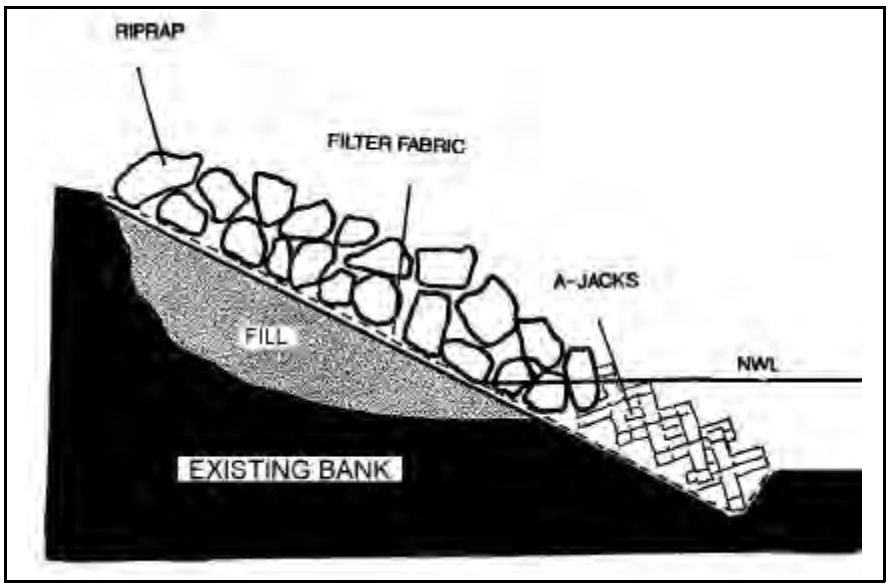

Exhibit 509c: A-jacks used in conjunction with riprap (Source: CBBEL Files)

Special Considerations

- A-Jacks should be stacked above the 5-year high flow elevation and trenched in 2' deep.
- Combine fiber roll with A-Jacks when wave action is evident or immediate natural appearance is desired.
- May be combined with riprap.

REFERENCES

Related Practices

- Practice 501 Live Stakes.
- Practice 502 Live Fascines.
- Practice 503 Branch Packing.
- Practice 506 Vegetative Geogrids.
- Practice 507 Live Cribwalls.
- Practice 508 Lunkers.

Other Sources of Information

- DuPage County Streambank Stabilization Program.
- Illinois State Water Survey Publication.

Last Print/Revision Date: October 13, 1996

PRACTICE 510
STONE RIPRAP

DESCRIPTION

- Covering of a portion of a channel bank with a layer of stone that approximates the natural slope of the channel bank. (Note: This practice is also included in the Indiana Erosion Control Handbook.)

Exhibit 510a: Stone Riprap (Source: North Carolina Erosion Control Manual)

PURPOSE	●	To protect streambanks from the erosive forces of flowing water.
WHERE APPLICABLE	●	On small to medium sized channels and on all character types.
	●	Generally applicable where flow velocities exceed 6 ft/sec or where vegetative streambank protection is inappropriate.
	●	Shaded areas.
	●	Streams where water levels fluctuate.
	●	Actively eroding banks usually along channel curves or wherever it is desirable to reduce the energy of the water.
ADVANTAGES	●	Relatively inexpensive, especially compared to other structural methods such as walls.
	●	Flexible and resistant to scour.
	●	Allows for water percolation.
CONSTRAINTS	●	Available stone must be able to resist the force of high velocity water flows.
	●	Not recommended on steep slopes or areas where slope cannot be regraded to 2:1 (1V:2H) or flatter.
	●	Hand-placed riprap is labor intensive.
	●	Flooding may wash riprap into stream.

DESIGN AND CONSTRUCTION GUIDELINES

Materials

- Hard, angular and weather-resistant stone having specific gravity of at least 2.5.
- Where available, use local stone. Local stone can often be obtained at lower cost and it also blends better into the existing streambank environment.
- 50% of stone (by weight) must be larger than specified d_{50} and no more than 15% of the pieces (by weight) should be less than 3 inches.
- Geotextile fabric or sand/gravel layer should be used for stabilization under all permanent riprap installations.

Installation

- Remove brush, trees, stumps and other debris.
- Excavate only deep enough for filter and riprap.
- Compact any fill material to density of surrounding natural soil.

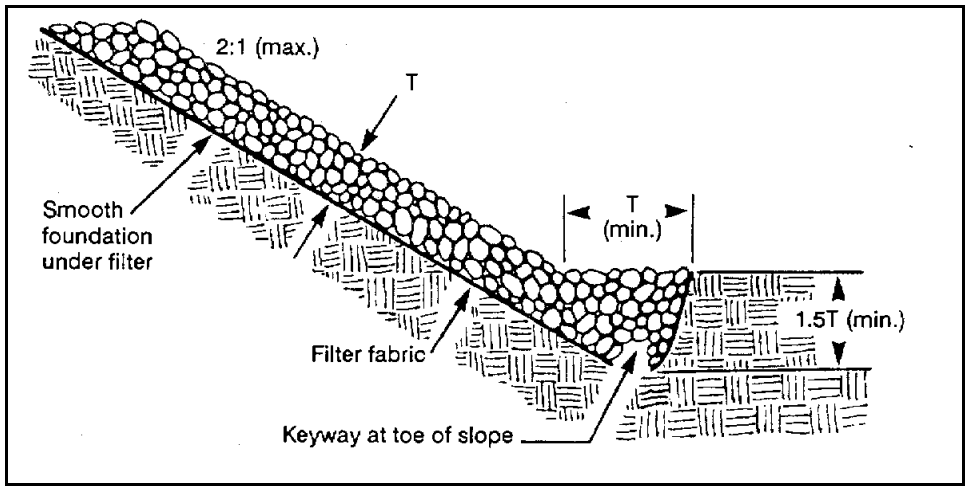

Exhibit 510b: Construction of a riprap bank with toe protection (Source: Indiana Erosion Control Handbook)

- Cut keyway at base of slope to reinforce the toe; keyway depth should be 1½ times the design thickness of the riprap and extend a horizontal distance equal to the design thickness.
- Place geotextile fabric. If using sand/gravel filter, spread the well-graded aggregate in a uniform layer at least 6 inches thick; if 2 or more layers are required, place the layer of smaller gradation first and avoid mixing the layers.
- Add riprap to full thickness in 1 operation.
- Place smaller rock in voids to form a dense, uniform, well-graded mass. Some hand placement of material will most likely be necessary.
- Blend the riprap surface smoothly with the surrounding area to eliminate protrusions or overfalls.
- Riprap may be either hand-placed or dumped.

Special Considerations

- Use the peak 10-year storm discharge for computing the minimum expected (design) velocity.
- Foundation toe must be properly reinforced to prevent undercutting or slumping.
- Slopes steeper than 2:1 (1V:2H) should be flattened so stone material will not become displaced.
- Riprap must be properly graded to prevent stone movement and erosion of the foundation.
- Compact the slopes before placing riprap or stone settlement and displacement may occur.
- Extend riprap sections the entire length between well-stabilized points of the stream channel.
- Riprap used must be of large enough size and extend at least 12 inches below normal water level to provide habitat for aquatic organisms in the voids
- May secure toe using A-Jacks (See Practice 509)

MAINTENANCE

- Inspect periodically for displaced stone material, slumping and erosion at edges (especially downstream or downslope). Properly designed and installed riprap usually requires very little maintenance if promptly repaired.

REFERENCES

Related Practices

- Practice 501 Live Stakes.
- Practice 507 Live Cribwalls.
- Practice 508 Lunkers.
- Practice 512 Gabion Retaining Wall.
- Other Combined Practices.

Other Sources of Information

- Indiana Erosion Control Handbook.
- North Carolina Erosion Control Manual.
- Pennsylvania Streambank Stabilization Guide.
- COE Streambank Guidelines.

Last Print/Revision Date: October 13, 1996

PRACTICE 511
CONCRETE RETAINING WALL

DESCRIPTION

- A permanent concrete wall which retains a stream bank.

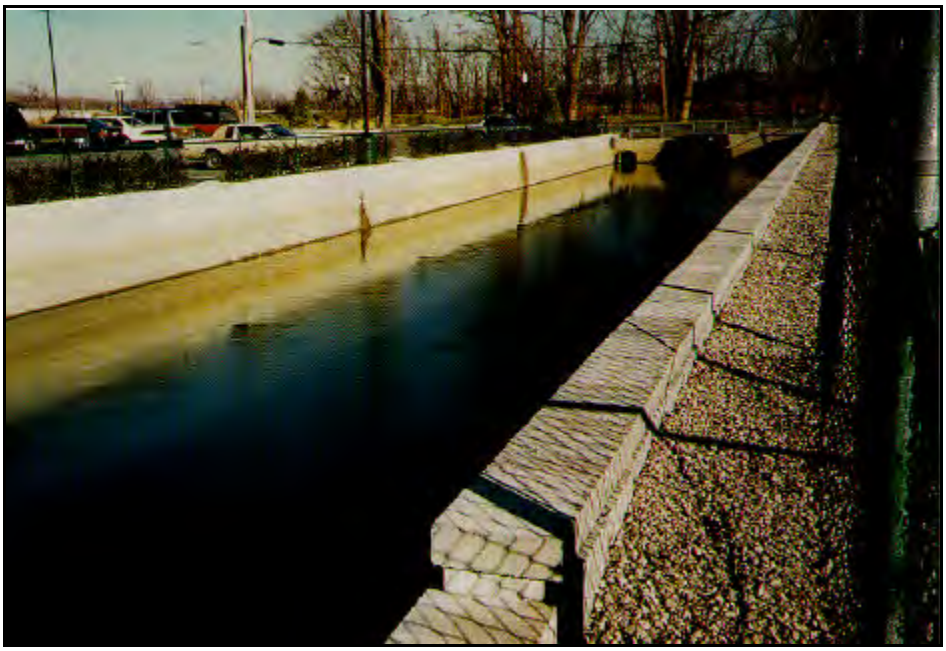

Exhibit 511a: Concrete Retaining Wall (Source: Land and Water Magazine)

PURPOSE

- Create permanent wall that retains soils, usually along highly eroded and steep to sheer stream channels.

WHERE APPLICABLE

- Stream channels of all types and sizes.
- Stream channels with widely fluctuating water levels, and with high velocities.

ADVANTAGES

- Low maintenance.
- Provides permanent stability.
- Prevents erosion and scouring.

CONSTRAINTS

- Expensive compared to other types of walls.
- Requires heavy equipment.
- Lacks ecological value.
- May exacerbate downstream erosion problems if not installed properly.
- Limited to areas with sufficient room for installation.
- May be objectionable aesthetically.
- Must be designed by an engineer to fit conditions to the site.

DESIGN AND CONSTRUCTION GUIDELINES

Materials

- Concrete.
- Support structures.
- Reinforcing steel (some types).
- Forms and formwork.

Installation

- Assemble general information: topographical and physical surveys, controlling dimensions.
- Analyze subsoil conditions.
- Select type and tentative wall proportions.
- Compute each pressure and surcharge pressure.
- Analyze structural stability.
- Analyze foundation stability.
- Design structural elements.
- Select drainage in backfill.
- Predict settlement and movement of walls.

Special Considerations

- There are five principle types of concrete retaining walls:

- Gravity Walls: No tensile stress. Heavy construction provides plenty of relative strength, but may not be economical for high walls.

Exhibit 511b: Gravity Retaining Wall (Source: Teng Foundation Design)

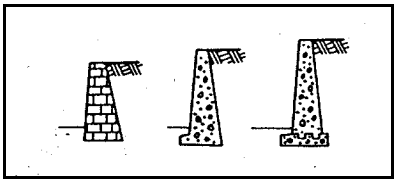

- Semi-Gravity Walls: Some reinforcing steel necessary to reduce the mass of concrete.

Exhibit 511c: Semi-Gravity Retaining Wall (Source: Teng Foundation Design)

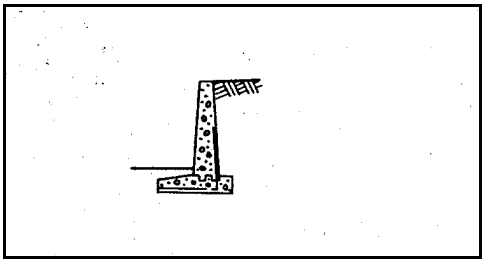

- Cantilever Walls: Inverted T forms base and acts as cantilever. Usually made of reinforced concrete, but concrete blocks may be used. Economical for walls $\leq$ 25'.

Exhibit 511d: Cantilever Retaining Wall (Source: Teng Foundation Design)

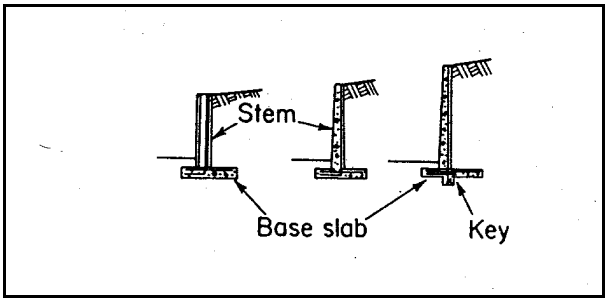

- Counterfort Walls: Like cantilever walls but with vertical brackets called counterforts on the bank side of the wall.

Exhibit 511e: Counterfort Retaining Wall (Source: Teng Foundation Design)

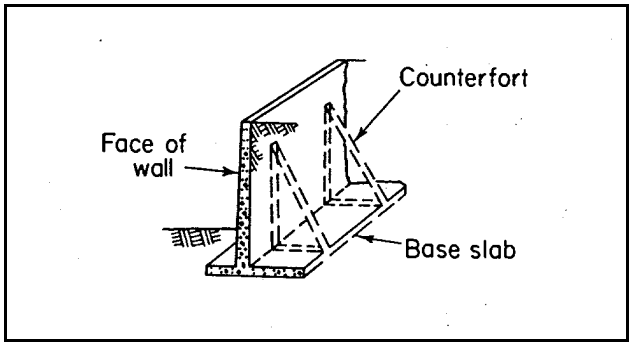

- Butressed Walls: Like counterfort walls but brackets (butresses) are on stream side of wall.

Exhibit 511f: Butressed Retaining Wall (Source: Teng Foundation Design)

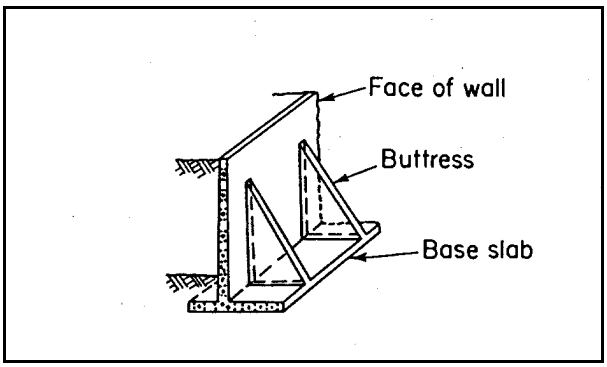

MAINTENANCE

- Low.
- Wall settlement can jeopardize the overall integrity of the wall. The potential for settlement can be reduced by overbuilding the wall in excess of the settlement prediction.

REFERENCES

Related Practices

- Practice 507 Live Cribwalls.
- Practice 510 Stone Riprap.
- Practice 511 Concrete Retaining Walls.
- Practice 512 Gabion Retaining Wall.
- Practice 513 Timber Retaining Walls.
- Practice 514 Sheetpile Retaining Walls

Other Sources of Information

- Teng Foundation Design.
- Bulkheads and Seawalls.

Last Print/Revision Date: October 13, 1996

PRACTICE 512
GABION RETAINING WALL

DESCRIPTION

- Rock-filled baskets of wire or plastic. Baskets are wired together to form a wall or mattress for erosion control along a bank or channel.

Exhibit 512a: Gabion Retaining Wall (Source: North Carolina Erosion Control Manual)

PURPOSE

- Protect steep banks where scouring or undercutting are problems.

WHERE APPLICABLE

- Lining confined channels.
- Medium to large size streams and on all character types.

ADVANTAGES

- Relatively economical when rock fill is available.
- Flexible, especially when combined with live plant material.
- Very effective in immediately securing unstable streambanks.

CONSTRAINTS

- Labor intensive.
- Skill is required to install correctly.
- Expensive to correct if not installed correctly.
- Lacks ecological value
- May exacerbate downstream erosion problems if not installed properly.
- Requires more space than retaining walls.

DESIGN AND CONSTRUCTION GUIDELINES

Materials

- Gabion baskets.
- 4" - 8" rocks for gabions, and 2.5" - 4" for mattresses.
- Filter fabric in highly erodible areas.

Installation

- Gabions and gabion mattresses must be keyed into the streambed to prevent undermining and slumping.

- Empty baskets are wired together and anchored to the streambed.
- Baskets are filled by hand or machine in one foot layers. Two connecting wires are installed with each layer until the gabions are filled.
- Adjoining gabions are wired together by their vertical edges; empty gabions, stacked on filled gabions, are wired to the filled gabions at front and back.
- Baskets are closed and securely laced once filled.
- Gabions may be built as mass gravity structures with wide bases and narrow tops.

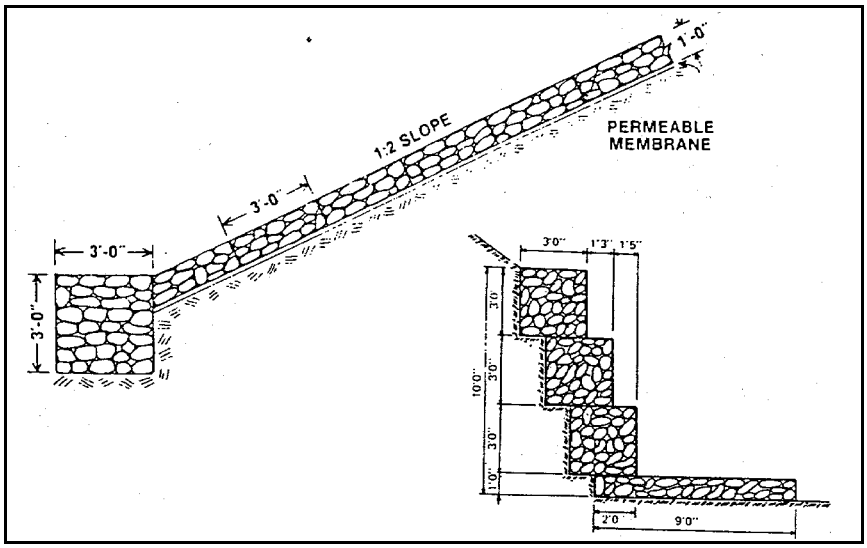

Exhibit 512b: Construction of a gabion retaining wall and mattress (Source: North Carolina Erosion Control Manual)

Special Considerations

- Live Stakes (Practice 501) may be placed between baskets and secured into the soil when used on slopes.

MAINTENANCE

- Low. Monitor and repair as necessary.

REFERENCES

Related Practices

- Practice 501 Live Stakes.
- Practice 511 Concrete Retaining Walls.
- Practice 513 Timber Retaining Walls.
- Practice 514 Sheetpile Retaining Walls.

Other Sources of Information

- Pennsylvania Streambank Stabilization Guide.
- Maccaferri Gabions, Inc. Technical Handbooks.

Last Print/Revision Date: October 13, 1996

PRACTICE 513
TIMBER RETAINING WALL

DESCRIPTION

- A permanent timber wall which retains a streambank.

Exhibit 513a: Timber Retaining Wall (Source: NRCS Engineering Field Handbook)

PURPOSE

- Create permanent wall that retains soils, usually along highly eroded and steep to sheer stream channels.

WHERE APPLICABLE

- Stream channels of all types and sizes.
- Stream channels with widely fluctuating water levels, and with high velocities.
- Wall heights up to 4' differential.

ADVANTAGES

- May use less skilled labor and lighter material than other walls.
- Can be adapted to a range of stream bank configurations.
- Low maintenance.
- Prevents erosion and scouring.

CONSTRAINTS

- Expensive.
- Limited to areas with sufficient room for installation.
- May be objectionable aesthetically.
- Lacks ecological value and may be discouraged by agencies due to concerns about potential negative impacts of treated lumber or plastic especially where constant or considerable contact exists with water.
- May exacerbate downstream erosion problems if not installed properly.
- Must be tied back at heights above 3' which may require excavation.
- Less permanent than stone or concrete walls.

DESIGN AND CONSTRUCTION GUIDELINES

Materials

- Wood timbers treated with a preservative.
- Steel bins.
- Open graded granular backfill.

Design

- Assemble general information: topographical and physical surveys, controlling dimensions.
- Analyze subsoil conditions (visual; requires geotechnical report if over 3' high).
- Select type and tentative wall proportions.
- Compute earth pressure and surcharge pressure (over 3' high).
- Analyze structural stability (over 3' high).
- Analyze foundation stability (over 3' high).
- Design structural elements (over 3' high).
- Select drainage in backfill.

Installation

- Establish firm foundation soil. Put in at least 6". Open graded gravel as bedding.
- Lay successive courses of timbers with offset joints.
- Every fourth course, turn a timber at least as long as the height of the wall perpendicular and embedded in the soil behind the wall with a steel pin.
- Backfill with open graded aggregate and compact with each horizontal course.

Special Considerations

- The space behind the wall must be free draining so that the water pressure differentials caused by stream fluctuations are minimized.
- Wall heights over 3' should be reviewed by a structural engineer prior to installation.

MAINTENANCE

- Check for rotting timbers and replace as necessary.
- Wall settlement can jeopardize the overall integrity of the wall. The potential for settlement can be reduced by overbuilding the wall in excess of the settlement prediction.
- Watch for erosion at the wall base as undermining is often the cause of wall failure.

REFERENCES

Related Practices

- Practice 507 Live Cribwalls.
- Practice 510 Stone Riprap.
- Practice 511 Concrete retaining Walls.
- Practice 512 Gabion Retaining Wall.
- Practice 513 Timber Retaining Walls.
- Practice 514 Sheetpile Retaining Walls.

Other Sources of Information

- Teng Foundation Design.
- Bulkheads and Seawalls.

Last Print/Revision Date: October 13, 1996

PRACTICE 514
SHEETPILE RETAINING WALL

DESCRIPTION

- Steel, concrete, wood, or plastic sheet piles that interlock to form a continuous wall along a stream channel. The wall may be partially supported by anchors imbedded in the soil behind the wall, called tie-backs.

Exhibit 514a: Sheetpile Retaining Wall (Source: NRCS Files)

PURPOSE

- Create a temporary or permanent wall that retains soils, usually along highly eroded and steep to sheer stream channels.
- Where land ownership or rights prohibit flattening a slope or other types of armor.

WHERE APPLICABLE

- Stream channels of all types and sizes.
- Stream channels with widely fluctuating water levels, and with high velocities.
- Where permanent channel obstructions such as bridge abutments cause significant erosion.

ADVANTAGES

- Low maintenance.
- Provide permanent stability if necessary.
- Prevents erosion and scouring in immediate area of sheet piling.
- May be used along channels where space prohibits the construction of other structures that require more space to work.

CONSTRAINTS

- Expensive.
- Requires heavy equipment.
- Should not be used in areas where boulders or bedrock would

prevent driving piles to the appropriate depth.

- Should not be used to create very high walls in which the flexural strength of the wall might be compromised.
- May be objectionable aesthetically.
- Lacks ecological value and may be discouraged by agencies due to concerns about potential negative impacts of treated lumber or plastic especially where constant or considerable contact exists with water.
- May exacerbate downstream erosion problems if not installed properly.
- Must be reviewed by a structural engineer for stability.
- May transfer erosion downstream from sheeting if not properly transitioned.

DESIGN AND CONSTRUCTION GUIDELINES

Materials

- Rolled steel, precast concrete, wood or plastic piles.
- May require anchoring structures such as cantilevers or tie rods.

- Steel: Interlocking, rolled steel sheet piles of varying weights driven into the ground. Steel is the most widely used pile material.

- Wood: Independent or tongue-and-groove interlocking planks driven edge to edge into the ground. May be permanent if permanently inundated, though generally used as a temporary structure for short to moderately high walls.

- Concrete: Precast, concrete piles driven side by side into the ground. Long service life but high initial costs. Concrete piles are more difficult to handle and drive than steel piles. May be useful in streams with high abrasion, and where the wall must support an axial load. Can induce settlement in soft foundations.

- Plastic: High density, interlocking plastic sheets. Usually vibrated into the ground. Plastic has lower structural capacities than other materials and is generally used in tie-back situations.

Installation

- The most common methods for installing sheetpiling include driving, jetting and trenching. The type of sheetpiling used usually governs the method of installation.
- Driving: Sheetpiling is typically driven with traditional pile driving equipment.
- Jetting: Water jets are sometimes necessary when driving piles into dense, cohesionless soils. Jetting should be performed on both sides of piling simultaneously but must be discontinued during the last 5'-10' of penetration.
- Trenching: Usually necessary when pile penetration is shallow and driving is impossible.
- Sheetpile retaining walls should be designed by a qualified engineer and installed in accordance with the manufacturer's specifications.

Special Considerations

- Anchored walls are required when the height of the wall exceeds heights recommended for cantilever walls, or when lateral deflections are a consideration. Proximity of an anchored wall to an existing structure is governed by the horizontal distance required for the installation of an anchor.

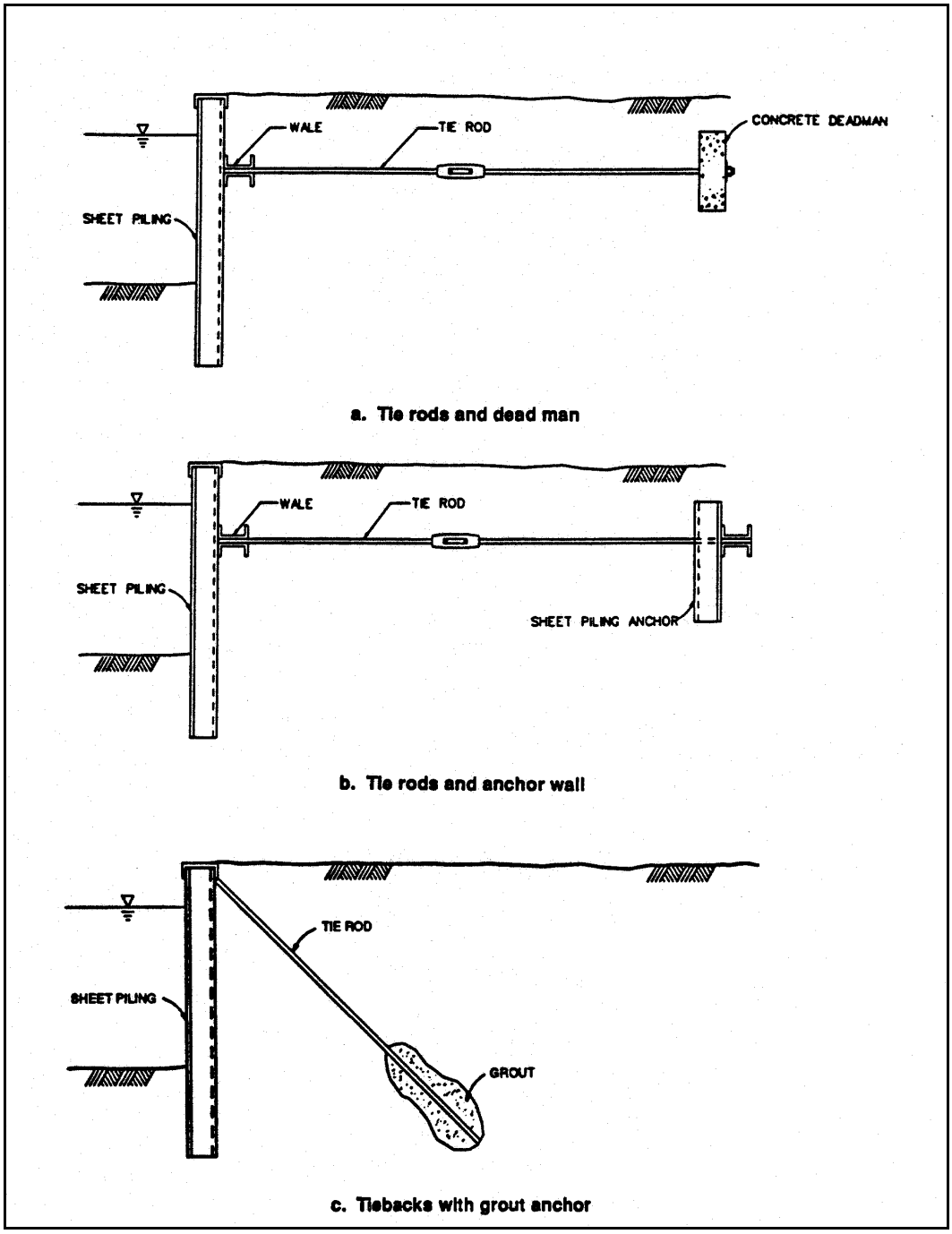

Exhibit 514b: Anchored walls (Source: COE Engineering Manual)

- Cantilever walls are usually used as floodwalls or earth retaining walls < 10' - 15' high. Cantilever walls derive their support solely from foundation soils so they may be installed relatively close (≥ 1.5

times the length of the piling) to an existing structure.

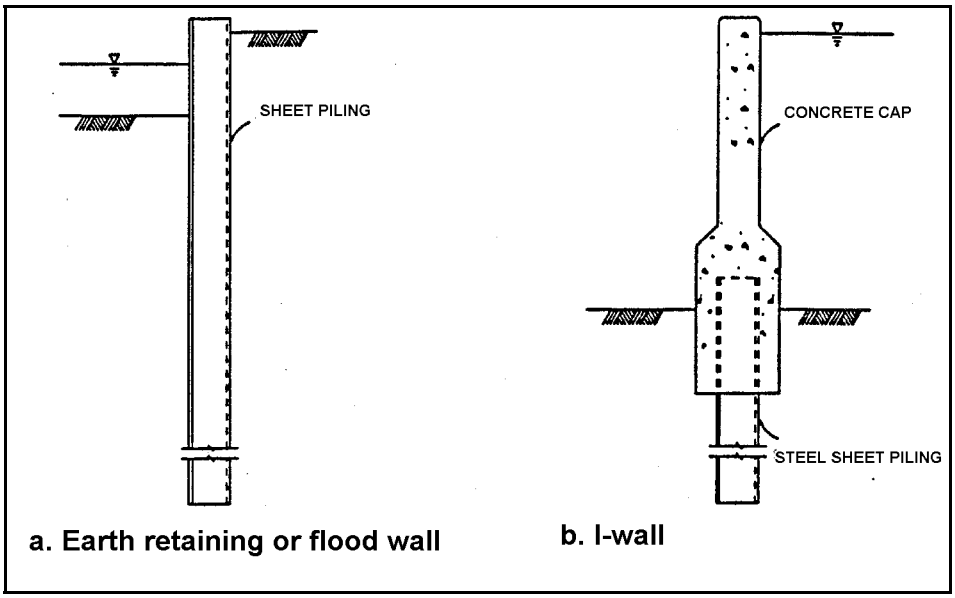

Exhibit 514c: Cantilever walls (Source: COE Engineering Manual)

- A geotechnical investigation should be conducted to identify foundation conditions, and to assist in the choice of pile material and design.
- An evaluation of system loads applied to the piling should be conducted prior to designing a wall. Loads governing the design arise primarily from the soil and water surrounding the wall, and other influences such as surface surcharges, and external loads applied directly to the piling.

MAINTENANCE

- Low.
- Uncapped, exposed sheet piling corrodes at varying rates averaging 2 - 10 mils per year, depending on surrounding atmospheric conditions. Sheetpiling driven into natural, undisturbed soils has a negligible corrosion rate. Increased erosion occurs with piles installed in organic or fresh fills.
- Wall settlement can jeopardize the overall integrity of the wall. The potential for settlement can be reduced by overbuilding the wall in excess of the settlement prediction.

REFERENCES

Related Practices

- Practice 507 Live Cribwalls.
- Practice 508 Stone Riprap.
- Practice 511 Concrete Retaining Walls.
- Practice 512 Gabion Retaining Walls.
- Practice 513 Timber Retaining Walls.
- Practice 515 Composite Retaining Walls.

Other Sources of Information

- COE Engineering Manual.

Last Print/Revision Date: October 13, 1996

PRACTICE 515
COMPOSITE RETAINING WALL (Soldier Pile with Sheeting)

DESCRIPTION

- A permanent retaining wall in which timber or pre-cast concrete are installed horizontally between steel I-beam piles.

Exhibit 515a: Composite Retaining Wall (Source: CBBEL Files)

PURPOSE

- Create a temporary or permanent wall that retains soils, usually along highly eroded and steep to sheer stream channels.

WHERE APPLICABLE

- Stream channels of all types and sizes.
- Stream channels with widely fluctuating water levels, and with high velocities.

ADVANTAGES

- Low maintenance.
- Provide permanent stability if necessary.
- Prevents erosion and scouring.
- May be used along channels where space prohibits the construction of other structures that require more space to work.
- May be more aesthetically acceptable than sheetpiling.

DISADVANTAGES

- Expensive.
- Requires heavy equipment.
- Should not be used in areas where boulders or bedrock would prevent driving piles to the appropriate depth.
- Should not be used to create very high walls in which the flexural strength of the wall might be compromised.
- Lacks ecological value and may be discouraged by agencies due to concerns about potential negative impacts of treated lumber or plastic especially where constant or considerable contact exists with water.
- May exacerbate downstream erosion problems if not installed properly.

- Requires professional design and geotechnical review.

DESIGN AND CONSTRUCTION GUIDELINES

Materials

- Steel I-beam piles.
- Pre-cast concrete sheets, tongue and groove wood planks, or railroad ties.

Installation

- Assemble general information: topographical and physical surveys, controlling dimensions.
- Analyze subsoil conditions.
- Analyze structural stability.
- Analyze foundation stability.
- Design structural elements.
- Predict settlement and movement of walls.

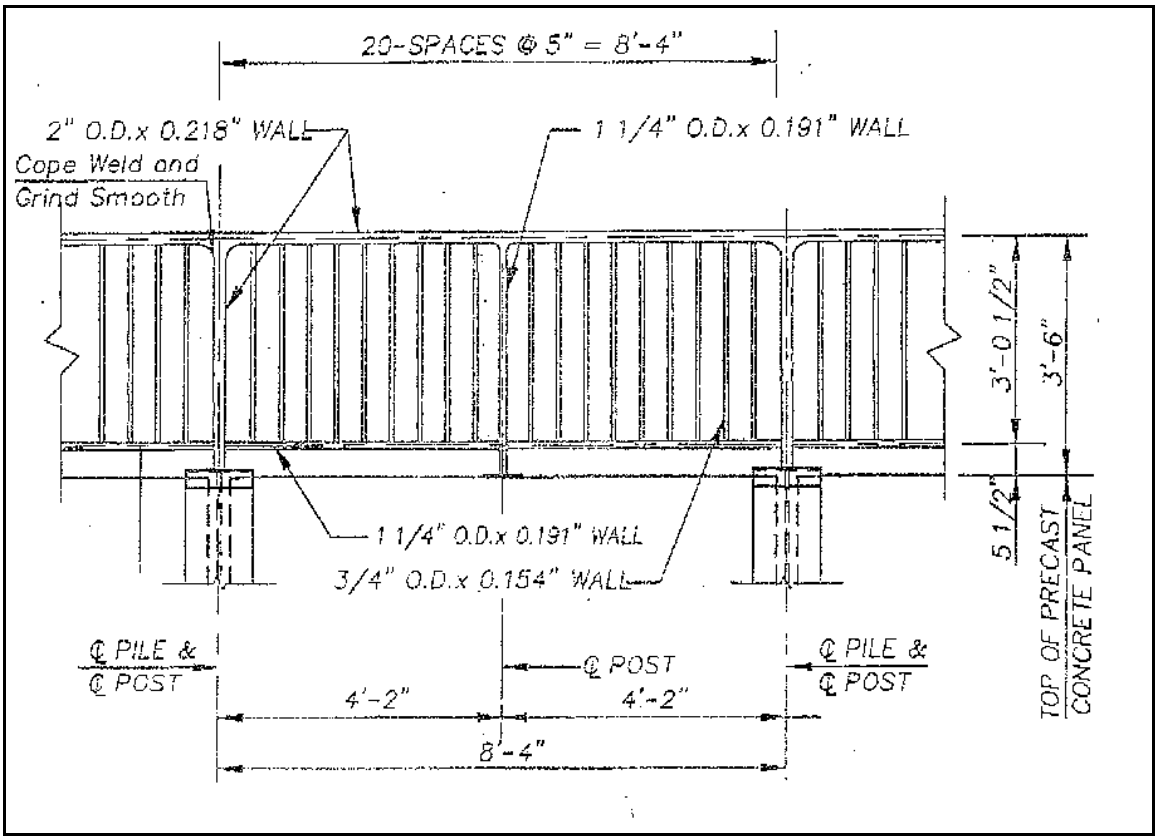

Exhibit 515b: Typical Example of a Composite Wall Design (Source: CBBEL Files)

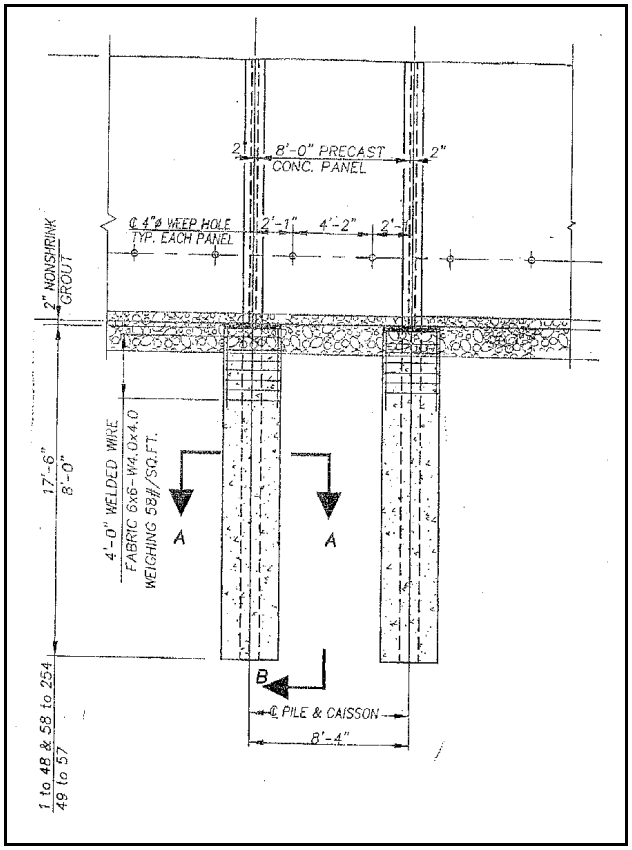

Exhibit 515c: Typical Example of a Composite Wall's Pile and Post Design Details (Source: CBBEL Files)

Special Considerations

- A geotechnical investigation should be conducted to identify foundation conditions, and to assist in the choice of pile material and design.
- An evaluation of system loads applied to the piling should be conducted prior to designing a wall. Loads governing the design arise primarily from the soil and water surround the wall, and other influences such as surface surcharges, and external loads applied directly to the piling.

MAINTENANCE

- Low.
- Wall settlement can jeopardize the overall integrity of the wall. The potential for settlement can be reduced by overbuilding the wall in excess of the settlement prediction.

REFERENCES

Related Practices

- Practice 510 Stone Riprap.
- Practice 511 Concrete Retaining Walls.
- Practice 512 Gabion Retaining Walls.
- Practice 513 Timber Retaining Walls.

Other Sources of Information

- COE Engineering Manual.

Last Print/Revision Date: October 13, 1996

APPENDIX 3

Conceptual Channel Excavation/Armoring Project

APPENDIX 4

Unit Discharge Calculations