CONTRACT DOCUMENTS AND SPECIFICATIONS

SMALL STRUCTURE # 21037 (BRIDGE # 311)

206th STREET / FINLEY CREEK

WASHINGTON TOWNSHIP

HAMILTON COUNTY, INDIANA

PB – 18 – 0003

Nick Bergman, P.E.

NICHOLAS D. BERGMAN
REGISTERED
No. 10707534
STATE OF
INDIANA
PROFESSIONAL ENGINEER

09/09/2020

Prepared For:
Hamilton County Highway Department
1700 South 10th Street
Noblesville, Indiana 46060

Prepared By:
Infrastructure Engineering, Inc.
201 South Capitol Avenue, Suite 490
Indianapolis, Indiana 46225

PAGE INTENTIONALLY LEFT BLANK

TABLE OF CONTENTS

DESCRIPTION **PAGE**

BIDDING REQUIREMENTS ***5***
NOTICE TO BIDDERS AND CONTRACTORS 7
Financial Statement ***7***
BID SEAL 9
PROPOSAL 11
ACKNOWLEDGMENT OF ADDENDA 13
ITEMIZED PROPOSAL 15
CONTRACT DOCUMENTS ***19***
BID BOND 21
PAYMENT BOND 23
PERFORMANCE BOND 25
NON-COLLUSION AFFIDAVIT 27
LEGAL STATUS OF BIDDER 29
EMPLOYMENT ELIGIBILITY CERTIFICATION 31
PROGRESS ESTIMATE 33
AFFIDAVIT AND WAIVER OF LIEN 35
CERTIFICATION LETTER 37
GENERAL PROVISIONS ***39***
GENERAL PROVISIONS INDEX 41
GENERAL PROVISIONS 43
SPECIAL PROVISIONS ***49***
SPECIAL PROVISIONS INDEX 51
SPECIAL PROVISIONS 53

APPENDIX
Appendix A – Form 96
Appendix B – Permits
Appendix C – Geotechnical Investigation
Appendix D – INDOT Recurring Special Provisions
Appendix E – Utility Information
Appendix F – Standard Drawings
Appendix G – Product Data Sheets

PAGE INTENTIONALLY LEFT BLANK

BIDDING REQUIREMENTS

PAGE INTENTIONALLY LEFT BLANK

NOTICE TO BIDDERS AND CONTRACTORS

Notice is hereby given that the Board of Commissioners of Hamilton County, Indiana, hereinafter referred to as the Owner, will receive sealed bids for the following project:

REPLACEMENT PLANS FOR SMALL STRUCTURE NO. 21037 (BRIDGE NO. 311)
206TH STREET OVER FINLEY CREEK
WASHINGTON TOWNSHIP, HAMILTON COUNTY, INDIANA
PB-18-0003

Proposals may be forwarded individually by registered mail or delivered in person, addressed to the Hamilton County Auditor, 33 North 9th Street, Suite L21, Noblesville, Indiana, 46060, until **11:30 a.m., October 28, 2020**. After 11:30 a.m. they can be delivered to the Auditor in the **Historic Courtroom on the second floor of the Historic Courthouse** up to the time of the noticed bid opening. Only proposals from those *CONTRACTORS* who are registered on the Indiana Department of Transportation's current listing of Prequalified Contractors for item D(A) "Bridges: Highway Over Water" will be considered. Any bids submitted by *CONTRACTORS* not approved for this item on the list will be returned to the bidder unopened.

All proposals will be considered by the *OWNER* at a public meeting held in the Hamilton County Historic Courthouse in Noblesville, Indiana, Historic Courtroom, and opened and read aloud at **1:00 p.m. local time, October 28, 2020**.

The work to be performed and the proposals to be submitted shall include a bid for all general construction, labor, material, tools, equipment, taxes, permits, licenses, insurance, service costs, etc. incidental to and required for this project.

All materials furnished and labor performed incidental to and required by the proper and satisfactory execution of the contracts to be made, shall be furnished and performed in accordance with requirements from the drawings and specifications included in these documents. Bidding documents will be available beginning at **9:00 am. on October 5, 2020**. Copies of the Proposal, Specifications, Contract Documents and Plans must be obtained from Reprographix (http://reprographix.com/) or contact Nick Bergman, P.E. at nbergman@infrastructure-eng.com for further information. **Cost for obtaining the Contract Document & Plans from Reprograhix will be around $75.00 without tax.** Payments and costs of Contract Documents are non-refundable. Interested parties can view the Contract Documents online at www.hamiltoncounty.in.gov. Documents posted on the county website are for informational purposes only. It shall be the responsibility of the individual to periodically check for addendums posted online. Contract Documents and Plans must be obtained through Reprographix to be eligible to bid on this contract.

Each proposal must be enclosed in a sealed envelope with the county supplied sealed bid notice, bearing the title of the project, bid opening date and the name and address of the bidder firmly affixed. **The bidder shall affix identifying tabs to the following sheets of each proposal:**

Form 96	*Financial Statement*
Non-Collusion Affidavit	*Receipt of Addendum (If Applicable)*
Bid Bond	*Itemized Proposal*
Employment Eligibility Verification Certification	

Each individual proposal shall be accompanied by a certified check or acceptable ***Bidder's Bond,*** made payable to the Hamilton County Auditor, in a sum of not less than ***ten percent*** of the total amount of the proposal, which check or bond will be held by the said Hamilton County Auditor as evidence that the bidder will, if awarded a contract, enter into the same with the *OWNER* upon notification from him to do so within ten days of said notification. Failure to execute the contract and to furnish performance bond to Hamilton County, Indiana, will be cause for forfeiture of the amount of money represented by the certified check, or bidder's bond, as and for liquidated damages. Form 96, as prescribed by the Indiana State Board of Accounts, shall be properly completed, and submitted with bid proposals. The Commissioners at their discretion reserve the right to waive any and all informalities in the bidding. All bids submitted shall be valid for 90 days from the opening of the bids.

Robin M. Mills
Hamilton County Auditor

Dated: September 21, 2020
Hamilton County Reporter: **October 5, 2020 and October 12, 2020**
Noblesville Times: **October 7, 2020 and October 14, 2020**

PAGE INTENTIONALLY LEFT BLANK

BID SEAL

NOTICE

Sealed Bid Documents shall contain on the outside of the sealed envelope the following completed self-sticking label:

SEALED BID DOCUMENTS

(To be completed by bidder before submission)

Equipment Type _____
Annual Bid Category #
Road Contract # / Bridge # (Desc.) _____
(Circle One)
Name of Bidder: _____
Bid Opening Date: _____
Other Documents Enclosed:

Bid Bond	(Y)	(N)
Certified Check	(Y)	(N)
Form HC BID 06 / 03	(Y)	(N)
Form 96	(Y)	(N)
Other	_____	

For Hamilton County Use Only!
Received by the Auditor
File Stamp

Time Received: _____

All mailer packers will be opened upon receipt.
Make sure the sealed envelope is contained within.

NOTICE

PAGE INTENTIONALLY LEFT BLANK

PROPOSAL

To the Board of County Commissioners of Hamilton County, of the State of Indiana; hereinafter referred to as OWNER:

SMALL STRUCTURE #21037 (BRIDGE # 311)
206th STREET / FINLEY CREEK
Washington Township
Hamilton County, Indiana
PB-18-0003

Pursuant to the legal notice that sealed proposals for the above project would be received by the Board of County Commissioners of Hamilton County, Indiana,

The undersigned hereby tenders this bid to construct the work in accordance with the plans, profiles, drawings, specifications, and all authorized revisions for this contract which are on file in the office of the Hamilton County Highway Department; and to furnish all necessary machinery, equipment, tools, labor and other means of construction and to furnish all material specified in the manner and at the time prescribed and under the supervision and direction of the OWNER or his duly authorized representative and pursuant to the terms of the Performance Bond and the Payment Bond in the amount of not less than One Hundred Percent (100%) of the amount of the Proposal, for the unit prices given on the attached Itemized Proposal dated June 28, 2001.

Together with this PROPOSAL, the undersigned has:

1. Filed an Itemized Proposal with a unit price for each item listed, together with a total amount for all items, based upon the unique characteristics of this contract;

2. Executed the Form No. 96 filed herewith;

3. Filed a properly executed Bid Bond or certified check made payable to the Hamilton County Treasurer herewith in an amount greater than or equal to ten percent (10%) of the total amount of this proposal;

4. Executed the Non-Collusion affidavit filed herewith;

5. Executed the Legal Status of Bidder Form filed herewith;

6. Filed a current Financial Statement herewith;

If awarded the contract, the undersigned promises to prosecute the work so as to complete the contract within the time specified in the Special Provisions.

Witness our hands this_____day of,_____20___.

Firm Name :_____

Address :_____

_____

_____

By :_____
(Signature)

Name :_____
(Printed)

Title :_____
(Printed)

ACKNOWLEDGMENT OF ADDENDA

The Contractor acknowledges receipt of the following addenda which are hereby made a part of this Construction Contract, as fully and effectually as if copied and set out herein in full length:

ADDENDUM NUMBER & DATE	SIGNATURE	DATE

PAGE INTENTIONALLY LEFT BLANK

ITEMIZED PROPOSAL

PROJECT: Small Structure #21037 (Bridge #331) 206th Street / Finley Creek

PB-18-0003

September 7, 2020

ITEM NO.	DESCRIPTION	UNIT	QUANITY	UNIT PRICE		EXTENSION	
				DOLLARS	CENTS	DOLLARS	CENTS
1	CONSTRUCTION ENGINEERING	LS	1.00				
2	MOBILIZATION AND DEMOBILIZATION	LS	1.00				
3	CLEARING RIGHT OF WAY	LS	1.00				
4	PRESENT STRUCTURE, REMOVE	LS	1.00				
*5	EXCAVATION, COMMON	CYS	803.00				
6	EXCAVATION, COMMON, UNDISTRIBUTED	CYS	50.00				
*7	BORROW	CYS	1400.00				
*8	EXCAVATION, WATERWAY	CYS	810.00				
9	EXCAVATION, WATERWAY, UNDISTRIBUTED	CYS	50.00				
10	STORM WATER MANAGEMENT BUDGET	DOL	6000.00				
11	SWQCP PREPARATION AND IMPLEMENTATION, LEVEL 2	LS	1.00				
*12	EXCAVATION, WET	CYS	585.00				
13	EXCAVATION, WET, UNDISTRIBUTED	CYS	50.00				
*14	SUBGRADE TREATMENT, TYPE II	SYS	168.00				
*15	SUBGRADE TREATMENT, TYPE IC MODIFIED	SYS	2466.00				
16	STRUCTURE BACKFILL, TYPE 1	CYS	243.00				
17	STRUCTURE BACKFILL, TYPE 2	CYS	18.00				
18	GEOTEXTILES FOR SUBGRADE TYPE 2A	SYS	2332.00				
*19	HIGH STRENGTH GEOTEXTILE, MIRAFI	SYS	4512.00				
*20	COMPACTED AGGREGATE NO. 8	CYS	637.00				
21	COMPACTED AGGREGATE NO. 53	TON	317.00				
22	MILLING, ASPHALT, 1 1/2 IN.	SYS	212.00				

* Paid per Planned Quantity

PROJECT: Small Structure #21037 (Bridge #331) 206th Street / Finley Creek

PB-18-0003

September 7, 2020

ITEM NO.	DESCRIPTION	UNIT	QUANITY	UNIT PRICE		EXTENSION	
				DOLLARS	CENTS	DOLLARS	CENTS
23	QC/QA-HMA, 2, 64, SURFACE, 9.5 mm	TON	185.00				
24	QC/QA-HMA, 2, 64, INTERMEDIATE, 19.0 mm	TON	288.00				
25	QC/QA-HMA, 2, 64, BASE, 25.0 mm	TON	460.00				
26	JOINT ADHESIVE, SURFACE	LFT	850.00				
27	JOINT ADHESIVE, INTERMEDIATE	LFT	950.00				
28	ASPHALT FOR TACK COAT	SYS	4493.00				
29	GUARDRAIL, TERMINAL SYSTEM, W-BEAM CURVED, TYPE 2	EACH	1.00				
30	GUARDRAIL, REMOVE	LFT	163.00				
31	GUARDRAIL, TRANSITION, TGS-1 MODIFIED	EACH	4.00				
32	GUARDRAIL, END TREATMENT, OS	EACH	3.00				
33	GUARDRAIL, W-BEAM, 6 FT 3 IN. SPACING	LFT	107.00				
34	HMA FOR APPROACHES, TYPE B	TON	37.00				
35	MAILBOX ASSEMBLY, SINGLE	EACH	1.00				
36	RIGHT-OF-WAY MARKERS	EACH	10.00				
37	RIPRAP, REVETMENT	TON	484.00				
38	GEOTEXTILE FOR RIPRAP TYPE 3	SYS	323.00				
39	MOBILIZATION AND DEMOBILIZATION FOR SEEDING	EACH	1.00				
40	CHANNEL REVEGETATION SEED MIX	SYS	120.00				
41	MULCHED SEEDING R	SYS	2670.00				
42	CONCRETE, A, SUBSTRUCTURE	CYS	13.00				
43	REINFORCING BARS, EPOXY COATED	LBS	5065.00				
44	CONCRETE, C, SUPERSTRUCUTRE	CYS	42.00				
45	RAILING, STEEL TS-1	LFT	91.00				

* Paid per Planned Quantity

PROJECT: Small Structure #21037 (Bridge #331) 206th Street / Finley Creek

PB-18-0003

September 7, 2020

ITEM NO.	DESCRIPTION	UNIT	QUANITY	UNIT PRICE		EXTENSION	
				DOLLARS	CENTS	DOLLARS	CENTS
46	STRUCTURAL MEMBER, CONCRETE, BOX BEAM, 17 IN. X 36 IN.	LFT	556.00				
47	SURFACE SEAL	LS	1.00				
48	PIPE, TYPE 1, CIRCULAR, 24 IN.	LFT	226.00				
49	PIPE, TYPE 3, CIRCULAR, 18 IN.	LFT	50.00				
50	PIPE END SECTION, DIAMETER 18 IN.	EACH	2.00				
51	PIPE END SECTION, DIAMETER 24 IN.	EACH	6.00				
52	PIPE, FIELD TILE, 6 IN., UNDISTRIBUTED	LFT	50.00				
53	PIPE, FIELD TILE, 8 IN., UNDISTRIBUTED	LFT	50.00				
54	PIPE, FIELD TILE, 10 IN., UNDISTRIBUTED	LFT	50.00				
55	PIPE, FIELD TILE, 12 IN., UNDISTRIBUTED	LFT	50.00				
56	PIPE, FIELD TILE, 15 IN., UNDISTRIBUTED	LFT	50.00				
57	LEVELING PAD, CONCRETE	LFT	163.00				
*58	MODULAR BLOCK WALL (SPILT FACE)	SFT	1835.00				
*59	MODULAR BLOCK WALL (SOILD)	SFT	1045.00				
*60	MODULAR BLOCK WALL ERECTION	SFT	2880.00				
61	CONSTRUCTION SIGN, C	EACH	2.00				
62	ROAD CLOSURE SIGN ASSEMBLY	EACH	5.00				
63	DETOUR ROUTE MARKER ASSEMBLY	EACH	27.00				
64	CONSTRUCTION SIGN, A	EACH	14.00				
65	CONSTRUCTION SIGN, B	EACH	2.00				
66	MAINTAINING TRAFFIC	LS	1.00				
67	BARRICADE, III-A	LFT	48.00				
68	BARRICADE, III-B	LFT	24.00				

* Paid per Planned Quantity

PROJECT: Small Structure #21037 (Bridge #331) 206th Street / Finley Creek

PB-18-0003

September 7, 2020

ITEM NO.	DESCRIPTION	UNIT	QUANITY	UNIT PRICE		EXTENSION	
				DOLLARS	CENTS	DOLLARS	CENTS
69	LINE, PAINT, BROKEN, YELLOW, 4 IN.	LFT	225.00				
70	LINE, PAINT, SOLID, WHITE, 4 IN.	LFT	1800.00				
71	LINE, PAINT, SOILD, YELLOW, 4 IN.	LFT	512.00				

* Paid per Planned Quantity

CONTRACT DOCUMENTS

PAGE INTENTIONALLY LEFT BLANK

BID BOND

KNOWN BY ALL PERSONS BY THESE PRESENTS THAT THE UNDERSIGNED:

BIDDER :_____

_____

as principal, and

SURETY: [Name] _____

[Address] _____

_____

as Surety,

are firmly bound unto Hamilton County, Indiana in the full and just sum of an amount equal to TEN PERCENT of the amount of the Principal's bid, to the payment of which, well and truly to be made, we bind ourselves jointly and severally, and our joint and several heirs, executors, administrators and assigns, firmly by these presents.

THE CONDITIONS OF THE ABOVE OBLIGATIONS ARE SUCH THAT, whereas, the Principal is herewith submitting a bid and proposal for construction and completion of this contract in accordance with plans and specifications, which are made part of this bond;

NOW, THEREFORE, if Hamilton County shall award the Principal the contract and the Principal shall promptly, enter into contract with Hamilton County, then this obligation shall be void; otherwise to remain in full force, virtue, and effect.

IT IS AGREED that no modifications, omissions, or additions in or to the terms of such contract or in or to the plans or specifications therefor shall affect the obligation of such sureties on this bond.

IN WITNESS WHEREOF, we hereto set our hands and seals:

< <BIDDER > >

(Bid Bond)

_____
(Signature)

_____
(Printed)

_____
(Title)

State of Indiana, County of,_____, SS:
Before me, the undersigned Notary Public, personally appeared;
_____ As Principal and acknowledged the execution of the above bond on this_____Day of _____, 20___.
My commission Expires:_____

_____
(County of Residence) (Notary Signature & Seal)

< <SURETY > >

(Bid Bond)

_____
(Signature)

_____
(Printed)

_____
(Title)

State of Indiana, County of, , SS:
Before me, the undersigned Notary Public, personally appeared;
_____ As Principal and acknowledged the execution of the above bond on this_____Day of_____, 20___.
My commission Expires:

_____
(County of Residence) (Notary Signature & Seal)

PAYMENT BOND

KNOWN BY ALL PERSONS BY THESE PRESENTS THAT THE UNDERSIGNED:

BIDDER:_____

_____

as principal, and SURETY:

[Name] _____

[Address] _____

_____

as Surety,

are firmly bound unto Hamilton County, Indiana in the penal sum of an amount equal to ONE HUNDRED PERCENT of the amount of the Principal's bid, to the payment of which, well and truly made, we bind ourselves jointly and severally, and our joint and several heirs, executors, administrators and assigns, firmly by these presents.

THE CONDITIONS OF THE ABOVE OBLIGATIONS ARE SUCH THAT, whereas, the Principal is herewith submitting a bid and proposal for construction and completion of this contract in accordance with plans and specifications, which are made part of this bond;

NOW, THEREFORE, if Hamilton County shall award the Principal the contract for work and the Principal shall promptly enter into contract with Hamilton County, for the work and shall promptly make payments of all amounts due to all Claimants, then this obligation shall be void; otherwise to remain in full force, virtue, and effect. Claimant shall mean any subcontractor, material supplier or the person, firm, or corporation furnishing materials or equipment for or performing labor or services in the prosecution of the work provided in such an agreement, including lubricants, oil, gasoline, coal, and coke, repairs on machinery, and tools, whether consumed or used in connection with the construction of such work, and all insurance premiums on said work, and for all labor, performed in such work.

IT IS AGREED that no modifications, omissions, or additions in or to the terms of such contract or in or to the plans or specifications therefor shall affect the obligation of such sureties on this bond.

IN WITNESS WHEREOF, we hereto set our hands and seals:

< <BIDDER > >

(Payment Bond)

_____
(Signature)

_____
(Printed)

_____
(Title)

State of Indiana, County of,_____, SS:
Before me, the undersigned Notary Public, personally appeared;
_____ As Principal and acknowledged the execution of the above bond on this_____Day of_____, 20___.
My commission Expires:

_____
(County of Residence) (Notary Signature & Seal)

< <SURETY > >
(Payment Bond)

_____
(Signature)

_____
(Printed)

_____
(Title)

State of Indiana, County of,_____, SS:
Before me, the undersigned Notary Public, personally appeared;
_____ As Principal and acknowledged the execution of the above bond on this_____Day of_____, 20___.

My commission Expires: _____

_____
(County of Residence) (Notary Signature & Seal)

PERFORMANCE BOND

KNOWN BY ALL PERSONS BY THESE PRESENTS THAT THE UNDERSIGNED:

BIDDER_____:_____

_____

as principal, and SURETY:

[Name] _____

[Address] _____

_____

as Surety,

are firmly bound unto Hamilton County, Indiana in the penal sum of an amount equal to ONE HUNDRED PERCENT of the amount of the Principal's bid, to the payment of which, well and truly made, we bind ourselves jointly and severally, and our joint and several heirs, executors, administrators and assigns, firmly by these presents.

THE CONDITIONS OF THE ABOVE OBLIGATIONS ARE SUCH THAT, whereas, the Principal is herewith submitting a bid and proposal for construction and completion of this contract in accordance with plans and specifications, which are made part of this bond;

NOW, THEREFORE, if Hamilton County shall award the Principal the contract for work and the Principal shall promptly enter into contract with Hamilton County, for the work and shall well and faithfully do and perform the same in all respects according to the plans and specifications and according to the time, terms, and conditions specified in this contract to be entered into, and in accordance with all requirements of law and shall promptly pay all debts incurred by the Principal or a subcontractor in the construction of the work, including labor, service, and materials furnished, and shall remain in effect at least until one year after the date when final payment becomes due, then this obligation shall be void; otherwise to remain in full force, virtue, and effect.

IT IS AGREED that no modifications, omissions, or additions in or to the terms of such contract or in or to the plans or specifications therefor shall affect the obligation of such sureties on this bond.

IN WITNESS WHEREOF, we hereto set our hands and seals:

< <BIDDER > >
(Performance Bond)

_____
(Signature)

_____
(Printed)

_____
(Title)

State of Indiana, County of,_____, SS:
Before me, the undersigned Notary Public, personally appeared;
_____ As Principal and acknowledged the execution of the above bond on this_____Day of_____, 20___.
My commission Expires: _____

_____
(County of Residence) (Notary Signature & Seal)

< <SURETY > >
(Performance Bond)

_____
(Signature)

_____
(Printed)

_____
(Title)

State of Indiana, County of,_____, SS:
Before me, the undersigned Notary Public, personally appeared;
_____ As Principal and acknowledged the execution of the above bond on this_____Day of _____, 20___.
My commission Expires: _____

_____
(County of Residence) (Notary Signature & Seal)

NON-COLLUSION AFFIDAVIT

STATE OF _____)
) SS
COUNTY OF _____)

The undersigned contractor, being duly sworn, on oath, says that he has not, nor has any other member, representative, or agent of the firm, company, corporation or partnership represented by it, entered into any combination, collusion or agreement with any person relative to the price to be bid by anyone, nor to prevent any person from bidding nor to induce anyone to refrain from bidding, and that this bid is made without reference to any other bid and without any agreement, understanding or combination with any other person in reference to such bidding in any way or manner whatever.

BY :_____
(Signature)

_____
(Title)

FOR :_____
(Firm or Corporation)

State of Indiana, County of,_____, SS:
Before me, the undersigned Notary Public, personally appeared;
_____ As Principal and acknowledged the execution of the above bond on this_____Day of _____, 20___.
My commission Expires: _____

_____
(County of Residence) (Notary Signature & Seal)

PAGE INTENTIONALLY LEFT BLANK

LEGAL STATUS OF BIDDER

This Proposal is submitted in the name of:

Firm Name_____

The undersigned hereby designates below his business address to which all notices, directions or other communications may be served or mailed:

Street :_____

City :_____

State :_____Zip Code:_____

The undersigned hereby declares that he has legal status checked below:

( ) INDIVIDUAL
( ) INDIVIDUAL DOING BUSINESS UNDER AN ASSUMED NAME
( ) CO-PARTNERSHIP (The Assumed name of the partnership is registered in the County of , Indiana.
( ) CORPORATION INCORPORATED UNDER THE LAWS OF THE STATE OF . The Corporation is:
( ) LICENSED TO DO BUSINESS IN INDIANA
( ) NOT NOW LICENSED TO DO BUSINESS IN INDIANA

The name, titles and home address of all persons who are officers or Partners in the organization are as follows:

NAME AND TITLE_____ HOME ADDRESS

_____

_____

_____

Signed and Sealed this_____day of _____. 20___.

By_____
(Signature)

_____
(Printed)

_____
(Title)

PAGE INTENTIONALLY LEFT BLANK

EMPLOYMENT ELIGIBILITY CERTIFICATION

This Certification is submitted by the undersigned,_____ _____, as part of the contract with Hamilton County for the project known as_____ _____entered into on the_____day of _____, 20_. The undersigned affirms under the penalties of perjury that the Contractor does not knowingly employ an unauthorized alien.

The Contractor shall enroll in and verify the work eligibility status of all newly hired employees through the E-Verify program as defined in IC 22-5-1.7-3. The Contractor is not required to participate if the Contractor is self-employed and does not employ any employees.

The Contractor shall not knowingly employ or contract with an unauthorized alien. The Contractor shall not retain an employee or contract with a person that the Contractor subsequently learns is an unauthorized alien.

The Contractor shall require all subcontractors who perform work under its contract, to certify to the Contractor that:

- The subcontractor does not knowingly employ or contract with an unauthorized alien;
- The subcontractor has enrolled and is participating in the E-Verify program. The Contractor agrees to maintain this certification at least two years after the term of a contract with a subcontractor.

The County may terminate the contract if the Contractor fails to cure a breach of this provision no later than thirty (30) days after being notified by the County. The terms of this Certification shall be incorporated within the contract between the Contractor and the County.

I,_____, verify under the penalties of perjury that the facts set out in the above Employment Eligibility Certification are true.

Witness this_____day of_____. 20_____

Contractor: _____

Address: _____

Signature: _____

Printed: _____ Title: _____

PAGE INTENTIONALLY LEFT BLANK

PROGRESS ESTIMATE

HAMILTON COUNTY
HIGHWAY DEPARTMENT
1700 SOUTH 10TH STREET
NOBLESVILLE, IN 46060
(317) 773 – 7770 Office
(317) 776 – 9814 Fax

PROJECT: REPLACEMENT OF SMALL STRUCTURE NO 21037 (BRIDGE NO 311)
206TH STREET / FINLEY CREEK
PB – 18 – 0003

PROGRESS ESTIMATE NO: _____

PARTIAL ☐ FINAL ☐

PAY NO.	ITEM	UNITS	UNIT PRICE	PLAN QUANTITY	QUANTITY THIS ESTIMATE	QUANTITY TO DATE	EXTENSION

CONTRACTOR :_____ TOTAL EARNINGS TO DATE : _____

BY :_____DATE:_____ LESS RETAINED PERCENTAGE : _____

APPROVED BY :_____DATE:_____ PREVIOUS AMOUNT : _____

APPROVED BY :_____DATE:_____ AMOUNT DUE CONTRACTOR : _____

APPROVED BY :_____DATE:_____AMOUNT DUE CONTRACTOR :

CHANGE ORDER

HCHD FORM 1063 REV 05-02-02

HAMILTON COUNTY HIGHWAY DEPARTMENT

Page: _____

CHANGE ORDER

Project No. _____ Contract No. _____

Project Description: _____ Change Order No. _____

Whereas, the Standard Specifications for this contract provides for such work to be performed, the following change is recommended. (Give location, description and reason)

_____

_____

_____

_____

ITEM NO.	DESCRIPTION OF ITEM	UNIT	UNIT PRICE	INCREASE		DECREASE		% CHANGE	
				QUANTITY	AMOUNT	QUANTITY	AMOUNT	THIS C.O.	TO DATE
	PLACE EW FOR EXTRA WORK ITEMS PLACE FA FOR FORCE ACCOUNT ITEMS		TOTALS						
			NET	XXXXXXXXX XXXXXXXX	ESTIMATED COST		$		-

This contract has been extended / reduced (circle one) by 0 work / calendar (circle one) days or the completion d has been moved to 0 to accommodate the changes made in this change order. It is the intent of the parties that this change order is full and complete compensation for the work described above. Notification and consent to this change in plans is hereby acknowledged.

Contractor : _____ By: _____ Date: _____

Submitted for Consideration	
Project Engineer	Construction Engineer
County Engineer	Highway Director

Title: _____

_____

_____

_____

AFFIDAVIT AND WAIVER OF LIEN

☐ Final ☐ Partial ☐ Payment to Follow

State of Indiana, County of_____SS

_____ Being duly sworn states that he is the_____of
(Name of Officer) (Title)

_____having contracted with_____to furnishcertain

materials and/or labor as follows_____
(Description)

for the project known as_____Replacement of Small Structure 21037 (Bridge No. 311)_____

located at 206th Street / Finley Creek_____and owned by Hamilton County____
(Owner)

and does hereby further state on behalf of the aforementioned subcontractor/supplier:

(*PARTIAL WAIVER*) that there is due from the CONTRACTOR the sum of (in writing):

_____Dollars ($_____)

( ) receipt of which is hereby acknowledged; or

( ) the payment of which has been promised as the sole consideration of this affidavit and Partial Waiver of Lien which is given solely with respect to said amount and which waiver shall be effective only upon receipt of payment thereof by the undersigned:

(*FINAL WAIVER*) that the final balance due from the CONTRACTOR is the sum of (in writing):

_____ Dollars ($_____)

( ) receipt of which is hereby acknowledged or

( ) the payment of which has been promised as the sole consideration for the Affidavit and Final Waiver of Lien which shall become effective upon receipt of such payment

THEREFORE, the undersigned waives and releases unto the OWNER of said premises, any and all lien or claim whatsoever on the above-described property and improvements thereon on account of LABOR or material or both, furnished by the undersigned thereto, subject to limitations or conditions expressed herein, if any; and further certifies that no other party has any claim or right to a lien on account of any work performed or material furnished to the undersigned for said project, and within the scope of this affidavit and waiver.

_____By_____Title_____
(Firm) (Authorized Representative)

WITNESS MY HAND AND NOTARIAL SEAL this_____day of_____20____

_____
(Notary Public)

_____
(Printed)

My Commision Expires _____

Residing in _____ County, _____

PAGE INTENTIONALLY LEFT BLANK

CERTIFICATION LETTER

TO BE COMPLETED BY ALL SUB-CONTRACTORS AND MATERIAL SUPPLIERS

Reference:

REPLACEMENT OF SMALL STRUCTURE # 21037 (BRIDGE # 311)
206TH STREET / FINLEY CREEK
Washington Township
Hamilton County, Indiana

We hereby certify that we have examined the Contract Plans and Specifications for this project and that all materials and workmanship will be in strict compliance therewith.

_____
Company Name

_____
Address

_____

_____

By_____
(Signature)

_____
(Printed)

_____
(Title)

Date_____

Describe Item of work or material to be furnished:

PAGE INTENTIONALLY LEFT BLANK

GENERAL PROVISIONS

PAGE INTENTIONALLY LEFT BLANK

GENERAL PROVISIONS INDEX

#	DESCRIPTION	PAGE
GP 1	CONTRACT QUESTIONS	43
GP 2	PUBLIC OPENING OF BIDS	43
GP 3	NOTIFICATION OF WORK SCHEDULE	43
GP 4	WARRANTY OF WORK	43
GP 5	EXAMINATION OF THE PROJECT SITE	43
GP 6	CONTRACT DOCUMENTS	44
GP 7	CONTRACTOR	44
GP 8	OWNER	44
GP 9	ENGINEER	44
GP 10	COUNTY	44
GP 11	PRE-QUALIFICATION AND BIDDING	44
GP 12	AWARD OF CONTRACT	45
GP 13	PROOF OF INSURANCE	45
GP 14	ADDITIONAL INSURED	45
GP 15	INSURANCE	45
GP 16	INSPECTION OF WORK	45
GP 17	STANDARDS OF QUALITY	46
GP 18	UTILITIES	46
GP 19	PROGRESS SCHEDULE	46
GP 20	SUPERVISION	46
GP 21	RESIDENT SUPERINTENDENT	46
GP 22	NOTIFICATION OF WORK SCHEDULE	47
GP 23	PERMITS	47
GP 24	TRAFFIC CONTROL FOR CONSTRUCTION AND MAINTENANCE OPERATION	47

PAGE INTENTIONALLY LEFT BLANK

GENERAL PROVISIONS

GP 1 CONTRACT QUESTIONS

Submit all questions in writing via letter or email to Infrastructure Engineering, Inc.; ATTN: Nick Bergman; 201 South Capitol Avenue, Suite 490; Indianapolis, IN 46225; nbergman@infrastructure-eng.com prior to 9:00 a.m. local time October 26, 2020. A written response will be faxed and mailed to the addresses on the Record of Plans Purchased that is required to be filled out by anyone purchasing plans. No questions will be answered by telephone.

GP 2 PUBLIC OPENING OF BIDS

Bids will be opened publicly and read aloud at 1:00 p.m. local time October 26, 2020 in the Hamilton County Government & Judicial Center in Noblesville, Indiana, Commissioner's Courtroom. Bidders, or their authorized agents, are invited to be present. Any Bids received after 12:30 p.m. local time October 26, 2020 will be returned to the bidder unopened.

GP 3 NOTIFICATION OF WORK SCHEDULE

The CONTRACTOR shall provide a listing of the next workday's work activities by 12:00 p.m. of that day's work for the ENGINEER'S scheduling and inspection. All work scheduled for Monday shall be provided on Friday of the preceding week.

Failure to provide such notice within the specified time may result in the failure of the ENGINEER to pay for any material placed that day.

GP 4 WARRANTY OF WORK

The CONTRACTOR warrants and guarantees for **one year** after final acceptance of the contract, to the OWNER that all work will be performed, supplied, furnished and installed, and that the work will perform in strict accordance with the Contract Documents and will not be defective. Notice of all work determined or suspected to be defective or not in conformity with the Contract Documents shall be given to the CONTRACTOR within reasonable time after observance thereof.

GP 5 EXAMINATION OF THE PROJECT SITE

Before the bid date, all bidders shall carefully and thoroughly examine the entire site of the proposed work, adjacent premises, various means of approach, access thereto by means of a site inspection visit, and make all necessary investigations to inform themselves thoroughly as to the facilities necessary for delivering, placing, and operating the necessary construction equipment, and for delivering and handling materials at the site, and shall inform themselves thoroughly as to any and all actual or potential difficulties, hindrances, delays, and constraints involved in the commencement, prosecution and completion of the proposed work in accordance with the

requirements of this contract. The CONTRACTOR, by the execution of the Contract, shall in no way be relieved of any obligation under it, due to his failure to receive or examine any form or legal instrument, or to visit the site and acquaint himself with the conditions there existing. The OWNER will be justified in rejecting any claim based on facts, which he should have noticed as a result thereof.

GP 6 CONTRACT DOCUMENTS

The Indiana Department of Transportation, Standard Specifications dated 2020 together with most recently published Supplemental Specifications shall be used in conjunction with these Plans, Contract Forms, General Provision, Special Provisions, Modifications to the Specifications, Standard Sheets and any addenda which may be issued for this project.

It is the intent of these Contract Documents to describe a functionally complete project (or part thereof) to be constructed in accordance therewith. Any work, materials or equipment that may reasonably be inferred will be supplied whether or not specifically called for.

Wherever reference is made to the Indiana Department of Transportation, Director, or Chief Highway Engineer, it shall be interpreted as the Board of County Commissioners of Hamilton County, Indiana.

GP 7 CONTRACTOR

The Firm or Corporation with whom the OWNER has entered into the Construction Contract.

GP 8 OWNER

The Board of County Commissioners of Hamilton County, Indiana

GP 9 ENGINEER

Hamilton County Highway Engineer or its authorized representative.

GP 10 COUNTY

County of Hamilton, State of Indiana.

GP 11 PRE-QUALIFICATION AND BIDDING

Contractor shall meet all the requirements setout in Section 102.00. Only bids from those CONTRACTORS who are currently registered on the Indiana Department of Transportation's listing of Prequalified Contractors for items D(A) "Bridges: Highway Over Water" will be considered. Any bids submitted by CONTRACTORS not on this list will be returned to the bidder unopened.

GP 12 AWARD OF CONTRACT

The OWNER reserves the right to reject any or all bids or to waive any informalities and to accept the bid, which it deems favorable to the interest of the OWNER after all bids have been examined and scrutinized.

GP 13 PROOF OF INSURANCE

CONTRACTOR shall not commence work until he has obtained all insurance specified herein, has filed with the OWNER one (1) copy of Certificate of insurance, and such insurance has been approved by the OWNER.

Should any coverage approach expiration during the Contract period, it shall be renewed prior to its expiration, and certificate again filed with the OWNER. If any of such policies are canceled or are changed so as to reduce the coverage evidenced by the Certificate, at least ten (10) days prior written notice by registered mail of such cancellation or change shall be sent to the OWNER.

All insurance provided for under this Section shall be written by Insurance Companies licensed to do business in Indiana and countersigned by registered Indiana agent. The insurance company shall file with the OWNER, one (1) copy of Affirmation of Authority, on the form furnished by the OWNER, as verification of the resident agent.

All insurance shall be maintained in full force and effect until the Contract has been fully and completely performed.

GP 14 ADDITIONAL INSURED

Contractor shall submit Certificate of Insurance indicating the above necessary coverage as well as naming OWNER, its employees and representatives and ENGINEER as Additional Insured on all policies except Worker's Compensation.

GP 15 INSURANCE

Hamilton County's insurance requirements can be found at
https://www.hamiltoncounty.in.gov/1645/Certificates-Of-Insurance

The Standard + Pollution contractual insurance requirements are required for this project.

GP 16 INSPECTION OF WORK

The ENGINEER and his representatives shall at all times have access to the work wherever it is in preparation or in progress.

If the specifications, the ENGINEER's instructions, laws, ordinances or any public authority

requires any work to be specially tested or approved, the CONTRACTOR shall give the ENGINEER timely notice of its readiness for inspection and, if the inspection is by an authority other than the ENGINEER, the date fixed for such inspection. If any work should be covered up without the approval or consent of the ENGINEER, it must, if required by the ENGINEER, be uncovered for examination at the CONTRACTOR'S expense.

GP 17 STANDARDS OF QUALITY

All materials and equipment shall be of good quality and new, except as otherwise provided in the Contract Documents. All warranties and guarantees specifically called for in the Contract Documents shall expressly run for the benefit of the OWNER. If requested by the ENGINEER, the CONTRACTOR shall furnish satisfactory evidence as to the kind and quality of materials and equipment.

GP 18 UTILITIES

The CONTRACTOR shall be responsible for contacting and coordinating with all utilities affected by this project. Contract time will be charged unless the CONTRACTOR can show written evidence that he is making every possible effort on his part to get the utility work completed.

GP 19 PROGRESS SCHEDULE

Within ten days after the date of the Notice to Proceed, the CONTRACTOR shall submit to the ENGINEER for review a proposed schedule indicating the starting and completion dates of the various stages of the work to be performed under this contract. The ENGINEER shall review the proposed schedule to determine conformity with the contract and will make recommendations to the OWNER concerning approval thereof; however the review, approval or other action taken by the ENGINEER or OWNER in respect of such schedules shall not relieve the CONTRACTOR of its obligations to perform the work within the contract schedule(s).

GP 20 SUPERVISION

The CONTRACTOR shall supervise and direct the work completely and efficiently devoting such attention thereto and applying such skills and expertise as may be necessary to perform the work in accordance with the Contract Documents.

GP 21 RESIDENT SUPERINTENDENT

The CONTRACTOR shall keep on the work site at all times during its progress, a competent resident superintendent, who shall not be replaced without written notice to the ENGINEER except under extraordinary circumstances. The superintendent will be the CONTRACTOR's representative at the site and shall have authority to act on behalf of the CONTRACTOR. All communications given to the superintendent shall be as binding as if given to the CONTRACTOR.

GP 22 NOTIFICATION OF WORK SCHEDULE

The CONTRACTOR shall provide a listing of the next work day's work activities by 12:00 p.m. of that day's work for the ENGINEER'S scheduling and inspection. All work scheduled for Monday shall be provided on Friday of the preceding week.

Failure to provide such notice within the specified time may result in the failure of the ENGINEER to pay for any material placed that day.

GP 23 PERMITS

All permits and licenses which may be required due to construction methods such as, but not limited to, borrow or disposal pits, steam crossings, causeways, work bridges, cofferdams, etc., but which are not part of the contract documents shall be procured by the CONTRACTOR prior to beginning the work which requires the permit.

All charges, fees, and taxes shall be paid, and all notices necessary and incidental to the due and lawful prosecution of the work shall be given.

GP 24 TRAFFIC CONTROL FOR CONSTRUCTION AND MAINTENANCE OPERATION

This work shall consist of furnishing, installing, and maintaining signs, barricades, temporary traffic control devices or adjustments, labor, materials, etc., necessary for the maintenance of traffic as called for within the Contract Documents, or as permitted by the ENGINEER and not specifically called out in the Itemized Proposal or specified within the Contract Documents as to the manner of payment, shall be included in the Lump Sum price for maintaining traffic as described within the Contract Documents and the applicable provisions of the Section 105.13 and 108.03 and as set out in the Itemized Proposal. Construction Warning Lights, Type "A" shall be placed on all barricades and Road Construction Ahead signs as per Section 801.14.

PRIOR TO CLOSING ROADS TO TRAFFIC

This work shall consist of CONTRACTOR notifying U.S. Post Office, affected schools, and all Emergency Response Agency's, which shall include but not limited to County Sheriff's, Local Police, and Hospitals, of the road closure. A list containing all notified agencies shall be furnished to the ENGINEER within 24 hours of the notification to these agencies. Road Closure signs (XG20-5) shall be in placed minimum of two weeks prior to the actual road closure or unless specifically stated in contract document. It shall be CONTRACTOR responsibility to notify the ENGINEER in writing of road closure minimum of three weeks in advance for its approval.

AFTER OPENING ROADS TO TRAFFIC

This work shall consist of Contractor notifying U.S. Post Office, affected schools, and all Emergency Response Agency's, which shall include but not limited to County Sheriff's, Local Police, and Hospitals, of the road opening. A list containing all notified agencies shall be furnished to the ENGINEER within 24 hours of the notification to these agencies. At any time,

CONTRACTOR fails to open the roads or specific roads within the specified time frame as setout in the Contract Documents. Then CONTRACTOR shall pay liquidated damages as set forth elsewhere herein.

This cost shall include all labor, material, equipment, and supervision necessary to maintain Road Closure and Traffic Control for Construction and Maintenance Operation shall be included in the pay item identified as “Maintenance of Traffic”, LSUM.

SPECIAL PROVISIONS

PAGE INTENTIONALLY LEFT BLANK

SPECIAL PROVISIONS INDEX

#	DESCRIPTION	PAGE
SP1.	SCOPE OF WORK	53
SP2.	STANDARD SPECIFICATIONS	53
SP3.	NOTICE TO PROCEED AND CONTRACT SCHEDULE	53
SP4.	PREQUALIFIED CONTRACTOR REQUIREMENT	54
SP5.	PRE-BID MEETING	54
SP6.	PRE-CONSTRUCTION CONFERENCE	54
SP7.	COORDINATION	54
SP8.	VERIFICATION OF WORK	55
SP9.	LIQUIDATED DAMAGES	55
SP10.	DECREASED OR INCREASED QUANTITIES OF WORK	55
SP11.	PARTIAL PAYMENTS	55
SP12.	FINAL PAYMENT	56
SP13.	EXISTING CONDITIONS	56
SP14.	“AS BUILT” DRAWINGS	56
SP15.	TESTING OF MATERIALS	56
SP16.	UTILITY INFORMATION	58
SP17.	PERMITS	59
SP18.	RECURRING AND UNIQUIE SPECIAL PROVISIONS	60
SP19.	RIGHT-OF-WAY	60
SP20.	CLEARING RIGHT-OF-WAY	60
SP21.	OPEN BURNING OF NATURAL GROWTH	61
SP22.	RESTORATION OF DISTURBED AREAS	61
SP23.	GEOTECHNICAL INVESTIGATION REPORT	61
SP24.	PRESENT STRUCTURE, REMOVE	61
SP25.	COMMON EXCAVATION, UNDISTRIBUTED	61
SP26.	WET EXCAVATION, UNDISTRIBUTED	61
SP27.	WATERWAY EXCAVATION, UNDISTRIBUTED	62
SP28.	STOCKPILE LOCATION	62
SP29.	GUARDRAIL POSTS	62
SP30.	RIPRAP	62
SP31.	SEEDING	62
SP32.	SEEDING OUTSIDE CONSTRUCTION LIMITS	62
SP33.	MULCHED SEEDING AND BARE OR THINLY VEGETATED AREAS	62
SP34.	TS-1 RAIL AND GUARDRAIL TRANSITION TGS-1	63
SP35.	PROTECTION OF FIELD TILE	63
SP36.	ANIMAL GUARD IN FIELD TILES	63
SP37.	SURFACE SEALING	63
SP38.	MODULAR CONCRETE BLOCK RETAINING WALL	64
SP39.	ROAD CLOSURE SIGN ASSEMBLY	70
SP40.	DETOUR ROUTE MARKER ASSEMBLY	70
SP41.	DISPOSAL OF EXCESS MATERIAL	70

SP42. DELETION OF WORK 71
SP43. EMBANKMENT OVER EXISTING ROADBEDS 71
SP44. CHANNEL STABILIZATION 71
SP45. DEWATERING 71
SP46. COFFERDAM AND PUMP AROUND 72
SP47. PLANNED QUANTITIES 72

SPECIAL PROVISIONS

SP1. SCOPE OF WORK

The work called for under these specifications, includes the furnishing of all labor, materials, equipment, appurtenances, and means of conveyance for all materials and equipment necessary for the following small structure replacements:

SMALL STRUCTURE # 21037 (BRIDGE # 311) 206TH STREET / FINLEY CREEK WASHINGTON TOWNSHIP
HAMILTON COUNTY,
INDIANA PB-18-0003

All work is to be completed in accordance with these plans and Special Provisions as approved by the ENGINEER.

SP2. STANDARD SPECIFICATIONS

The following Special Provisions are in addition to the Indiana Department of Transportation's Standard Specifications dated 2020. These Special Provisions shall govern over the Standard and Supplemental Specifications.

"Standard Specifications" shall mean the Indiana Department of Transportation Standard Specifications dated 2020, effective for lettings on or after September 1, 2019, together with the most recently published Supplemental Specifications and all applicable Indiana Department of Transportation Standard Drawings, except when conflicting with the Plans or these Special Provisions. Copies of the INDOT Standard Drawings are available on INDOT's Website.

Wherever in the contract documents the Standard Specifications are referenced, it shall be interpreted to mean the 2020 Standard Specifications unless specifically called out otherwise.

SP3. NOTICE TO PROCEED AND CONTRACT SCHEDULE

The schedule for the completion of the work included in this contract including incidentals and clean up, shall be governed on a calendar day basis and constrained by fixed calendar dates.

The OWNER's Notice to Proceed is anticipated to be issued on or after **April 1, 2021**.

The CONTRACTOR shall provide the OWNER at least three weeks' notice prior to closing of the road. The road shall not be closed without prior consent from the OWNER.

The CONTRACTOR shall not close 206th Street earlier than **June 1, 2021**.

The CONTRACTOR shall open 206th Street prior to **September 1, 2021**.

The CONTRACTOR shall have all work completed and ready for acceptance by **September 1, 2021.**

SP4. PREQUALIFIED CONTRACTOR REQUIREMENT

Only proposals from those CONTRACTORS who are registered on the Indiana Department of Transportation's current listing of Prequalified Contractors for item D(A) "Bridges: Highway Over Water" will be considered. Any bids submitted by Contractors not approved for this item on the list will be returned to the bidder unopened.

SP5. PRE-BID MEETING

There will not be a pre-bid meeting for this project.

SP6. PRE-CONSTRUCTION CONFERENCE

Before the CONTRACTOR is issued a Notice to Proceed, a conference attended by the OWNER, ENGINEER, CONTRACTOR and others as appropriate will be held. The purpose of this conference will be to discuss procedures for making submittals, processing applications for payment, and to establish other procedures and understandings bearing upon coordination and performance of the work.

Contractor shall submit the following documents at the Pre-construction Conference:

- Payment Bond as mentioned elsewhere herein
- Performance Bond as mentioned elsewhere herein
- Certification Letter as mentioned elsewhere herein
- Certificate of Insurance as mentioned elsewhere herein
- Specific Mix Design, Certification, and specification of material required to be submitted as mentioned elsewhere herein

CONTRACTOR shall not be allowed to proceed with any work until all the above-mentioned documents are submitted to the ENGINEER. Notice to proceed shall be issued as mentioned elsewhere herein and all work / calendars days shall be counted after issuance of Notice to Proceed. This time frame also includes review and approval of any mix design and certification required as mention elsewhere herein. ENGINEER shall have minimum of 72-hours for review and approval of any mix design submitted.

SP7. COORDINATION

The CONTRACTOR shall provide 2 weeks written notice to the organizations listed below prior to beginning construction of the first GRS abutment wall by email. The CONTRACTOR shall confirm the date one week prior to beginning construction of the first GRS abutment wall by email.

Infrastructure Engineering, Inc.

Nick Bergman
nbergman@infrastructure-eng.com
Dustin Quincy
dquincy@infrastructure-eng.com

Hamilton County Highway Department

Faraz Khan
Faraz.Khan@hamiltoncounty.in.gov

SP8. **VERIFICATION OF WORK**

In addition to the procedure for verification of work performed as described in these Specifications and/or Special Provisions, the Contractor shall lend whatever necessary assistance the ENGINEER may request with respect to verification of work performed.

SP9. **LIQUIDATED DAMAGES**

Damages setout below are not meant to penalize the contractor, but to insure timely completion of this contract. It is the sole responsibility of the CONTRACTOR to thoroughly familiarize himself with these contract documents.

The CONTRACTOR shall pay one thousand dollars ($1,000.00) for each calendar day exceeding the 60 calendar days that 206th Street is allowed to be closed to traffic.

The CONTRACTOR shall pay one thousand dollars ($1,000.00) for each calendar day that 206th Street is closed to traffic on or after September 1, 2021.

The CONTRACTOR shall pay one thousand dollars ($1,000.00) for each calendar day exceeding the 75 calendar days for completion of Bridge 311.

The CONTRACTOR shall pay one thousand dollars ($1,000.00) for each calendar the project is not complete after September 1, 2021.

If the CONTRACTOR exceeds any or all allotted time periods simultaneously, the assessed damages will be cumulative.

SP10. **DECREASED OR INCREASED QUANTITIES OF WORK**

These Special Provisions shall not be considered as a waiver of, nor shall they invalidate the right of the ENGINEER to increase or decrease quantities of work

SP11. **PARTIAL PAYMENTS**

Partial payments will be made once each month as the work progresses. Said payments will be based upon estimates prepared by the CONTRACTOR using the provided HCHD FORM 8049 and a County Claim Voucher and approved by the ENGINEER for the value of the work performed and materials complete in place in accordance with the contract, plans and specification. No partial payment will be made when the amount due the CONTRACTOR since the last estimate amounts to less than Five Hundred Dollars. From the total of the amount determined to be payable on a partial payment, ten percent of such total amount will be deducted and retained by the County until the final completion and acceptance of the work.

SP12. FINAL PAYMENT

When the contract work has been completed in an acceptable manner in accordance with the terms of the contract, the CONTRACTOR will prepare a final estimate for the work and will furnish the ENGINEER with a copy thereof. Before final payment of the contract, the CONTRACTOR shall furnish the provided Affidavit and Waiver of Lien from all subcontractors, material suppliers and equipment suppliers who provided goods and/or services valued at $500.00 or greater. Final payment will not be made until a final inspection has been made and the work has been accepted by the County and has met the requirements of Section 109.08 of the Indiana Department of Transportation Standard Specifications. The ENGINEER, acting for the Board of County Commissioners, will then certify to the County Auditor the balance due the CONTRACTOR, and said certificate will be deemed an acceptance of the completed contract by the OWNER.

SP13. EXISTING CONDITIONS

The CONTRACTOR shall verify the elevation and measurements of all points where new construction is to match existing conditions prior to the commencement of any construction activities.

Where new work is to be filled to old work, the CONTRACTOR shall check all dimensions and condition in the field and report any errors or discrepancies to the ENGINEER or assume responsibility for their correctness and the fit of new parts to old. If such parts do not fit properly, CONTRACTOR shall make at CONTRACTOR'S expense such alternations to new parts as may be necessary to assure proper fits and connection, which meet the approval of the ENGINEER.

The cost of this work will not be paid for directly, but the cost thereof shall be included in the cost of other items.

SP14. "AS BUILT" DRAWINGS

The CONTRACTOR, at no extra cost, shall furnish to the OWNER two complete sets of as-built drawings with all deviations, changes, errors and omissions plainly marked, verified in writing that their drawings are true and accurate.

The as-built drawings shall show the horizontal and vertical locations of each underground utility facilities uncovered during construction. The as-built drawings shall be certified in writing that the drawings are true and accurate.

The cost of this work will not be paid for directly, but the cost thereof shall be included in the cost of other items.

SP15. TESTING OF MATERIALS

The CONTRACTOR shall be responsible for all testing and sampling of materials as hereinafter specified. The CONTRACTOR shall furnish certified tests for the following materials, which are to be made by an independent laboratory approved by the ENGINEER. The independent laboratory shall submit copies of all test results directly to the ENGINEER. Testing performed by an agent of a material producer or supplier will not be considered independent.

The cost of providing samples and testing will not be paid for directly, but the cost thereof shall be included in the cost of other items.

CONCRETE
Advance Concrete Tests: Concrete tests shall be conducted in accordance with A.S.T.M. Serial Des. C-39, for compliance with the requirements of these specifications.

Slump: For each 25 cubic yards or fraction thereof taken from forms.

Compression: The Contractor shall have tests made at a testing laboratory that is approved by the ENGINEER. The Contractor shall furnish to the ENGINEER all equipment and facilities necessary to prepare concrete test specimens. Three test cylinders 6" in diameter and 12" high will be made for each 100 cubic yard of each class of concrete or fraction thereof, placed each day. The Contractor shall properly crate and transport the cylinder test specimens to the approved laboratory.

The minimum compressive strength at 28 days shall be: Class “A” Concrete, 3500 P.S.I., Class “B” Concrete, 3000 P.S.I. Class “C” Concrete, 4000 P.S.I.

One of the three test specimens shall be tested at 7 days and the remaining two specimens shall be tested at 28 days.

Concrete test specifications shall be in accordance with AASHTO Des. T-23; cylinder specimens shall be tested in accordance with ASSHTO T-22, and test beams shall be treated in accordance with AASHTO Des. T-97.

If the Contractor desires to remove forms sooner than as specified in Article 702.13, he shall make 6x6x36 test beams to provide information for stripping forms. Equipment for testing these beams shall be furnished by the Contractor.

BITUMINOUS MATERIAL
The Contractor shall provide proof that all bituminous material used shall be of State tested material and on immediate usage basis. Class D certification required.

BORROW
The CONTRACTOR shall determine the location of the borrow pit and shall have laboratory density tests made as prescribed in Section 203.24 and outlined in AASHTO T-99. The subgrade shall be constructed in accordance with Section 207. No direct payment will be made for subgrade treatment. The cost of all work and testing for subgrade treatment shall be included in other items of the contract. Frequency of the density testing shall be every 100 ft for each lane of pavement per lift. Density testing for shoulder width greater than 6 feet shall be every 300 feet per lift.

FOUNDATION
The CONTRACTOR shall verify soil bearing capacity meets or exceeds the design capacity at each GRS abutment. ENGINEER shall determine the location of each test. The CONTRACTOR shall perform a minimum of ten soil bearing capacity test (five per abutment).

REINFORCING STEEL
The Contractor shall furnish the ENGINEER with two (2) copies of certified mill test reports. Reinforcing steel shall comply with the requirements set out in Article 910.01. Grade 60 steel shall be used.

MODULAR CONCRETE BLOCK

Material properties shall be in accordance with the requirements of 732.05.

Table 1, "Strength and Absorption Requirements", shall be modified to require that the average compressive strength, when sampled and tested in accordance with ASTM C 140, of a three CMU compressive strength sample shall be 4,000 psi with no individual unit less than 3,500 psi. Maximum absorption shall be 6%.

Freeze-thaw durability testing shall be completed in accordance with Section 8.3 by a laboratory approved by the Department. Test results on all mix designs used in the manufacture of modular blocks shall have been completed in accordance with ASTM C 1372. If a change to the mix design, such as proportioning or material source, is desired, the modified mix design shall be retested for freeze-thaw. A type A certification in accordance with 916 for the freeze-thaw durability testing shall be submitted to the ENGINEER prior to use of the blocks.

Sampling and testing of the manufacturer's production lots will be conducted by the CONTRACTOR in accordance with ASTM C 140. If the compressive strength test result does not meet the requirements of 732.05(a), the production lot units may not be used. The manufacturer may resample the same production lot in the presence of the ENGINEER for retesting. The CONTRACTOR will test the additional samples in accordance with ASTM C140. If the retested samples meet the requirements of 732.05(a), the production lot may be used. If the retested samples do not meet the requirements of 732.05(a), all the units from the production lot may not be used.

SP16. UTILITY INFORMATION

All applicable sections for 105.06 and 107.18 shall apply except as amended elsewhere within the contract documents and as follows:

Approved utility work plans are included in Appendix "E".

The utilities are beyond the control of the OWNER. Coordination with any applicable utility(s) is the sole responsibility of the CONTRACTOR. The CONTRACTOR shall identify and contact the affected utilities prior to the commencement of any activities.

The following is provided for **information purposes only**. The CONTRACTOR shall contact the following personnel or company to coordinate work prior to the commencement of any construction activities.

Utility Information	Contact	Telephone
Duke Energy Indiana, Inc	Dan Benson	317-776-5340 (Office) 317-315-4681 (Mobile)
AT&T Indiana	David Smith	765-454-5021 (Office) 765-760-4786 (Mobile)

Duke Energy Indiana and AT&T have utilities that will be relocated within the project limits prior to the Contractor's Notice to Proceed is issued. If the Duke Energy or AT&T utilities are found to still be in conflict or if additional utilities are identified, the Contractor shall be responsible for relocation of utilities. All costs associated with the utility relocation will not be reimbursed.

Additional utility coordination information is included in Appendix "E" **for information only.**

SP17. PERMITS

Copies of all permits obtained by the OWNER are included as a part of the contract documents. According to the requirements of the governing agencies, the authorizations must be conspicuously displayed at the project site and the CONTRACTOR shall perform his work in accordance with the conditions contained in all permits.

HAMILTON COUNTY CROSSING PERMIT

The Hamilton County Surveyors Office has granted Hamilton County Crossing Permits for this work. A copy of each permit is provided in Appendix "B" to these Contract Documents. The Hamilton County Surveyors office is to be notified 48 hours prior to open drain construction at (317) 776-8495. The permit conditions are provided in Appendix "B" to these Contract Documents. Field tile encountered and extending into Finley Creek shall be installed per the Hamilton County Surveyor's Office Standard Drawings, which are in Appendix "F".

401/404 REGIONAL GENERAL PERMITS

The project has been authorized under The United States Army Corps of Engineers section 404 Nationwide Permit (NWP) and Indiana Department of Environmental Management section 401 Water Quality Certification for RGP (WQC). The *Contractor* shall be responsible for following all terms specified in the general and specific conditions of the RGP and WQC during construction. The *Contractor* shall be liable for any fines issued due to violations of the permit conditions. A copy of the permit certification as well as the General and Specific Conditions are provided in the Appendix "B" to these Contract Documents.

INDIANA DNR CONSTRUCTION IN A FLOODWAY

The Indiana Department of Natural Resources (IDNR) has issued a Construction in a Floodway Permit for the Bridge 301 (206th Sreet). The Contractor shall be responsible for following all terms specified in the general and specific conditions of the Floodway Permit during construction. A copy of the permit certification is included in Appendix "B" along with the permit conditions.

The *Contractor* shall post all permits in a conspicuous place on the construction site and

maintain them until the project is completed. The Contractor shall submit the Completion Report Form upon completion of the authorized work.

The Contractor shall be liable for any fines issued due to violations of permit terms and conditions.

The cost of all work necessary to meet requirements of this Special Provision including any additional permit applications or notices that may be required shall be included in the cost of other pay items of the contract. No direct payment will be made for any necessary work to fulfill the requirements of the environmental permits.

Special note shall be taken of the April 1 to June 30 and August 1 to November 15 in- channel work limitations during the fish spawning season listed in the General Conditions. The *Contractor* shall provide the ENGINEER with written waiver from the Indiana Department of Natural resources before any in-channel work will be permitted during these dates.

SP18. RECURRING AND UNIQUIE SPECIAL PROVISIONS

The following INDOT Recurring Special Provisions apply to this contract and are located in Appendix "D":

- 108-C-192d – Storm Water, Erosion, and Sediment Control Inspection Report
- 205-R-706 – Stormwater Management
- 206-R-719 – Dewatering
- 207-R-616 – Subgrade Treatment

The following Unique Special Provision modifies the INDOT Standard Specifications and applies to this contract and is in Appendix "D":

- Subgrade Treatment Type IC, Modified

SP19. RIGHT-OF-WAY

The OWNER has secured the right-of-way.

SP20. CLEARING RIGHT-OF-WAY

Clearing right-of-way shall be in accordance with the requirements of Section 201 except as follows:

The CONTRACTOR shall clear right-of-way to the proposed right-of-way limits unless otherwise noted on the plans or directed by the ENGINEER.

Trees to be cleared shall not be removed in such a way that the roots will be disturbed. Trees requiring clearing shall be cut and ground to 2 feet below proposed grade, leaving root systems undisturbed. The cost of this work will not be paid for directly, but the cost thereof shall be included in the cost of "Clearing Right-of-Way".

SP21. OPEN BURNING OF NATURAL GROWTH

Open burning of natural growth will not be permitted on this contract.

SP22. RESTORATION OF DISTURBED AREAS

Cavities formed by the removal of shrubs, trees and/or stumps and located outside of proposed pavement areas shall be backfilled and compacted with "B" Borrow. Such compaction shall comply with Section 211.04. The top six (6) inches of the backfilled area shall be topsoil in accordance with Section 914.01.

Any roots remaining after all the removal of any designated item shall be removed to a depth of 6 inches below the surface of the surrounding ground area.

The final preparation of these areas shall be in accordance with Section 621.

The cost of this work will not be paid for directly, but the cost thereof shall be included in the cost of other items.

SP23. GEOTECHNICAL INVESTIGATION REPORT

Geotechnical investigation for the site was performed by CTL Engineering, Inc. Indianapolis, Indiana (Phone: 317-295-8650). This report presents the soil evaluation, geotechnical recommendations and construction considerations for this project.

Copies of the reports are provided in Appendix "C" to these Contract Documents. Copies are also available for viewing from the Infrastructure Engineering, Inc. 201 South Capitol Avenue, Suite 490, Indianapolis, IN 46225, nbergman@infrastructure-eng.com.

SP24. PRESENT STRUCTURE, REMOVE

The existing structure shall be removed in its entirety and in accordance with section 202.03 of the Standard Specifications. All materials shall become the property of the CONTRACTOR and be removed from the site and properly disposed, unless otherwise approved by the ENGINEER.

SP25. COMMON EXCAVATION, UNDISTRIBUTED

An undistributed quantity of Common Excavation has been included in the contract to be used for subgrade stabilization if approved by and as directed by the ENGINEER.

The cost of all materials, maintenance, labor, equipment, and necessary incidentals shall be included in the price of "Excavation, Common, Undistributed", CYS, complete in place.

SP26. WET EXCAVATION, UNDISTRIBUTED

An undistributed quantity of Excavation, Wet has been included in the contract to be used to excavate yielding areas below the GRS foundation bearing area if approved by and as directed by the ENGINEER.

The cost of all materials, maintenance, labor, equipment, and necessary incidentals shall be included in the price of "Excavation, Wet, Undistrubuted", CYS, complete in place.

SP27. WATERWAY EXCAVATION, UNDISTRIBUTED

An undistributed quantity of Waterway Excavation has been included in the contract to be used for waterway excavation if approved by and as directed by the ENGINEER.

The cost of all materials, maintenance, labor, equipment, and necessary incidentals shall be included in the price of "Excavation, Waterway, Undistributed", CYS, complete in place.

SP28. STOCKPILE LOCATION

The CONTRACTOR shall not stockpile soil within 10 feet of open excavation for GRS abutment.

SP29. GUARDRAIL POSTS

Guardrail posts shall be installed through GRS geotextile layers where required. Cutting or coring the geotextile shall be performed as shown on the plans or as directed by the ENGINEER. The cost of this work will not be paid for directly, but the cost thereof shall be included in the cost of other items.

SP30. RIPRAP

Riprap shall be placed at the locations shown on the plans around the bridge abutments and channel slopes in accordance with 616 of the Standard Specifications. The estimated quantity of riprap material required for use in the areas indicated on the plans.

The CONTRACTOR shall place the riprap over geotextiles immediately after the slopes have been excavated and graded. The slopes shall not be left bare overnight.

SP31. SEEDING

If the seeding is placed outside the seasonal limitation requirement per INDOT Specification, Warranty Bond shall include all operations necessary for re-installation, including re-installation of erosion control blankets as specified on the plans.

SP32. SEEDING OUTSIDE CONSTRUCTION LIMITS

Area which have been disturbed by construction and are outside the construction limits shall be seeded with seed mixture type R in accordance with 621.06(a).

No payment will be made for seeding required in areas outside the construction limits, which have been disturbed by construction.

SP33. MULCHED SEEDING AND BARE OR THINLY VEGETATED AREAS

No bare or thinly vegetated areas shall be left in such condition for more than 15 calendar or are exposed for more than 15 days then they shall be covered by Temporary Seed Mixture and

Temporary Mulch.

This work shall be performed in accordance with 621 of the INDOT Standard Specifications.

Method of Measurement and Basis of Payment shall be as prescribed in 621 of the INDOT Standard Specifications.

SP34. TS-1 RAIL AND GUARDRAIL TRANSITION TGS-1

This work shall consist of supplying and installing all necessary rail panels, posts, concrete anchors, and hardware for the fabrication and installation of the Railing, Steel TS-1 and Guardrail Transition, TGS-1 shall be in accordance with the plans.

Payment for the "Railing, Steel, TS-1" will be made at the contract unit price per Linear Foot and payment for the "Guardrail Transition, Type TGS-1 Modified" will be made at the contract unit price per each.

SP35. PROTECTION OF FIELD TILE

This item shall include all labor, equipment, and materials necessary to remove and replace or extend any field tiles that may be uncovered during the Work, in accordance with 715 and 719. Field tiles encountered and affected by the scope of work specified within the contract documents, if any, shall be given a positive outlet.

The following undistributed pay items shall apply to this work and shall be used for all field tiles up to and including 15 inches in diameter that are uncovered during the construction operations.

Pay Item	**Unit**
Pipe, Field Tile, 6 in, Undistributed	LFT
Pipe, Field Tile, 8 in, Undistributed	LFT
Pipe, Field Tile, 10 in, Undistributed	LFT
Pipe, Field Tile, 12 in, Undistributed	LFT
Pipe, Field Tile, 15 in, Undistributed	LFT

The accepted quantities of "Pipe, Field Tile, XX in, Undistributed" will be paid for at the contract unit price per linear foot, complete in place.

SP36. ANIMAL GUARD IN FIELD TILES

An animal guard shall be placed in accordance with the Hamilton County Surveyor's Office Standard Plan "O-2". Additionally, the last twenty feet (20') of pipe shall be corrugated metal as shown on the Hamilton County Surveyor's Office Standard Plan "O-1". See Appendix "F" of these Contract Documents for a copy of the HCSO Standard Plan drawings. The cost of this work will not be paid for directly, but the cost thereof shall be included in the cost of "Pipe, Field Tile" pay items.

SP37. SURFACE SEALING

Surfaces to be sealed shall include the entire concrete structure that is to be thoroughly cleaned

of all foreign materials by sandblasting or other INDOT approved method just prior to sealing. Surface Seal shall not take place until the OWNER or the ENGINEER have inspected the area and have approved of it. Concrete Sealer shall not be applied in any of the following weather conditions:

- Rain
- If rain is anticipated within 48 hour after application
- Temperature is below the manufacturer recommendation.

All labor, material, equipment, and supervision required to complete this work shall be included in the pay item identified as "Surface Seal", lump sum.

SP38. MODULAR CONCRETE BLOCK RETAINING WALL

Description
This work shall consist of design as required, furnishing materials, and placement of modular block wall units in accordance with 105.03. Additional information and construction guidelines are available **for information only** in FHWA publication FHWA-HRT-11-026 (June 2012): http://www.fhwa.dot.gov/publications/research/infrastructure/structures/11026/11026.pdf

General Design Requirements

The top of the modular block wall shall be designed to prevent the removal of the top course of blocks.

If the wall system provider needs additional information, the CONTRACTOR shall be responsible for obtaining such information.

The modular block wall layout shall follow the general dimensions of the wall envelope shown on the plans.

Cast-in-place concrete will not be an acceptable replacement for modular block wall unit areas indicated by the wall envelope.

Only one typical modular block face finish shall be used at a bridge site.

Design Criteria
The maximum modular block wall unit face area shall be 1 sq ft.

Submittals
The CONTRACTOR shall submit working drawings in accordance with 105.02. Wall construction operations shall not begin until the CONTRACTOR receives written notice that the working drawings are approved.

(a) The working drawings shall include all details, dimensions, quantities, cross-sections, and general notes necessary to construct the wall and shall include, but shall not be limited to the following:

1. Plan and elevation sheets showing views which detail the placing position.

2. Plan sheets of the wall that indicate the offsets from the construction centerline to the face of the wall at all changes in horizontal alignment.

3. Elevation views of the wall which shall include the following:
   a. elevations at the top of the wall at all horizontal and vertical break points at least every 50 ft along the face of the wall,

   b. the designation as to the type of modular block wall unit,

   c. an indication of the original and final ground lines and maximum factored bearing resistance, if applicable.

(b) All modular block wall units shall show all dimensions necessary to construct the element and the location of soil reinforcing system devices embedded in the units.

(c) The details for construction of walls around drainage facilities and the outletting of internal drainage from the modular block wall volume.

(d) All details of the architectural treatment.

MATERIALS

Materials
Materials shall be in accordance with the following:

Admixtures for Concrete*	912.03
Air Cooled Blast Furnace Slag	901.09
B Borrow	211.02
Coarse Aggregate, Class A or Higher, Size No. 91	904
Coarse Aggregate, Class D or Higher, Size No. 8	904
Concrete	702
Fine Aggregate, Size No. 23	904
Fly Ash	901.02
Geogrid, Type III	918.05
Portland Cement	901.01(b)
Structure Backfill	211.03.1
Water	913.01

* Admixtures in accordance with ASTM C 1372 may be used for the modular block if approved by the ENGINEER.

Geotextile shall be Mirafi HP570 or approved equivalent. See Appendix “G” for product data sheet.

(a) Concrete Modular Block Wall Units
Concrete modular block retaining wall units shall be in accordance with ASTM C 1372, except for the modifications below, and shall have a minimum compressive strength of 4,000 psi at 28 days. Modular block wall units consisting of type I or II cement will be considered acceptable

for placement in the wall when 7-day strengths exceed 3,500 psi. The modular block wall unit's compressive strength shall be considered acceptable regardless of curing age when compressive test results indicate that the compressive strength is in accordance with the requirements stated above.

Retarding agents, accelerating agents, coloring pigments, or additives containing chloride shall not be used without approval.

If red color is specified, the color additive shall be mixed into the concrete per the manufacturer's recommendations to produce a modular block that is red in appearance. The CONTRACTOR shall submit a sample of the proposed color to the OWNER for approval a minimum of two weeks prior to fabrication.

The foam plug shall be expanded polystyrene filler or equivalent, having a compressive strength greater than or equal to 10 pounds per square inch.

2. Rejection

Units shall be subject to rejection due to failure to be in accordance with the requirements specified above. In addition, the following defects may be sufficient cause for rejection.

a. Defects which indicate imperfect molding.

b. Defects which indicate honeycombed or open texture concrete.

c. Defects in the physical characteristics of the concrete, such as broken or chipped concrete, or color variations, or dunnage marks on the front face due to excessive form oil or other reasons.

d. The height of each individual block shall be within 1/16 inches of its standard dimension.

e. The length and width of each individual block shall be within 1/8 inches of its standard dimension.

f. Hollow units shall have a minimum face shall thickness of 1.25 inches and a web thickness of ¾ inches.

The ENGINEER will determine whether spalled, honeycombed, chipped, or otherwise defective concrete shall be repaired or be cause for rejection. Repair of concrete, if permitted, shall be completed in a satisfactory manner. Repair to concrete surfaces, which are to be exposed to view after completion of construction shall be subject to approval.

3. Marking

The date of manufacture, the production lot number, and the place mark shall be clearly scribed on the rear face of each unit or on each shipping pallet.

4. Handling, Storage, and Shipping

All modular block wall units shall be handled, stored, and shipped so as to eliminate the danger of chipping, cracks, fractures, and excessive bending stresses.

CONSTRUCTION REQUIREMENTS

General Requirements

The wall supplier representative shall provide technical instruction, guidance in preconstruction activities including the preconstruction conference, and on-site technical assistance to the CONTRACTOR during construction.

Foundation Preparation

The foundation for the modular block wall shall be graded level for the width shown on the plans. Foundation preparation shall otherwise be in accordance with 731.07.

Retaining Wall Excavation

Excavation shall be in accordance with 731.08.

Wall Erection

Modular block wall units shall be stored to minimize contact with the ground or being covered by standing water. Modular block wall units having face discoloration shall not be used.

The CONTRACTOR shall perform the necessary work to verify that the foundation is at the correct elevation, that the wall is constructed to the correct alignment, and that the work is in accordance with the specified tolerances. Modular block wall units shall be placed in successive horizontal lifts in the sequence shown on the plans as backfill placement proceeds. As backfill material is placed behind the units, the units shall be maintained in vertical position. Horizontal alignment tolerances shall not exceed 3/4 in. when measured with a 10 ft straightedge. Vertical alignment tolerances shall not exceed ¼ in. over three layers of modular block units.

Alignment shall be checked at each layer of modular block wall units after the backfill behind the modular block wall units has been compacted, and the results shall be recorded. Checking of alignments and tolerances shall include verifying that the modular block wall units are plumb over the entire height of the wall.

The top of the bottom layer of modular block units shall have a maximum alignment tolerance of 1/8 in. when measured with a 10-foot straightedge along the length of the wall.

Each modular block layer and corresponding aggregate layer shall be completely constructed prior to installing the next layer of geotextile reinforcement and modular block unit. Each modular block layer shall be cleaned of any debris and fill material prior to installing the next layer of geotextile reinforcement and modular block unit.

A stretcher or running bond shall be maintained between courses of blocks to ensure that joints between blocks are offset with each row.

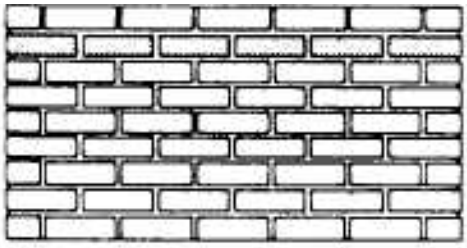

RUNNING

Geotextile reinforcement shall be placed normal to the face of the wall, unless otherwise shown on the plans and shall be constructed in accordance with 214.04.

Geotextile reinforcement shall extend between the layers of the modular block wall and cover 85 percent of the top surface of the modular block wall. Excess reinforcement showing through the face of the wall shall be removed in accordance with the manufacturer's recommendation.

Geotextile reinforcement shall be installed so that the strongest direction (i.e. cross machine direction) is perpendicular to abutment facing and shall cover 100 percent of the embedment area per layer unless otherwise shown in the drawings.

Adjacent sections of geotextile reinforcement do not need to be overlapped except when exposed in the wrap-around face system. The reinforcement in wrap-around face system shall be overlapped or mechanically connected per the manufacturer's recommendation.

Geotextile reinforcement shall be installed taut and free of wrinkles.

Backfill Placement

Backfill placement shall follow erection of each course of modular block wall units. All sheeting and bracing shall be removed as the backfilling progresses. Backfill shall be placed so as to avoid damage or disturbance to the wall materials or misalignment of the modular block wall units. All material for backfill shall be subject to approval and shall be free from large or frozen lumps, wood, or other undesirable material. Wall materials that become damaged or disturbed during backfill placement shall be removed and replaced or corrected as directed. All misalignment or distortion of the modular block wall units due to placement of backfill outside the limits described herein shall be corrected as directed.

The work shall also include backfilling beyond the theoretical length of the geotextile in accordance with the details shown on the plans and the disposal of surplus of unsuitable excavated materials as permitted.

Six inches of backfill shall be installed over the geotextile reinforcement prior to operating a vehicle over it.

Backfill shall be installed in 8-inch compacted lifts or compacted lifts equal to the height of a unit or compacted lifts equal to the distance between geotextile reinforcement, whichever is less. Backfill placement and compaction shall otherwise be in accordance with 731.11. Each layer shall be compacted with a minimum of four passes per left and until there is no visible evidence

of further compression of the aggregate layer.

Within three feet of the front of the wall faces, approved hand-operated compaction equipment, such as lightweight mechanical tampers, plates, or rollers shall be used. The aggregate fill behind the modular block units shall be compacted by rodding it every foot.

The top five feet of the abutment backfill shall be compacted to 100 percent of the maximum dry density in accordance with AASHTO T-99-10

At the end of a day's operations, the last lift of backfill shall be sloped away from the wall face to direct surface runoff away from the wall. Surface runoff from adjacent areas shall not be allowed to enter the wall construction area. Any damage, including but not limited to aggregate washouts and soil fines filling the voids in the aggregate, caused by the CONTRACTOR's negligence to redirect surface water away from the construction area or to protect the area from flooding will be repaired at the CONTRACTOR's expense. Repair shall include, but not limited to, replacing the last laid layer of aggregate if the voids in an already installed aggregate layer were infiltrated by fine soil, as directed by the ENGINEER.

Method of Measurement

The measurement of concrete modular block wall units with or without geotextile and wall erection will be based on the square foot area contained within the neat line limits of the wall envelope shown on the plans and not that of the wall system supplier.

Foundation excavation will be measured by the cubic yard in accordance with 203.27(a) to the neat lines shown on the plans. Unsuitable foundation materials, if found, will be measured in accordance with 211.09. Coarse aggregate No. 8 will be measured by the TON based on the theoretical volume, calculated at 2 TON/CYD, to the neat lines as shown on the plans. Drainage of the backfill including piping and geotextile materials used in the drainage system will not be measured.

Stockpiled Modular Block Units

Partial payment may be made for block wall units stockpiled on the project site or at the CONTRACTOR's approved storage location. Partial payment will include the delivered cost of the units, as verified by invoices that include freight charges. The CONTRACTOR shall furnish the invoices. The partial payment will not exceed 75% of the contract unit price for modular block wall with. Prior to authorizing partial payment, the ENGINEER will verify that the units are in accordance with 732.05(a).

Basis of Payment

The accepted quantities of modular block wall units will be paid for at the contract unit price per square foot. Erection of modular block wall units will be paid for by the square foot. Foundation excavation will be paid for in accordance with 203.28. Structure backfill and B borrow will be paid for in accordance with 211.10. Unsuitable foundation materials will be paid for in accordance with 211.10. The accepted quantities of geotextile, Mirafi (or equal) will be paid for at the contract unit price per square yard, complete in place. The accepted quantities of coarse aggregate No. 8 will be paid for as aggregate for drainage fill at the contract unit price per cubic yard, complete in place.

Payment will be made under:

Pay Item	Unit Symbol
Coarse Aggregate, No. 8	TON
Modular Block Wall Erection	SFT
Modular Block Wall, Split Face	SFT
Modular Block Wall, Solid, Red	SFT
Geotextile, Mirafi (or equal)	SYS

The cost of the wall system, services including the testing laboratory, certified testing personnel, and the testing and inspection of modular block wall units shall be included in the cost of the pay items of this section.

The cost of materials, cutting or altering the geotextile and units at the site, concrete color additive, repair or replacement of units damaged or removed due to backfill placement, compressive-strength retesting if required, retesting or replacing failed block units, and incidentals shall be included in the cost of the pay items of this section.

The cost of all labor and materials required for preparing the wall foundation, coarse aggregate No. 8 placed outside the neat lines as shown on the plans, replacement materials damaged during backfill placement if required, and erecting the modular block units shall be included in the cost of wall erection.

The cost of all labor and materials required to install the polystyrene, filler material, redirect surface runoff, reinforcing bars and concrete in the top layers of the modular blocks shall be included in the cost of other pay items.

SP39. ROAD CLOSURE SIGN ASSEMBLY

This work shall consist of installation of Road Closure Sign Assembly shall be used with Type B Barricades and Type A Warning Lights, as indicated in the detail drawing and in accordance with Section 801.06, 801.07, and 801.14 of the Standard Specification.

All labor, material, equipment, maintenance, and supervision required to complete this work shall be included in the pay item identified as “Road Closure Sign Assembly”, EACH.

SP40. DETOUR ROUTE MARKER ASSEMBLY

This work shall consist of installation of Detour Route Marker Assembly, as indicated in the detail drawing, and in accordance with Section 801.05 of the Standard Specification.

CONTRACTOR shall be required to post signs as indicated by the plans or as directed by the ENGINEER. All labor, material, equipment, maintenance, and supervision required to complete this work shall be included in the pay item identified as “Detour Route Marker Assembly”, EACH.

SP41. DISPOSAL OF EXCESS MATERIAL

All excess material not to be salvaged (waste) shall be removed from the project site. Whether a private or public waste site is utilized, such disposal shall comply with all Federal, State and local ordinances

and permit requirements.

No direct payment will be made for this work but the cost thereof shall be included in the costs of the other items of the contract.

SP42. DELETION OF WORK

The OWNER/ENGINEER has the right to delete any items that are a part of this contract.

SP43. EMBANKMENT OVER EXISTING ROADBEDS

Placement of new embankment over the existing roadbed shall not be permitted. The existing pavement shall be removed entirely, or milled full-depth, spread and re-compacted prior to any fill being placed in the roadbed. The cost of removal of the existing pavement is included in the pay item "Excavation, Common" regardless of the pavement type.

SP44. CHANNEL STABILIZATION

Channel stabilization shall include all work associated with excavating, shaping, and stabilizing the stream channel.

The channel shall be excavated to the limits shown on the plans. The channel stabilization shall include the installation of riprap over geotextiles in the stream and channel revegetation seeding along the bank in accordance with the plans.

The seed bed shall be prepared in accordance with 621.03 and 621.04 of the Standard Specifications. The "Grasses and Sedges" and "Forbes" table in the plan set provide the mix ratio and types of seeds that shall be included with this seed mix. The application rate of 205 lbs/acres shall be used. The method of planting shall be by means of hydroseeding or by means of a hand method with a minimal amount of mulch applied in a separate operation. Fertilizer shall not be added to this seed mixture.

The erosion control blanket (Manufactured Surface Protection Product) shall be in accordance with 205.04 of the Standard Specifications. The erosion control blanket will not be measured and the cost of all work and materials associated with the installation of the erosion control blanket shall be included in the cost of items within this special provision.

All labor, material, equipment, maintenance, and supervision required to complete this work shall be included in the pay items identified as:

Pay Item	**Unit Symbol**
Channel Revegetation Seed Mix	SYS
Riprap, Revetment	TON
Geotextiles for Riprap, Type 3	SYS
Excavation, Waterway	CYS

SP45. DEWATERING

The Contractor's attention is directed to the possibility that dewatering may be required during construction of the proposed bridge construction. No additional payment will be made for dewatering (if required), but the cost shall be included in other items.

SP46. COFFERDAM AND PUMP AROUND

The Contractor's attention is directed to the possibility that a cofferdam and pump around may be necessary during construction of the proposed bridge construction. If a cofferdam and pump around is needed, the Contractor will be responsible designing, constructing, maintaining and removal of the cofferdam and pump around.

All work shall meet the requirements of all applicable permits. Amendments to the Indiana Department of Natural Resources Construction in a Floodway permit and Indiana Department of Environmental Management Rule 5 permits may be required.

No additional payment will be made for amending the permits, Cofferdam and Pump Around (if required), but the cost shall be included in other items.

SP47. PLANNED QUANTITIES

The pay items listed below will not be measured for payment. These pay items will be paid at Planned Quantity as shown in the Itemized Proposal per the contract unit price per pay item.

Item No.	Description	Unit
*5	EXCAVATION, COMMON	CYS
*7	BORROW	CYS
*8	EXCAVATION, WATERWAY	CYS
*12	EXCAVATION, WET	CYS
*14	SUBGRADE TREATMENT, TYPE II	CYS
*15	SUBGRADE TREATMENT, TYPE IC MODIFIED	SYS
*19	HIGH STRENGTH GEOTEXTILE, MIRAFI	SYS
*20	COMPACTED AGGREGATE NO. 8	CYS
*58	MODULAR BLOCK WALL (SPILT FACE)	SFT
*59	MODULAR BLOCK WALL (SOILD)	SFT
*60	MODULAR BLOCK WALL ERECTION	SFT

APPENDIX A

SMALL STRUCTURE # 21037 (BRIDGE # 311)
206TH STREET / FINLEY CREEK

PAGE INTENTIONALLY LEFT BLANK

CONTRACTOR'S BID FOR PUBLIC WORK - FORM 96

State Form 52414 (R2 / 2-13) / Form 96 (Revised 2013)
Prescribed by State Board of Accounts

PART I
(To be completed for all bids. Please type or print)

Date *(month, day, year):*_____

1. Governmental Unit (Owner):_____
2. County :_____
3. Bidder (Firm):_____

   Address:_____

   City/State/ZIPcode:_____
4. Telephone Number:_____
5. Agent of Bidder *(if applicable):*_____

Pursuant to notices given, the undersigned offers to furnish labor and/or material necessary to complete the public works project of _____ (Governmental Unit) in accordance with plans and specifications prepared by _____ _____ and dated _____ for the sum of _____ $_____

The undersigned further agrees to furnish a bond or certified check with this bid for an amount specified in the notice of the letting. If alternative bids apply, the undersigned submits a proposal for each in accordance with the notice. Any addendums attached will be specifically referenced at the applicable page.

If additional units of material included in the contract are needed, the cost of units must be the same as that shown in the original contract if accepted by the governmental unit. If the bid is to be awarded on a unit basis, the itemization of the units shall be shown on a separate attachment.

The contractor and his subcontractors, if any, shall not discriminate against or intimidate any employee, or applicant for employment, to be employed in the performance of this contract, with respect to any matter directly or indirectly related to employment because of race, religion, color, sex, national origin or ancestry. Breach of this covenant may be regarded as a material breach of the contract.

CERTIFICATION OF USE OF UNITED STATES STEEL PRODUCTS
(If applicable)

I, the undersigned bidder or agent as a contractor on a public works project, understand my statutory obligation to use steel products made in the United States (I.C. 5-16-8-2). I hereby certify that I and all subcontractors employed by me for this project will use U.S. steel products on this project if awarded. I understand that violations hereunder may result in forfeiture of contractual payments.

ACCEPTANCE

The above bid is accepted this _____ day of _____, _____, subject to the following conditions: _____

_____

Contracting Authority Members:

_____ _____

_____ _____

_____ _____

PART II

(For projects of $150,000 or more – IC 36-1-12-4)

Governmental Unit: _____

Bidder (Firm) _____

Date *(month, day, year):* _____

These statements to be submitted under oath by each bidder with and as a part of his bid. Attach additional pages for each section as needed.

SECTION I EXPERIENCE QUESTIONNAIRE

1. What public works projects has your organization completed for the period of one (1) year prior to the date of the current bid?

Contract Amount	Class of Work	Completion Date	Name and Address of Owner

2. What public works projects are now in process of construction by your organization?

Contract Amount	Class of Work	Expected Completion Date	Name and Address of Owner

3. Have you ever failed to complete any work awarded to you? _____ If so, where and why?

_____

_____

_____

4. List references from private firms for which you have performed work.

_____

_____

_____

_____

_____

SECTION II PLAN AND EQUIPMENT QUESTIONNAIRE

1. Explain your plan or layout for performing proposed work. *(Examples could include a narrative of when you could begin work, complete the project, number of workers, etc. and any other information which you believe would enable the governmental unit to consider your bid.)*

_____

_____

_____

_____

_____

2. Please list the names and addresses of all subcontractors *(i.e. persons or firms outside your own firm who have performed part of the work)* that you have used on public works projects during the past five (5) years along with a brief description of the work done by each subcontractor.

_____

_____

_____

_____

_____

3. If you intend to sublet any portion of the work, state the name and address of each subcontractor, equipment to be used by the subcontractor, and whether you will require a bond. However, if you are unable to currently provide a listing, please understand a listing must be provided prior to contract approval. Until the completion of the proposed project, you are under a continuing obligation to immediately notify the governmental unit in the event that you subsequently determine that you will use a subcontractor on the proposed project.

_____

_____

_____

_____

_____

4. What equipment do you have available to use for the proposed project? Any equipment to be used by subcontractors may also be required to be listed by the governmental unit.

_____

_____

_____

_____

_____

5. Have you entered into contracts or received offers for all materials which substantiate the prices used in preparing your proposal? If not, please explain the rationale used which would corroborate the prices listed.

_____

_____

_____

_____

_____

SECTION III CONTRACTOR'S FINANCIAL STATEMENT

Attachment of bidder's financial statement is mandatory. Any bid submitted without said financial statement as required by statute shall thereby be rendered invalid. The financial statement provided hereunder to the governing body awarding the contract must be specific enough in detail so that said governing body can make a proper determination of the bidder's capability for completing the project if awarded.

SECTION IV CONTRACTOR'S NON – COLLUSION AFFIDAVIT

The undersigned bidder or agent, being duly sworn on oath, says that he has not, nor has any other member, representative, or agent of the firm, company, corporation or partnership represented by him, entered into any combination, collusion or agreement with any person relative to the price to be bid by anyone at such letting nor to prevent any person from bidding nor to include anyone to refrain from bidding, and that this bid is made without reference to any other bid and without any agreement, understanding or combination with any other person in reference to such bidding.

He further says that no person or persons, firms, or corporation has, have or will receive directly or indirectly, any rebate, fee, gift, commission or thing of value on account of such sale.

SECTION V OATH AND AFFIRMATION

I HEREBY AFFIRM UNDER THE PENALTIES FOR PERJURY THAT THE FACTS AND INFORMATION CONTAINED IN THE FOREGOING BID FOR PUBLIC WORKS ARE TRUE AND CORRECT.

Dated at _____ this _____ day of _____, _____

_____
(Name of Organization)

By_____

_____
(Title of Person Signing)

ACKNOWLEDGEMENT

STATE OF _____)
) ss
COUNTY OF_____)

Before me, a Notary Public, personally appeared the above-named _____ and

swore that the statements contained in the foregoing document are true and correct.

Subscribed and sworn to before me this _____ day of _____, _____.

_____
Notary Public

My Commission Expires:_____

County of Residence:_____

Part of State Form 52414 (R2 / 2-13) / Form 96 (Revised 2013)

BID OF

_____
(Contractor)

_____
(Address)

_____

FOR

PUBLIC WORKS PROJECTS

OF

_____

_____

_____

Filed _____, _____

Action taken _____

_____

APPENDIX B

SMALL STRUCTURE # 21037 (BRIDGE # 311)
206TH STREET / FINLEY CREEK

PAGE INTENTIONALLY LEFT BLANK

State of Indiana
Department of Natural Resources

CERTIFICATE OF APPROVAL

Application #: FW-29962-0

This Certificate of Approval is a Permit for Construction under the authority of the Indiana Flood Control Act, IC 14-28-1 with 312 IAC 10 as administered by the Department of Natural Resources.

Approval Issued To: Hamilton County Highway Department, Faraz Khan, 1700 South 10th Street, Noblesville, IN 46060

Approval Issued By: **Mail Date:** 3/9/2020

James J. Hebenstreit, PE, Division of Water

Permit Effective Date: 03/27/2020 **Permit Expiration Date: 03/09/2022**

Pursuant to 312 IAC 2-5-1, this Permit becomes Effective eighteen (18) days from the Mail Date to provide a stay period for a Petition for Administrative Review with the Indiana Natural Resources Commission, Division of Hearings. Initiating construction authorized in this Permit prior to the Permit Effective Date constitutes a violation. This Permit is only valid until the Permit Expiration Date.
This Permit may be renewed one (1) time if a written request is received at the DNR, Division of Water, prior to the Permit Expiration Date.

PROJECT INFORMATION:

Waterbody: Finley Creek County: Hamilton

Project Description Narrative: The existing twin corrugated metal culvert structure will be completely removed and replaced with a new single-span bridge. The new bridge will have a clear span length of 40' and an out-to-out length of 42.5' with a clear roadway width of 32.5'. The vertical abutments will be protected with revetment riprap placed approximately 1.5' deep over an area measuring approximately 34' wide by 80' long. The new low chord will be raised by approximately 4.03' over the existing low chord and the bridge deck will be raised approximately 3'. Abutments will be skewed to align with the streamflow. Three 24" diameter culverts will also be installed west of the crossing. The stream bed will be dredged 3' below the existing flowline between the right of way limits.

Project Location: At the 206th Street crossing near Sheridan

PERMIT CONDITIONS:

This Certificate of Approval is valid only if the construction project is in compliance with all Conditions in this Permit.

DNR PROJECT SPECIFIC PERMIT CONDITIONS

1) Do not place riprap or other streambed stabilization materials in the active stream channel above the existing streambed or flowline elevation in order to prevent obstructions to the movement of aquatic organisms upstream and downstream of the crossing structure.
2) Revegetate all bare and disturbed areas that will not be mowed and maintained with a mixture of grasses, sedges, and wildflowers native to Central Indiana and specifically for stream bank/floodway stabilization purposes as soon as possible upon completion; turf-type grasses (including low-endophyte, friendly endophyte, and endophyte free tall fescue but excluding all other varieties of tall fescue) may be used in regularly mowed areas only.
3) Minimize and contain within the project limits inchannel disturbance and the clearing of trees and brush.
4) Do not work in the waterway from April 1 through June 30 without the prior written approval of the Division of Fish and Wildlife.
5) Do not cut any trees suitable for Indiana bat or Northern Long-eared bat roosting (greater than 5 inches dbh, living or dead, with loose hanging bark, or with cracks, crevices, or cavities) from April 1 through September 30.
6) Use minimum average 6 inch graded riprap stone extended below the normal water level to provide habitat for aquatic organisms in the voids.
7) Do not use broken concrete as riprap.
8) Underlay the riprap with a bedding layer of well graded aggregate or a geotextile to prevent piping of soil underneath the riprap.
9) Minimize the movement of resuspended bottom sediment from the immediate project area.
10) Do not deposit or allow construction/demolition materials or debris to fall or otherwise enter the waterway.
11) Appropriately designed measures for controlling erosion and sediment must be implemented to prevent sediment from entering the stream or leaving the construction site; maintain these measures until construction is complete and all disturbed areas are stabilized.
12) Seed and protect all disturbed streambanks and slopes not protected by other methods that are 3:1 or steeper with erosion control blankets that are heavy-duty, biodegradable, and net free or that use loose-woven / Leno-woven netting to minimize the entrapment and snaring of small-bodied wildlife such as snakes and turtles (follow manufacturer's recommendations for selection and installation); seed and apply mulch on all other disturbed areas.
13) Except for the material used as backfill as shown on the plans submitted for the permit application, place all excavated material landward of the floodway*.
14) All work must conform with the existing bank at the upstream and downstream limits of the project site.
15) Do not leave felled trees, brush, or other debris in the floodway*.
16) All riprap placed for bank stabilization must conform to the bank.
17) Upon completion of the project, remove all construction debris from the floodway*.
18) Anchor the bridge deck to prevent dislodging and/or flotation during high water events.
19) Size and/or anchor the riprap to resist displacement by current or wave action.
20) Issuance of this Certificate of Approval does not constitute approval of any temporary causeways, coffer dams, runarounds, access bridges or borrow areas associated with the proposed bridge construction. A separate written approval must be obtained from the DNR, Division of Water for these types of projects prior to beginning any work within the floodway*.
21) Keep all bridge and culvert waterway openings within the scope of this project free of debris and sediment at all times.
22) Approval of this project is contingent on the applicant and all future property owners maintaining the proposed excavated area along the crossing as shown on the plans prepared by Infrastructure engineering and received by the Division of Water on November 27th, 2019 in the same shape and grade in perpetuity.
23) * Note: For regulatory purposes, the floodway is defined on the attached Floodway Map.

DNR PROJECT GENERAL PERMIT CONDITIONS

1) Any modifications or additional construction beyond what was shown on plans received at the Division of Water shall require an additional review and approval from the Department of Natural Resources.

2) This Permit must be posted and maintained at the project site until the project is completed

3) This Permit shall not be assigned or transferred without the prior written approval of the Department of Natural Resources.

4) If any prehistoric or historic archaeological artifacts or human remains are uncovered during construction, demolition, or earthmoving activities, state law (Indiana Code 14-21-1-27 and 29) requires that the discovery must be reported to the Department of Natural Resources within two (2) business days.

5) This Permit may be revoked by the Department of Natural Resources for violation of any condition or applicable statute or rule.

6) The Department of Natural Resources shall have the right to enter upon the site of the permitted activity for the purpose of inspecting the work authorized under this Permit.

Certificate of Approval Attachments: FloodplainMap.pdf

RIGHT TO ADMINISTRATIVE REVIEW:

A party may appeal this Department of Natural Resources Action through the administrative review procedures found in the Administrative Orders and Procedures Act, IC 4-21.5, and the rules promulgated thereunder 312 IAC 3-1. If an appeal is filed, the final agency determination will be made by the Natural Resources Commission following a legal proceeding conducted before an Administrative Law Judge. The Department of Natural Resources will be represented by legal counsel at all stages of administrative review.

In order to obtain an administrative review, a written petition must be filed with the Division of Hearings within 18 days of the Mail Date of the Action. The petition must contain specific reasons for the appeal and indicate the portion or portions of the project to which the appeal pertains. The petition must be addressed to the Division of Hearings, Indiana Government Center North, Room N103, 100 North Senate Avenue, Indianapolis, Indiana 46204

SERVICE LIST:

Applicant(s):
Hamilton County Highway Department, Faraz Khan, 1700 South 10th Street, Noblesville, IN 46060

Agent(s):
Infrastructure Engineering, Inc., Nick Bergman, 201 South Capitol Avenue, Suite 490, Indianapolis, IN 46225

Adjacent Landowners and Interested Parties:
Carey and Sons Inc, 20412 Six Points Road, Sheridan, IN 46069
Richard and Janet Macy, 20575 Cenntennial Road, Sheridan, IN 46069
Kimberly Logan, 2727 West 206th Street, Sheridan, IN 46069
Larry and Karen Durnil, 1325 Chestnut Street, Columbus, IN 47201
Daniel Cain, 2607 West 206th Street, Sheridan, IN 46069
Joshua and Carmen Frazier, 10683 Hoosier Road, Fishers, IN 46037
Dale McMichael, 2525 West 206th Street, Sheridan, IN 46069
Randall and Shaa Fuller, 2505 West 206th Street, Sheridan, IN 46069
Marvin and Doris Bond, 2441 West 206th Street, Sheridan, IN 46069
Dennis and Laura Martz, 20950 Lamong Raod, Sheridan, IN 46069
James DiGiacomo, 3106 West 206th Street, Sheridan, IN 46069
Stuart Neal, 15725 Spring Mill Road, Westfield, IN 46074
Wilma Neal Cox Trust, PO Box 246, Darlington, IN 47940
Nicholas Schooley, 2550 West 206th Street, Sheridan, IN 46069

Dauby Family Trust, 2504 West 206th Street, Sheridan, IN 46069
James and Michelle Sexton, 2448 West 206th Street, Sheridan, IN 46069
Christ Community Church of Lamong Inc, 20854 Lamong Road, Sheridan, IN 46069
Jeffrey and Amanda Young, 2414 West 206th Street, Sheridan, IN 46069

Courtesy Notification:
US Army Corps of Engineers, Louisville District PO Box 59, Louisville, KY 40201
Hamilton County SWCD, Mark McCauley, 1717 Pleasant Street, Suite 100, Noblesville, IN 46060
Chuck Kiphart, One Hamilton County Square, Suite 306, Noblesville, IN 46060
Hamilton County Drainage Board, 1 Hamilton County Square, Suite 188, Noblesville, IN 46060
Indiana Department of Natural Resources, Division of Law Enforcement District 4 Headquarters 3734 Mounds Road, Anderson, IN 46017

ADDITIONAL PERMITTING AGENCIES:

This is not a waiver of any local ordinance or other state or federal law and does not relieve the permittee of any liability for the effects which the project may have upon the safety of the life or property of others.

This does not relieve the permittee of the responsibility of obtaining permits, approvals, easements, etc. under other regulatory programs administered by, but not limited to, the U.S. Army Corps of Engineers, County Drainage Board, Indiana Department of Environmental Management and local, city, or county floodplain management, planning or zoning commissions.

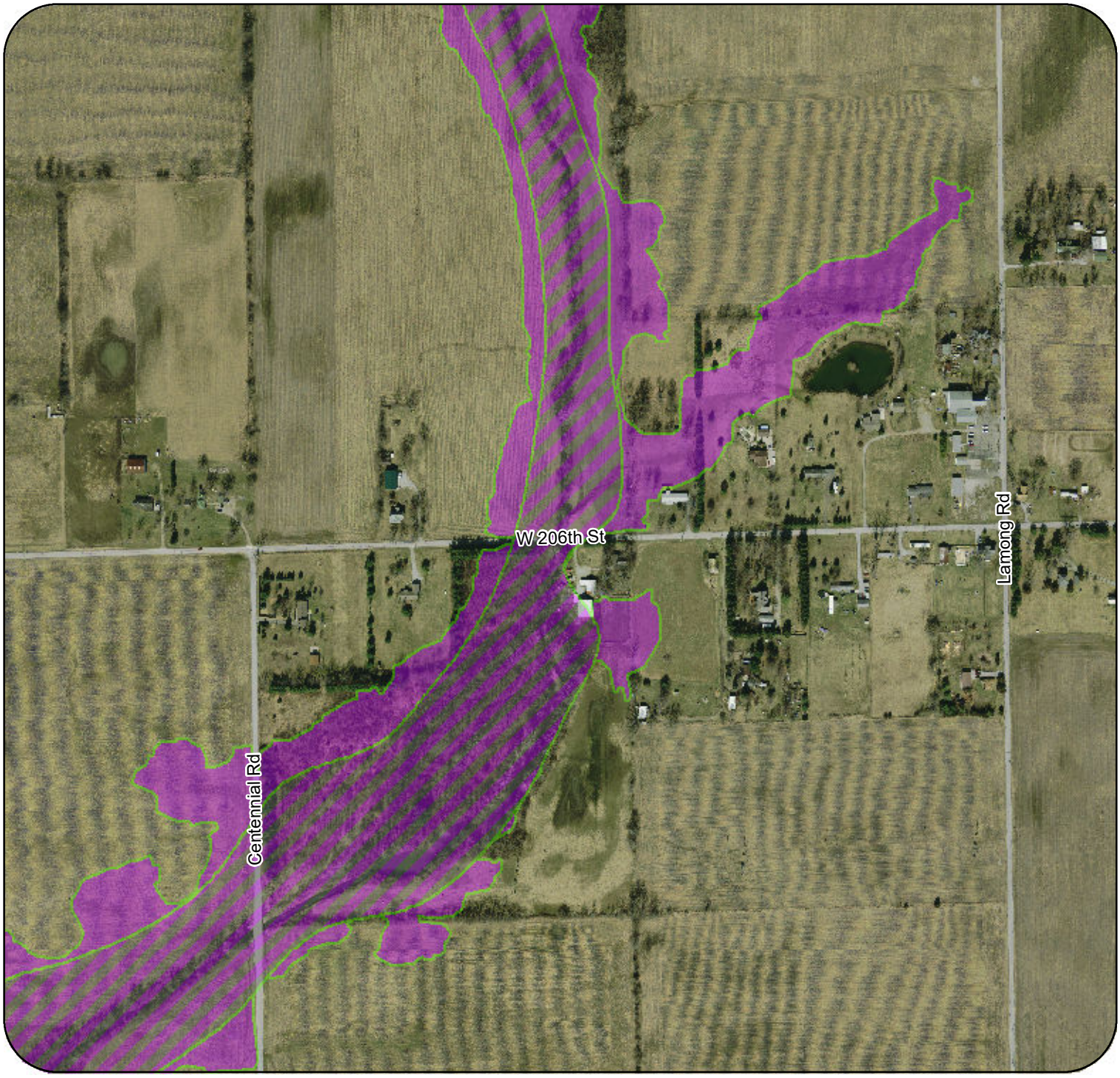

Prepared Date: 1/16/2020

The Special Flood Hazard Area was derived from the best available data from DNR Division of Water

While this map is provided for information, the FIRMs as published by FEMA are the authoritative documents for the National Flood Insurance Program.

Copies of those maps can be found at http://msc.fema.gov

Map Source: Best Available Data from DNR Division of Water (See Disclaimer on FARA)

File Number: FW-29962

Note

This map does not reflect changes or amendments which may have been made subsequent to the prepared date

INDIANA DEPARTMENT OF NATURAL RESOURCES

Legend

DNR Approximate Fringe

DNR Approximate Floodway

N

MAP SCALE 1" = 500'

0 250 500 1,000 FEET

0 75 150 300 METERS

Hamilton County Surveyor's Office
One Hamilton County Square, Suite 188
Noblesville, Indiana 46060
Office: (317) 776-8495 Fax: (317) 776-9628

Crossing Permit

Permit Number: **C-2020-00025** ***Issue Date:*** **June 18, 2020** ***Temporary:*** **N**

Drain Name: **CLARK, EMERY & SJ COMPTON DRAINAGE A** ***Project Name:*** 206th St. over Finley Creek Bridge

Project Location: On 206th Street 1600' west of Lamong Rd.

Crossing Type: Bridge ***# of Crossings:*** 1 ***Engineering Firm:*** Infrastructure Engineering

Purpose: Replacing existing twin culverts with a bridge. ***Plan Project Id:*** NA

Applicant:

Infrastructure Engineering
201 S. Capitol Ave., Ste. 49020
Indianapolis,IN
(317) 202-1285 (Business)

Contact: Nick Bergman, Infrastructure Eng.
317-202-1285

Conditions for Approval:

Please contact inspector Luther Cline at 317-408-8523, 48 hours prior to construction or as soon as possible if work has already commenced.

Parcels:

Parcel No: 08-05-20-00-00-002.000 Washington
Parcel No: 08-05-17-00-00-015.000 Washington

06/18/2020

Surveyor: ***Date:***

Nick Bergman

From: Farren, Amari <AFarren@idem.IN.gov>
Sent: Wednesday, April 8, 2020 8:30 AM
To: Nick Bergman
Subject: RE: IDEM 401 Application Submission

Nick,

Thank you. I've verified that the project meets the conditions of the 401 for the RGP. The project is assigned IDEM ID No. 2020-286-29-ALF-X.

Thanks,
Amari

From: Nick Bergman [mailto:nbergman@infrastructure-eng.com]
Sent: Wednesday, April 08, 2020 8:14 AM
To: Farren, Amari <AFarren@idem.IN.gov>
Cc: Nick Bergman <nbergman@infrastructure-eng.com>
Subject: RE: IDEM 401 Application Submission

**** This is an EXTERNAL email. Exercise caution. DO NOT open attachments or click links from unknown senders or unexpected email. ****

Amari,

Here is the letter from DNR.

Please let me know if I am missing anything or if you need any additional information.

Thanks,

Nick Bergman, PE | Design Group Manager
Infrastructure Engineering Inc.
Integrity | Excellence | Innovation

201 South Capitol Avenue | Suite 490 | Indianapolis, IN 46225
p: 317.243.9800 x1180 | d: 317.202.1285
f: 317.243.9100
nbergman@infrastructure-eng.com | www.infrastructure-eng.com

Please consider the environment before printing this e-mail.

DISCLAIMER: This e-mail and all files transmitted with it are intended solely for the addressee(s) and may be legally privileged and\or confidential. If you are not the intended recipient, you may not disclose, copy, distribute or take any action based on the contents hereof. If you are not the intended recipient of this email, please notify the sender immediately and delete the original message. Any unauthorized use and\or misuse, and disclosure of part of this email or its full content is prohibited and may be unlawful. Any views or opinions expressed in this e-mail and\or attachments are those of the sender and may not necessarily be those of the owner(s),

IDEM

INDIANA DEPARTMENT OF ENVIRONMENTAL MANAGEMENT
We Protect Hoosiers and Our Environment.
100 N. Senate Avenue • Indianapolis, IN 46204
(800) 451-6027 • (317) 232-8603 • www.idem.IN.gov

Michael R. Pence
Governor

Thomas W. Easterly
Commissioner

December 12, 2014

VIA CERTIFIED MAIL 91 7190 0005 2710 0036 9499

Ms. Lee Anne Devine
U.S. Army Corps of Engineers
Louisville District
P.O. Box 59
Louisville, KY 40201-0059

Dear Ms. Devine:

Re: Section 401 Water Quality Certification
Project: 2014 Reissuance of Regional
General Permit No. 1 for Indiana

The Office of Water Quality has reviewed the Joint Public Notice/Application for Section 401 Water Quality Certification (WQC) dated September 11, 2014. According to the application, the U.S. Army Corps of Engineers (USACE) proposes to reissue the Regional General Permit No. 1 (RGP #1) for the state of Indiana. The RGP #1 is intended to authorize categories of activities that are similar in nature and cause minimal individual and cumulative impacts to the aquatic environment.

The Louisville, Detroit, and Chicago Districts of the USACE developed the existing Indiana RGP to replace several Nationwide Permits (NWPs). As a consequence of this action, the following NWPs have been suspended and will not be in effect for the state of Indiana. The USACE proposes to suspend the following:

- NWP 13 Bank Stabilization
- NWP 14 Linear Transportation Projects
- NWP 18 Minor Discharges
- NWP 29 Residential Developments
- NWP 36 Boat Ramps
- NWP 39 Commercial and Institutional Developments
- NWP 40 Agricultural Activities
- NWP 41 Reshaping Existing Drainage Ditches
- NWP 42 Recreational Facilities
- NWP 43 Storm Water Management Facilities
- NWP 44 Mining Activities

Since these NWPs are suspended in Indiana, no Section 401 WQC decision is required.

Based on available information, it is the judgment of this office that the RGP #1 will comply with the applicable provisions of 327 IAC 2 and Sections 301, 302, 303, 306, and 307 of the Clean Water Act if the recipient of the certification complies with the conditions set forth below. Therefore, subject to the following terms and conditions, the Indiana Department of Environmental Management (IDEM) hereby grants Section 401 WQC for the RGP #1. Any changes in the language or scope of the RGP #1 not detailed in the Joint Public Notice/Application, or as modified by the conditions below, are not authorized by this certification.

APPLICANT RESPONSIBILITIES:

(1) An applicant seeking coverage under this Section 401 WQC must:

(a) Demonstrate, via letter from the Indiana Department of Natural Resources (IDNR), Division of Nature Preserves, that no state endangered, threatened, or rare species are documented on a permanent or seasonal basis within ½-mile radius of the proposed project site by the Indiana Natural Heritage Data Center, or provide documentation from the IDNR that states that the activities proposed will not constitute a violation of state laws protecting these species.

(b) Submit a complete Section 401 WQC Regional General Permit Notification Form (most current State Form 51937) at least 30 days prior to the activity. The notification must at a minimum provide applicant information, project location, existing project site conditions, project impacts, and a proposed plan. Failure to submit all required information will result in the project being considered out-of-scope and not authorized.

(c) Provide any additional information required by the IDEM to verify that a given project will qualify under the terms and conditions of this Section 401 WQC. If the applicant fails to provide any requested information, the project is not authorized.

(d) Allow the commissioner or an authorized representative of the commissioner (including an authorized contractor), upon the presentation of credentials, to enter upon the applicant's property to inspect the project site during the review of a proposed project.

(e) Notify IDEM of any project for which the USACE District Engineer has issued a waiver for the linear feet of stream impact in order to authorize the project under the RGP. IDEM will review the notification within 30 days to determine whether or not IDEM will also waive the linear feet of stream impact limit.

PERMITEE RESPONSIBILITIES

(1) Permitees qualifying for impacts under this Section 401 WQC must:

(a) Allow the commissioner or an authorized representative of the commissioner (including an authorized contractor), upon the presentation of credentials to:

1. Enter upon the permittee's property.
2. Access and copy at reasonable times any records that must be kept under the conditions of this certification.
3. Inspect, at reasonable times, any monitoring or operational equipment or method; collection, treatment, pollution management or discharge facility or device; practices required by this certification; and any mitigation wetland site.
4. Sample or monitor any discharge of pollutants or any mitigation site.

(b) Obtain any other permits or authorizations required for this project or related activities from IDEM or any other local, state, or federal agency or person. Land disturbing activities of one (1) acre or more or disturbances of less than an acre that are part of a larger common plan will require permit coverage for discharges associated with construction site run-off. Additional information should be obtained through the IDEM Storm Water Program at 317-233-1864. In addition, the Indiana Department of Natural Resources (317-232-4160 or toll free at 877-928-3755) should be contacted concerning the possible requirement of natural freshwater lake or floodway permits.

(c) Deposit any dredged material in a contained upland disposal area and implement appropriate measures to prevent sediment run-off to any waterbody.

(d) Install run-off and sediment control measures prior to any land disturbance to manage storm water and to minimize sediment from leaving the project site or entering a waterbody. All operations must phase project activities to minimize the impact of sediment to the receiving waterbody(ies). Erosion and sediment control measures shall be implemented using an appropriate order of construction (sequencing) relative to the land disturbing activities. Wetlands and/or water bodies that are adjacent to land disturbing activities must be protected with appropriate sediment control measures. As work progresses, all areas void of protective cover shall be re-vegetated or stabilized as described in the plan. Areas that are to be re-vegetated must utilize mulch that is anchored or, under more severe conditions, the erosion control blankets. Erosion control blankets or other armament shall be used for all areas associated with concentrated flow. Standards and specifications for storm water management, including erosion and sediment control can be obtained in the Indiana Storm Water Quality Manual or similar guidance documents.

TERMS OF THIS SECTION 401 WQC:

(1) IDEM, for any project that qualifies under the terms and conditions of this certification, may choose to require an individual Section 401 WQC if the agency determines that the project would have more than minimal impacts to water quality, either viewed individually or collectively with other projects that may impact the same waterbody affected by the proposed project.

(2) IDEM retains the right to review, modify, terminate, replace or amend this certification as needed to ensure that the federal permits or licenses certified do not result in violations of Indiana's Water Quality Standards or other applicable state laws. In the absence of another action by IDEM that would alter the termination

date of this certification, this certification shall expire with the expiration of the federal permit it certifies.

SPECIFIC CONDITIONS OF THIS SECTION 401 WQC

(1) This Section 401 WQC does not :

(a) Convey any property rights of any sort, or any exclusive privileges.
(b) Preempt any duty to obtain federal, state or local permits or authorizations required by law for the execution of the project or related activities.

(2) This Section 401 WQC does not authorize:

(a) Impacts or activities that do not meet the terms and conditions of this Section 401 WQC. Such activities require an individual Section 401 WQC from the IDEM.
(b) Any injury to permittees or private property or invasion of other private rights, or any infringement of federal, state or local laws or regulations.
(c) Changes to the original plan design detailed in the notification.
(d) The discharge of pollutants, principally sediment, associated with storm water run-off.
(e) Point source discharges of pollutants other than clean fill[1] and uncontaminated dredged material.
(f) Activities on or in any of the State's waters that have been designated as salmonid waters (cold water streams), tributaries of salmonid waters within a two river mile reach upstream from the confluence with the salmonid water, or Outstanding State and/or National Resource waters (see Attachment #1).
(g) Activities on or in any critical wetland or critical special aquatic sites (see Attachment #2).
(h) Activities associated with the establishment of a mitigation bank.

(3) This Section 401 WQC authorizes:

(a) Activities that will permanently impact one-tenth (0.10) of an acre or less of waters of the U.S.
(b) Activities that will have a cumulative permanent impact of 300 linear feet or less of waters of the U.S.
(c) Activities that will not permanently change the sinuosity, flow path, velocity, cross-sectional area under the Ordinary High Water Mark (OHWM), or the slope of a stream[2] except as specified in Conditions (3)(d), (3)(g), and (3)(i).

---

[1] Clean fill, for purposes of this WQC, means uncontaminated rocks, bricks, concrete without rebar, road demolition waste materials other than asphalt, or earthen material.

[2] Stream, for the purposes of this WQC, means waters of the U.S. that have a defined bed and bank and convey water ephemerally, intermittently or perennially. This term includes natural streams, relocated streams, channelized streams, artificial channels, encapsulated channels and ditches.

(d) Minimal changes to stream morphology, including minor relocations, which result in a net benefit to the aquatic ecosystem. Stream relocations may be authorized, provided the activity:
   1. Is associated with the installation of a stream crossing or replacement of an existing crossing, and results in a net benefit to the stream morphology.
   2. Does not reduce the cross-sectional area under the OHWM.
   3. Is accompanied by an acceptable restoration/stabilization plan.
   4. Does not accelerate stream instability. Examples of instability include, but are not limited to, stream bank erosion, channel enlargement, channel incision, degradation, aggradation, meander migration (down-valley and lateral accretion), avulsion and base-level shifts.

(e) Stream bank stabilization activities or new lake and reservoir shoreline stabilization that will permanently affect 300 linear feet or less and the applicant demonstrates that the bank or shoreline in question is unstable. Natural shoreline stabilization methods are required where there is no pre-existing seawall or other shoreline hard armament on a lake or reservoir. Natural shoreline stabilization methods include bank stabilization practices that benefit the aquatic environment by incorporating organic materials to produce functional structures, provide wildlife habitat, and provide areas for revegetation.

(f) Placement of riprap or other bank stabilization materials provided the design and installation is flush with the upstream and downstream bank and stream channel/lake bed elevations and grades.

(g) New bridge piers, piles, shafts or other support structures and their associated scour protection measures that do not significantly reduce the cross-sectional area of the stream and are located below the OHWM and outside the low flow channel of the stream.

(h) Activities that do not result in a permanent secondary effect to waters of the U.S. Potential secondary effects include, but are not limited to damming, loss of hydrology, and creation of in-channel ponds.

(i) New permanent stream encapsulations that are for the purpose of constructing a crossing must:
   1. Allow the passage of aquatic organisms in the waterbody.
   2. Not exceed 150 cumulative linear feet of encapsulation.
   3. Have a cross-sectional area at least twenty percent (20%) larger than the area under the OHWM of the stream immediately upstream and downstream of the encapsulation in the form of a single opening.
   4. Have a streambed slope within the encapsulation that matches the slope of the bed both immediately upstream and downstream.
   5. Not create or accelerate stream instability. Examples of stream instability include, but are not limited to head cutting, stream bank erosion, channel enlargement, channel incision, degradation, aggradation, meander migration, (down-valley and lateral accretion), avulsion and base-level shifts.

6. Either have no bottom (e.g., three sided culvert) or are embedded (sumped)[3] into the stream channel based on the following structure sizes and substrate types:
   a. Stream bed of sand
      - Structure < four (4) feet wide: Six (6) inch sump
      - Structure four (4) feet wide to 12 feet wide: 12 inch sump
      - Structure 12 feet to 20 feet wide: 18 inch sump
   b. Stream bed of other soil or unconsolidated till [4]
      - Structure < four (4) feet wide: Three (3) inch sump
      - Structure four (4) feet wide to 12 feet wide: Six (6) inch sump
      - Structure 12 feet to 20 feet wide: 12 inch sump
   c. Stream bed of bedrock or consolidated till [5]
      - Inside elevation of the structure bottom shall be a minimum of three (3) inches below the surface of the bedrock or consolidated till
7. Meet the following requirements when installed in perennial streams with OHWM width of 12 feet or greater. These encapsulations must:
   a. Be sumped to a greater depth if needed for the design of the streambed inside the encapsulation.
   b. Have a width equal to or wider than the existing OHWM.
   c. Have a natural stream bottom. If the stream bottom will be disturbed during construction (e.g. four sided box culverts or pipe culverts or because of footer work for three sided culverts), natural stream substrate must be placed in the encapsulation in accordance with the Federal Highway Administration Hydraulic Engineering Circular No. 26: Culvert Design for Aquatic Organism Passage.
   d. Have a low flow channel constructed or restored through the encapsulation. The low flow channel shall have the same width, depth, and side slope as the natural upstream and downstream low flow channel. If the upstream and downstream channels are highly degraded a V-shaped channel with 5:1 slopes within the structure may be substituted.

(j) Stream pump-around activities, provided:
1. The discharge from the activity does not cause erosion at the outlet.
2. Cofferdam dewatering activities are directed to a filter bag(s), upland sediment basins/traps, or a combination of other appropriate sediment control measures to minimize the discharge of sediment-laden water into waters of the U.S.
3. All sediment control measures are installed and maintained in good working order.
4. Any materials used for an in-stream dam are constructed using non erodible materials. Examples include sand bags and sheet pile walls.

---

[3] Sump, for the purpose of this Water Quality Certification, means the inside elevation of the bottom of the structure is placed at a specified depth below the grade of the stream.

[4] Other soil and unconsolidated till includes substrates that are more cohesive and less mobile (e.g. clay, silt, gravel, and cobble substrates).

[5] Consolidated till includes dense hard materials such as hardpan.

(k) The installation of temporary work causeways when the activity is conducted in a manner that maintains near normal downstream flows and is constructed of material that can be expected to withstand high flow events.

(l) The use of temporary structures provided the structures are removed in their entirety and the stream channel restored to preconstruction grades, contours, and vegetative conditions.

(m) Multiple impacts on a project as long as the cumulative amount of those impacts are less than the most restrictive thresholds of this Section 401 WQC.

Failure to comply with the terms and conditions of this Section 401 Water Quality Certification may result in an enforcement action. If an enforcement action is pursued, civil penalties could be assessed up to $25,000 per day. Criminal liability may apply if it is determined that the Section 401 Water Quality Certification was violated willfully or negligently.

This certification is effective eighteen (18) days from the mailing of this notice unless a petition for review and a petition for stay of effectiveness are filed within this 18-day period. If a petition for review and a petition for stay of effectiveness are filed within this period, any part of the certification within the scope of the petition for stay is stayed for fifteen (15) days, unless or until an Environmental Law Judge further stays the certification in whole or in part.

This decision may be appealed in accordance with IC 4-21.5, the Administrative Orders and Procedures Act. The steps that must be followed to qualify for review are:

(1) You must petition for review in writing that states facts demonstrating that you are either the person to whom this decision is directed, a person who is aggrieved or adversely affected by the decision, or a person entitled to review under any law.

(2) You must file the petition for review with the Office of Environmental Adjudication (OEA) at the following address:

Office of Environmental Adjudication
100 North Senate Avenue
IGCN Room N501
Indianapolis, IN 46204

(3) You must file the petition within eighteen (18) days of the mailing date of this decision. If the eighteenth day falls on a Saturday, Sunday, legal holiday, or other day that the OEA offices are closed during regular business hours, you may file the petition the next day that the OEA offices are open during regular business hours. The petition is deemed filed on the earliest of the following dates: the date it is personally delivered to OEA; the date that the envelope containing the petition is postmarked if it is mailed by United States mail; or, the date it is shown to have been deposited with a private carrier on the private carrier's receipt, if sent by private carrier.

Identifying the certification, decision, or other order for which you seek review by number, name of the applicant, location, or date of this notice will expedite review of the petition.

Note that if a petition for review is granted pursuant to IC 4-21.5-3-7, the petitioner will, and any other person may, obtain notice of any prehearing conferences, preliminary hearings, hearings, stays, and any orders disposing of the proceedings by requesting copies of such notices from OEA.

If you have procedural questions regarding filing a petition for review you may contact the Office of Environmental Adjudication at 317-232-8591.

If you have any questions about this certification, please contact Jason Randolph, Project Manager, of my staff by phone at 317-233-0467, or by e-mail at jrandolp@idem.in.gov.

Sincerely,

Martha Clark Mettler

Martha Clark Mettler
Deputy Assistant Commissioner
Office of Water Quality

cc: Norma Condra, USACE-Louisville
Kerrie Kuhne, USACE-Detroit
Paul Leffler, USACE-Chicago
Scott Pruitt, USFWS
Matt Buffington, IDNR
Randy Braun, IDEM

Attachment 1: Indiana Waters Designated for Special Protection

Designated Salmonid Waters:
[327 IAC 2-1.5-5(a)(3)]

- Trail Creek and its tributaries downstream to Lake Michigan, LaPorte County
- East Branch of the Little Calumet River and its tributaries downstream to Lake Michigan via Burns Ditch, Porter and LaPorte Counties
- Salt Creek above (upstream of) its confluence with the Little Calumet River, Porter County
- Kintzele Ditch (Black Ditch) from Beverly Drive downstream to Lake Michigan, Porter County
- The Galena River and its tributaries, LaPorte County
- The St. Joseph River and its tributaries in St. Joseph County from the Twin Branch Dam in Mishawaka downstream to the Indiana/Michigan state line, St. Joseph County
- The Indiana portion of the open waters of Lake Michigan
- Those waters designated by the Indiana Department of Natural Resources (IDNR) for put-and-take trout fishing[6]

Waterbodies which have been designated all or partially as Outstanding State Resource Waters: [327 IAC 2-1.3-3 and 327 IAC 2-1.5-19(b)]

- The Blue River in Washington, Crawford, and Harrison Counties, from river mile 57.0 to river mile 11.5
- The North Fork of Wildcat Creek in Carroll and Tippecanoe Counties, from river mile 43.11 to river mile 4.82
- The South Fork of Wildcat Creek in Tippecanoe County, from river mile 10.21 to river mile 0.00
- Cedar Creek in Allen and DeKalb counties, from river mile 13.7 to its confluence with the St. Joseph River
- The Indiana portion of the open waters of Lake Michigan
- All waters incorporated in the Indiana Dunes National Lakeshore.

Waterbodies which have been designated all or partially as Exceptional Use Streams[7]: [listed in: 327 IAC 2-1-11(b) and IC 13-11-2-72.5 (before its repeal)]

- Big Pine Creek in Warren County downstream of the State Road 55 bridge near the town of Pine Village to its confluence with the Wabash River
- Mud Pine Creek in Warren County from the bridge on the County Road between Brisco and Rainsville to its confluence with Big Pine Creek
- Fall Creek in Warren County from the old C.R. 119 bridge in the NW quarter of Section 21, Township 22N, Range 8W downstream to its confluence with Big Pine Creek
- Indian Creek in Montgomery County from the County Road 650 West bridge downstream to its confluence with Sugar Creek
- Clifty Creek in Montgomery County within the boundaries of Pine Hills Nature Preserve
- Bear Creek in Fountain County from the bridge on County Road 450 North to its confluence with the Wabash River

---

[6] Available on the internet under trout stocking locations at: http://www.in.gov/dnr/fishwild/3622.htm.
[7] As per IC 13-18-3-2(u): "Each exceptional use water (as defined in IC 13-11-2-72.5, before its repeal) designated by the board before June 1, 2009, becomes an outstanding state resource water on June 1, 2009, by operation of law."

- Rattlesnake Creek in Fountain County from the bridge on County Road 450 North to its confluence with Bear Creek
- The small tributary to Bear Creek in Fountain County within the Portland Arch Nature Preserve which enters Bear Creek at the sharpest bend and has formed the small natural bridge called Portland Arch
- Blue River from the confluence of the West and Middle Forks of the Blue River in Washington County downstream to its confluence with the Ohio River
- The South Fork of Blue River in Washington County from the Horner's Chapel Road bridge downstream to its confluence with Blue River.
- Lost River and all surface and underground tributaries upstream from the Orangeville Rise (T2N, R1W, Section 6) and the Rise of Lost River (T2N, R1W, Section 7) and the mainstem of the Lost River from the Orangeville Rise downstream to its confluence with the East Fork of White River.

Attachment 2: Critical Wetlands and Critical Special Aquatic Sites

In the interest of maintaining consistency with the State Regulated (Isolated) Wetland program established at 327 IAC 17, IDEM defines Critical Wetlands and Critical Special Aquatic Sites to be synonymous with Rare and Ecologically Important Wetland Types under 327 IAC 17-1-3(3)(B):

- **Acid bog:** Acid bog is an acidic wetland of kettle holes in glacial terrain. Bogs can be graminoid (Carex spp. and Sphagnum spp.) or low shrub (Chamaedaphne calyculata and Betula pumila). The graminoid bog can be a floating, quaking mat. The soils in acid bogs are saturated and acidic peat. Bogs have non-flowing or very slow flowing water. The water level fluctuates seasonally. When a sphagnum mat floats, it rises and falls with the water table. Acid bogs can be found in northern Indiana.
- **Acid seep:** Acid seep is a bog-like wetland typically found in unglaciated hill regions. This community is a small groundwater-fed wetland located primarily in upland terrain. A thin layer of muck may lie over a mineral substrate. The soil reaction is acid. This seep community is characterized by flowing water during at least part of the year. Acid seeps are located primarily in southern Indiana.
- **Circumneutral bog:** Circumneutral bog is a bog-like wetland that receives groundwater. Circumneutral bogs can be a mosaic of tall shrub bog, graminoid bog, and other communities. The graminoid bog often occurs on a quaking or floating mat. Although a few bogs occur in unglaciated regions, most are found in glacial ice-block depressions. The soils in circumneutral bogs are usually peat, or other low nutrient organic substrates, which are saturated and circumneutral to slightly acid. Circumneutral bogs have non-flowing or very slow flowing water. The water level fluctuates seasonally. Circumneutral bogs are usually found in northern Indiana.
- **Circumneutral seep:** The circumneutral seep (or seep-spring) is a groundwater-fed wetland on organic soil. It is primarily herbaceous. Species typically include marsh marigold (Caltha palustris) and skunk cabbage (Symplocarpus foetidus) with a scattered tree canopy. Circumneutral seep is typically situated on or near the base of a slope. The soil is typically circumneutral muck. This seep community is characterized by slowly flowing water during at least part of the year. Circumneutral seeps can be found scattered throughout Indiana.
- **Cypress swamp:** Bald cypress swamps are seasonally to permanently inundated wetlands found in depressions and sloughs of large bottomlands associated with the Wabash/Ohio River system. Poorly to very poorly drained soils characterize this environment. Bald cypress (Taxodium distichum) is present, and green ash (Fraxinus pennsylvanica), silver maple (Acer saccharinum), and overcup oak (Quercus lyrata) are also usually present. This community is restricted to extreme southwest Indiana.
- **Dune and swale:** Dune and swale is an ecological system consisting of a mixture of upland (black oak sand savanna, dry to mesic sand prairie) and wetland (pond, panne, sedge meadow, marsh, wet prairie) natural communities. These communities occur in long, narrow, linear complexes, with the dry communities occupying sand ridges, and the wet communities occurring in the intervening swales. Black oak (Quercus velutina), paper birch (Betula papyrifera), jack pine (Pinus banksiana), and prairie vegetation typically occur on the ridges, and sedges, reeds, and marsh/aquatic vegetation line are found in the swales. Water levels are directly influenced by ground water, with the interdunal swales controlled largely by lateral flow through porous beach ridges. Dune and swale is restricted to extreme northwest Indiana, near Lake Michigan.

- **Fen:** Fen is a calcareous, groundwater-fed wetland. Fens are often a mosaic of grassy areas, sedgy areas, graminoid-shrubby cinquefoil, and tall shrub areas. The extent of the tall shrub component of fens may be determined by fire frequency and/or soil moisture. Drying of the soil increases the growth of shrubs. Fens typically occur in the vicinity of glacial moraines. Fens typically have a muck or peat substrate. The water level fluctuates seasonally and is fed by groundwater. Fens can be found in central and northern Indiana.
- **Forested fen:** Forested fen is a tree-dominated wetland on organic soil which receives groundwater. Forested fens are often a mosaic of treed areas, tall shrub areas, and herbaceous areas. A tall shrub layer is often well developed in forested fens. Indicative species typically include tamarack (Larix laricina), black ash (Fraxinus nigra), yellow birch (Betula alleghaniensis), poison sumac (Toxicodendron vernix), and red maple (Acer rubrum). Forested fens occur in wet lowlands, where moraines meet outwash features or depressions. Forested fens have saturated, poorly to very poorly drained soils that are often muck, but some seasonal flooding can occur in forested fens that are especially level. This community is a late successional stage of fen or circumneutral bog. Forested fens occur in northern Indiana.
- **Forested swamp:** Forested swamp is a seasonally inundated to intermittently exposed wetland of large river bottoms. Forested swamps do not receive direct flow from river flooding except under exceptional circumstances. Forested swamps occur in depressions, sloughs and large bottomlands, typically dominated by tree species such as swamp cottonwood (Populus heterophylla), green ash (Fraxinus pennsylvanica), and swamp white oak (Quercus bicolor). In northern Indiana important tree species include black ash (Fraxinus nigra), yellow birch (Betula alleghaniensis), and red maple (Acer rubrum). Poorly to very poorly drained and aerated soils characterize the swamp environment. Soils usually are mineral not muck or peat. This community type is found throughout Indiana.
- **Marl beach:** Marl beach is a fen-like community located on the marly muck shorelines of lakes. Marl precipitate is evident. A thin layer of water is present in spring, but dries down in summer. Draw-down of a lake creates additional area for this community to develop on. Marl beaches can be found in extreme northern Indiana, primarily in the northeast.
- **Muck flat:** Muck flat is a shoreline and lake community possessing a unique flora of sedges and annual plants, many of which are also found on the Atlantic and Gulf Coastal Plains. This community is found at the margins of lakes or covering shallow basins. This community has a peat substrate. The muck flats can float on the water surface, but during high water periods are usually inundated. The water level of a basin fluctuates during a season or from year to year in response to the amount of precipitation. This exposes bare substrate needed for germination by species of the community. Muck flats are found in northern Indiana.
- **Panne:** Panne is a groundwater fed herbaceous wetland occupying interdunal swales near Lake Michigan. Pannes are located on the lee side of the first or second line of dunes from the lakeshore. The soil is wet, calcareous sand. Pannes are located in counties bordering Lake Michigan.
- **Sand flat:** Sand flat is a shoreline and lake community possessing a unique flora of sedges and annual plants, many of which are also found on the Atlantic and Gulf Coastal Plains. This community is found at the margins of lakes or covering shallow basins. This community has a sand substrate. During high water periods sand flats at the margins of lakes or ponds are inundated. The water level of a basin fluctuates during a season or from year to year in response to the amount of precipitation. This exposes bare substrate needed for germination by species of the community. Sand flats occur in northern Indiana, and in the Plainville Sand Section of southwest Indiana.

- **Sedge meadow:** Sedge meadow is an herbaceous wetland typically dominated by graminoid species such as flat sedge (Cyperus spp.), spike rush (Eleocharis spp.), rushes (Juncus spp.) and sedges (Carex spp.). Sedge meadow is an herbaceous wetland of stream margins and river floodplains, and lake margins or upland depressions. Streamside sedge meadows are frequently flooded in the spring and early summer. Sedge meadows of lake margins and depressions often contain standing water during wet months and after heavy rains; during dry periods, the water level is at or just below the substrate. Sedge meadow usually occupies the ground between a marsh and the uplands, or a shrub swamp or wet forest. Periodic high water can kill trees and shrubs invading sedge meadows. Sedge meadows can be found in the northern half of the state.
- **Shrub swamp:** Shrub swamp is a shrub-dominated wetland that is seasonally inundated to intermittently exposed. This community occurs in depressions and the substrate in either mineral soils or muck, as opposed to peat which is characteristic of bogs. Shrub swamp is characterized by non-flowing or very slowly flowing water with levels that fluctuate seasonally. Shrub swamps are persistent, though considered successional. Two opportunistic native shrubs, sandbar willow (Salix exigua) and gray dogwood (Cornus racemosa), by themselves, are not indicative of shrub swamps. This community type is found throughout Indiana.
- **Sinkhole pond:** Sinkhole ponds are water-containing depressions in karst topography. Sinkhole ponds are found in the Mitchell Karst Plain in south-central Indiana.
- **Sinkhole swamp:** Sinkhole swamps are depressions in karst topography dominated by tree or shrub species. Sinkhole swamps are found in the Mitchell Karst Plain in south-central Indiana.
- **Wet floodplain forest:** Wet floodplain forest is a broadleaf deciduous forest of river floodplains. Wet floodplain forests occur in depressions and flats on narrow to wide floodplains and also on recently exposed substrates that are frequently flooded. Wet floodplain forests are frequently flooded and may have standing water seasonally to permanently present. Wet floodplain forests occur statewide.
- **Wet prairie:** Wet prairie is an herbaceous wetland typically dominated by graminoid species such as prairie cordgrass (Spartina pectinata), bluejoint (Calamagrostis canadensis), and sedges (Carex spp.). Vegetation height is often 2-3 m. The species diversity of wet prairies is lower than that of mesic prairies. Wet prairies occur in deep swales and the substrate ranges from very deep black mineral soils (which are high in organic matter) to muck. Ponding in spring lasts for several weeks prior to drainage. Wet prairies commonly occur in the Grand Prairie Natural Region, the Tipton Till Plain and the Bluffton Till Plain, with a few examples found in the Northern Lakes Natural Region.
- **Wet sand prairie:** Wet sand prairie is an herbaceous wetland typically dominated by graminoid species such as prairie cordgrass (Spartina pectinata), bluejoint (Calamagrostis canadensis), and sedges (Carex spp.). Vegetation height is often 2-3 m. The species diversity of wet prairies is lower than that of mesic prairies. Wet lowland prairies occur in deep swales and the substrate is sand, sometimes mixed with muck. Flooding is a regular springtime occurrence in wet sand prairie and may last several weeks. This community occurs in a mosaic with marsh and other wetlands, and with upland prairies and sand savannas. Fire was frequent occurrence, but more common in the fall when waters had receded. This community occurs in northwest Indiana and in the Plainsville Sands area.

DEPARTMENT OF THE ARMY
U.S. ARMY CORPS OF ENGINEERS, LOUISVILLE DISTRICT
INDIANAPOLIS REGULATORY OFFICE
8902 OTIS AVENUE, SUITE S106B
INDIANAPOLIS, IN 46216

May 18, 2020

Regulatory Division
North Branch
ID No. LRL-2020-370-lcl

Mr. Faraz J. Khan
Hamilton County Highway Department
1700 S. 10th Street
Noblesville, Indiana 46060

Dear Mr. Khan:

This is in regard to your application dated April 21, 2020, for a Department of the Army permit to authorize the proposed replacement of Small Structure No. 21037 (Bridge No. 311) carrying 206th Street over Finley Creek. The work would include replacing the existing twin corrugated metal pipes with a single span concrete bridge and placing riprap scour protection into approximately 80 linear feet (0.03 acre) of the stream. The project is located at Latitude: 40.0855° N, Longitude: 86.2091° W, Sheridan, Hamilton County, Indiana. We have reviewed the submitted data relative to Section 404 of the Clean Water Act (CWA).

We have determined that the proposed project is authorized under the provisions of our Nationwide Permit (NWP) 33 CFR 330 (3) for Maintenance as published in the Federal Register on January 6, 2017. We do require compliance with the enclosed Terms and General Conditions of the NWP. Compliance is also required with the Section 401 Water Quality Certification issued by the Indiana Department of Environmental Management (IDEM) dated March 15, 2017.

The enclosed Compliance Certification form shall be submitted to the District Engineer within 30 days of completion of the authorized activity. This authorization is valid until March 18, 2022.

If you have any questions concerning this matter, please contact me by writing to the above address, or by calling 317-543-9424. Any correspondence should reference our assigned Identification Number LRL-2020-370-lcl.

Sincerely,

Laban C. Lindley
Team Leader
Indianapolis Regulatory Office

Enclosures
Copy Furnished: IDEM (Farren)
Infrastructure Engineering (Khan)

Compliance Certification

Permit Number: LRL-2020-370-lcl

Name of Permittee: Hamilton County Highway Department

Agent: Infrastructure Engineering, Inc.

Date of Issuance: May 18, 2020

Within 30 days of completion of the activity authorized by this permit and any mitigation required by this permit, sign this certification and return it to the following address:

USACE - Louisville District
Indianapolis Regulatory Office
8902 Otis Avenue, Suite S106B
Indianapolis, IN 46216-1055

Please note that your permitted activity is subject to a compliance inspection by an U.S. Army Corps of Engineers representative. If you fail to comply with this permit you are subject to permit suspension, modification, or revocation.

I hereby certify that the work authorized by the above referenced permit has been completed in accordance with the terms and conditions of the said permit, and required mitigation was completed in accordance with the permit conditions.

_____ _____

Signature for Permittee (Faraz Khan) — Date

Terms for Nationwide Permit No. 3 – Maintenance

(a) The repair, rehabilitation, or replacement of any previously authorized, currently serviceable structure or fill, or of any currently serviceable structure or fill authorized by 33 CFR 330.3, provided that the structure or fill is not to be put to uses differing from those uses specified or contemplated for it in the original permit or the most recently authorized modification. Minor deviations in the structure's configuration or filled area, including those due to changes in materials, construction techniques, requirements of other regulatory agencies, or current construction codes or safety standards that are necessary to make the repair, rehabilitation, or replacement are authorized. This NWP also authorizes the removal of previously authorized structures or fills. Any stream channel modification is limited to the minimum necessary for the repair, rehabilitation, or replacement of the structure or fill; such modifications, including the removal of material from the stream channel, must be immediately adjacent to the project. This NWP also authorizes the removal of accumulated sediment and debris within, and in the immediate vicinity of, the structure or fill. This NWP also authorizes the repair, rehabilitation, or replacement of those structures or fills destroyed or damaged by storms, floods, fire or other discrete events, provided the repair, rehabilitation, or replacement is commenced, or is under contract to commence, within two years of the date of their destruction or damage. In cases of catastrophic events, such as hurricanes or tornadoes, this two-year limit may be waived by the district engineer, provided the permittee can demonstrate funding, contract, or other similar delays.

(b) This NWP also authorizes the removal of accumulated sediments and debris outside the immediate vicinity of existing structures (e.g., bridges, culverted roadcrossings, water intake structures, etc.). The removal of sediment is limited to the minimum necessary to restore the waterway in the vicinity of the structure to the approximate dimensions that existed when the structure was built, but cannot extend farther than 200 feet in any direction from the structure. This 200 foot limit does not apply to maintenance dredging to remove accumulated sediments blocking or restricting outfall and intake structures or to maintenance dredging to remove accumulated sediments from canals associated with outfall and intake structures. All dredged or excavated materials must be deposited and retained in an area that has no waters of the United States unless otherwise specifically approved by the district engineer under separate authorization.

(c) This NWP also authorizes temporary structures, fills, and work, including the use of temporary mats, necessary to conduct the maintenance activity. Appropriate measures must be taken to maintain normal downstream flows and minimize flooding to the maximum extent practicable, when temporary structures, work, and discharges, including cofferdams, are necessary for construction activities, access fills, or dewatering of construction sites. Temporary fills must consist of materials, and be placed in a manner, that will not be eroded by expected high flows. After conducting the maintenance activity, temporary fills must be removed in their entirety and the affected areas returned to pre-construction elevations. The areas affected by temporary fills must be revegetated, as appropriate.

(d) This NWP does not authorize maintenance dredging for the primary purpose of navigation. This NWP does not authorize beach restoration. This NWP does not authorize new stream channelization or stream relocation projects.

Notification: For activities authorized by paragraph (b) of this NWP, the permittee must submit a pre-construction notification to the district engineer prior to commencing the

activity (see general condition 32). The pre-construction notification must include information regarding the original design capacities and configurations of the outfalls, intakes, small impoundments, and canals. (Authorities: Section 10 of the Rivers and Harbors Act of 1899 and section 404 of the Clean Water Act (Sections 10 and 404))

Note: This NWP authorizes the repair, rehabilitation, or replacement of any previously authorized structure or fill that does not qualify for the Clean Water Act section 404(f) exemption for maintenance.

US Army Corps of Engineers®
Louisville District

2017 Nationwide Permit General Conditions

The following General Conditions must be followed in order for any authorization by NWP to be valid:

1. Navigation. (a) No activity may cause more than a minimal adverse effect on navigation.

(b) Any safety lights and signals prescribed by the US Coast Guard, through regulations or otherwise, must be installed and maintained at the permittee's expense on authorized facilities in navigable waters of the United States.

(c) The permittee understands and agrees that, if future operations by the United States require the removal, relocation, or other alteration, of the structure or work herein authorized, or if, in the opinion of the Secretary of the Army or his authorized representative, said structure or work shall cause unreasonable obstruction to the free navigation of the navigable waters, the permittee will be required, upon due notice from the Corps of Engineers, to remove, relocate, or alter the structural work or obstructions caused thereby, without expense to the United States. No claim shall be made against the United States on account of any such removal or alteration.

2. Aquatic Life Movements. No activity may substantially disrupt the necessary life cycle movements of those species of aquatic life indigenous to the waterbody, including those species that normally migrate through the area, unless the activity's primary purpose is to impound water. All permanent and temporary crossings of waterbodies shall be suitably culverted, bridged, or otherwise designed and constructed to maintain low flows to sustain the movement of those aquatic species.

3. Spawning Areas. Activities in spawning areas during spawning seasons must be avoided to the maximum extent practicable. Activities that result in the physical destruction (e.g., through excavation, fill, or downstream smothering by substantial turbidity) of an important spawning area are not authorized.

4. Migratory Bird Breeding Areas. Activities in waters of the United States that serve as breeding areas for migratory birds must be avoided to the maximum extent practicable.

5. Shellfish Beds. No activity may occur in areas of concentrated shellfish populations, unless the activity is directly related to a shellfish harvesting activity authorized by NWPs 4 and 48, or is a shellfish seeding or habitat restoration activity authorized by NWP 27.

6. Suitable Material. No activity may use unsuitable material (e.g., trash, debris, car bodies, asphalt, etc.). Material used for construction or discharged must be free from toxic pollutants in toxic amounts (see Section 307 of the Clean Water Act).

7. Water Supply Intakes. No activity may occur in the proximity of a public water supply intake, except where the activity is for the repair or improvement of public water supply intake structures or adjacent bank stabilization.

8. Adverse Effects From Impoundments. If the activity creates an impoundment of water, adverse effects to the aquatic system due to accelerating the passage of water, and/or restricting its flow must be minimized to the maximum extent practicable.

9. Management of Water Flows. To the maximum extent practicable, the pre-construction course, condition, capacity, and location of open waters must be maintained for each activity, including stream channelization, storm water management activities, and temporary and permanent road crossings, except as provided below. The activity must be constructed to withstand expected high flows. The activity must not restrict or impede the passage of normal or high flows, unless the primary purpose of the activity is to impound water or manage high flows. The activity may alter the pre-construction course, condition, capacity, and location of open waters if it benefits the aquatic environment (e.g., stream restoration or relocation activities).

10. Fills Within 100-Year Floodplains. The activity must comply with applicable FEMA-approved state or local floodplain management requirements.

11. Equipment. Heavy equipment working in wetlands or mudflats must be placed on mats, or other measures must be taken to minimize soil disturbance.

12. Soil Erosion and Sediment Controls. Appropriate soil erosion and sediment controls must be used and maintained in effective operating condition during construction, and all exposed soil and other fills, as well as any work below the ordinary high water mark or high tide line, must be permanently stabilized at the earliest practicable date. Permittees are encouraged to perform work within waters of the United States during periods of low-flow or no-flow, or during low tides.

13. Removal of Temporary Fills. Temporary fills must be removed in their entirety and the affected areas returned to pre-construction elevations. The affected areas must be revegetated, as appropriate.

14. Proper Maintenance. Any authorized structure or fill shall be properly maintained, including maintenance to ensure public safety and compliance with applicable NWP general conditions, as well as any activity-specific conditions added by the district engineer to an NWP authorization.

15. Single and Complete Project. The activity must be a single and complete project. The same NWP cannot be used more than once for the same single and complete project.

16. Wild and Scenic Rivers. (a) No activity may occur in a component of the National Wild and Scenic River System, or in a river officially designated by Congress as a “study river” for possible inclusion in the system while the river is in an official study status, unless the appropriate Federal agency with direct management responsibility for such river, has determined in writing that the proposed activity will not adversely affect the Wild and Scenic River designation or study status.

(b) If a proposed NWP activity will occur in a component of the National Wild and Scenic River System, or in a river officially designated by Congress as a “study river” for possible inclusion in the system while the river is in an official study status, the permittee must submit a pre-construction notification (see general condition 32). The district engineer will coordinate the PCN with the Federal agency with direct management responsibility for that river. The permittee shall not begin the NWP activity until notified by the district engineer that the Federal agency with direct management responsibility for that river has determined in writing that the proposed NWP activity will not adversely affect the Wild and Scenic River designation or study status.

(c) Information on Wild and Scenic Rivers may be obtained from the appropriate Federal land management agency responsible for the designated Wild and Scenic River or study river (e.g., National Park Service, U.S. Forest Service, Bureau of Land Management, U.S. Fish and Wildlife Service). Information on these rivers is also available at: http://www.rivers.gov/

17. Tribal Rights. No activity may impair tribal rights (including treaty rights), protected tribal resources, or tribal lands.

18. Endangered Species. (a) No activity is authorized under any NWP which is likely to directly or indirectly jeopardize the continued existence of a threatened or endangered species or a species proposed for such designation, as identified under the Federal Endangered Species Act (ESA), or which will directly or indirectly destroy or adversely modify the critical habitat of such species. No activity is authorized under any NWP which “may affect” a listed species or critical habitat, unless section 7 consultation addressing the effects of the proposed activity has been completed. Direct effects are the immediate effects on the listed species and critical habitat caused by the NWP activity. Indirect effects are those effects on listed species and critical habitat that are caused by the NWP activity and are later in time, but still are reasonably certain to occur.

(b) Federal agencies should follow their own procedures for complying with the requirements of the ESA. If pre-construction notification is required for the proposed activity, the Federal permittee must provide the district engineer with the appropriate documentation to demonstrate compliance with those requirements. The district engineer will verify that the appropriate documentation has been submitted. If the appropriate documentation has not been submitted, additional ESA section 7 consultation may be necessary for the activity and the respective federal agency would be responsible for fulfilling its obligation under section 7 of the ESA.

(c) Non-federal permittees must submit a pre-construction notification (PCN) to the district engineer if any listed species or designated critical habitat might be affected or is in the vicinity of the activity, or if the activity is located in designated critical habitat, and shall not begin work on the activity until notified by the district engineer that the requirements of the ESA have been satisfied and that the activity is authorized. For activities that might affect Federally-listed endangered or threatened species or designated critical habitat, the PCN must include the name(s) of the endangered or threatened species that might be affected by the proposed activity or that utilize the designated critical habitat that might be affected by the proposed work. The district engineer will determine whether the proposed activity "may affect" or will have "no effect" to listed species and designated critical habitat and will notify the non-Federal applicant of the Corps' determination within 45 days of receipt of a complete PCN. In cases where the non-Federal applicant has identified listed species or critical habitat that might be affected or is in the vicinity of the activity, and has so notified the Corps, the applicant shall not begin work until the Corps has provided notification the proposed activities will have "no effect" on listed species or critical habitat, or until Section 7 consultation has been completed. If the non-Federal applicant has not heard back from the Corps within 45 days, the applicant must still wait for notification from Corps.

(d) As a result of formal or informal consultation with the USFWS or NMFS the district engineer may add species-specific permit conditions to the NWPs.

(e) Authorization of an activity by a NWP does not authorize the "take" of a threatened or endangered species as defined under the ESA. In the absence of separate authorization (e.g., an ESA Section 10 Permit, a Biological Opinion with "incidental take" provisions, etc.) from the USFWS or the NMFS, the Endangered Species Act prohibits any person subject to the jurisdiction of the United States to take a listed species, where "take" means to harass, harm, pursue, hunt, shoot, wound, kill, trap, capture, or collect, or to attempt to engage in any such conduct. The word "harm" in the definition of "take" means an act which actually kills or injures wildlife. Such an act may include significant habitat modification or degradation where it actually kills or injures wildlife by significantly impairing essential behavioral patterns, including breeding, feeding or sheltering.

(f) If the non-federal permittee has a valid ESA section 10(a)(1)(B) incidental take permit with an approved Habitat Conservation Plan for a project or a group of projects that includes the proposed NWP activity, the non-federal applicant should provide a copy of that ESA section 10(a)(1)(B) permit with the PCN required by paragraph (c) of this general condition. The district engineer will review the ESA section 10(a)(1)(B) permit, and if he or she determines that it covers the proposed NWP activity, including any incidental take of listed species that might occur as a result of conducting the proposed NWP activity, the district engineer does not need to conduct a separate section 7 consultation for the proposed NWP activity. The district engineer will notify the non-federal applicant within 45 days of receipt of a complete PCN whether the ESA section 10(a)(1)(B) permit covers the proposed NWP activity or whether additional ESA section 7 consultation is required.

(g) Information on the location of threatened and endangered species and their critical habitat can be obtained directly from the offices of the USFWS and NMFS or their world wide web pages at http://www.fws.gov/ or http://www.fws.gov/ipac and http://www.nmfs.noaa.gov/pr/species/esa respectively.

19. Migratory Birds and Bald and Golden Eagles. The permittee is responsible for ensuring their action complies with the Migratory Bird Treaty Act and the Bald and Golden Eagle Protection Act. The permittee is responsible for contacting appropriate local office of the U.S. Fish and Wildlife Service to determine applicable measures to reduce impacts to migratory birds or eagles, including whether "incidental take" permits are necessary and available under the Migratory Bird Treaty Act or Bald and Golden Eagle Protection Act for a particular activity.

20. Historic Properties. (a) In cases where the district engineer determines that the activity may have the potential to cause effects to properties listed, or eligible for listing, in the National Register of Historic Places, the activity is not authorized, until the requirements of Section 106 of the National Historic Preservation Act (NHPA) have been satisfied.

(b) Federal permittees should follow their own procedures for complying with the requirements of Section 106 of the National Historic Preservation Act. If pre-construction notification is required for the proposed NWP activity, the Federal permittee must provide the district engineer with the appropriate documentation to demonstrate compliance with those requirements. The district engineer will verify that the appropriate documentation has been submitted. If the appropriate documentation is not submitted, then additional consultation under section 106 may be necessary. The respective federal agency is responsible for fulfilling its obligation to comply with section 106.

(c) Non-federal permittees must submit a pre-construction notification to the district engineer if the NWP activity might have the potential to cause effects to any historic properties listed on, determined to be eligible for listing on, or potentially eligible for listing on the National Register of Historic Places, including previously unidentified properties. For such activities, the pre-construction notification must state which historic properties might have the potential to be affected by the proposed activity or include a vicinity map indicating the location of the historic properties or the potential for the presence of historic properties. Assistance regarding information on the location of or potential for the presence of historic properties can be sought from the State Historic Preservation Officer, Tribal Historic Preservation Officer, or designated tribal representative, as appropriate, and the National Register of Historic Places (see 33 CFR 330.4(g)). When reviewing pre-construction notifications, district engineers will comply with the current procedures for addressing the requirements of Section 106 of the National Historic Preservation Act. The district engineer shall make a reasonable and good faith effort to carry out appropriate identification efforts, which may include background research, consultation, oral history interviews, sample field investigation, and field survey. Based on the information submitted in the PCN and these identification efforts, the district engineer shall determine whether the proposed NWP activity has the potential to cause an effect on the historic properties. Section 106 consultation is not required when the district engineer determines that the activity does not have the potential to cause effects on historic properties (see 36 CFR 800.3(a)). Section 106 consultation is required when the district engineer determines that the activity has the potential to cause effects on historic properties. The district engineer will conduct consultation with consulting parties identified under 36 CFR 800.2(c) when he or she makes any of the following effect determinations for the purposes of section 106 of the NHPA: no historic properties affected, no adverse effect, and adverse effect. Where the non-Federal applicant has identified historic properties on which the activity might have the potential to cause effects and notified the Corps, the non-Federal applicant shall not begin the activity until notified by the district engineer either that the activity has no potential to cause effects to historic properties or that NHPA section 106 consultation has been completed.

(d) For non-federal permittees, the district engineer will notify the prospective permittee within 45 days of receipt of a complete pre-construction notification whether NHPA section 106 consultation is required. If NHPA section 106 consultation is required, the district engineer will notify the non-Federal applicant that he or she cannot begin the activity until Section 106 consultation is completed. If the non-Federal applicant has not heard back from the Corps within 45 days, the applicant must still wait for notification from the Corps.

(e) Prospective permittees should be aware that section 110k of the NHPA (54 U.S.C. 306113) prevents the Corps from granting a permit or other assistance to an applicant who, with intent to avoid the requirements of Section 106 of the NHPA, has intentionally significantly adversely affected a historic property to which the permit would relate, or having legal power to prevent it, allowed such significant adverse effect to occur, unless the Corps, after consultation with the Advisory Council on Historic Preservation (ACHP), determines that circumstances justify granting such assistance despite the adverse effect created or permitted by the applicant. If circumstances justify granting the assistance, the Corps is required to notify the ACHP and provide documentation specifying the circumstances, the degree of damage to the integrity of any historic properties affected, and proposed mitigation. This documentation must include any views obtained from the applicant, SHPO/THPO, appropriate Indian tribes if the undertaking occurs on or affects historic properties on tribal lands or affects properties of interest to those tribes, and other parties known to have a legitimate interest in the impacts to the activity on historic properties.

21. Discovery of Previously Unknown Remains and Artifacts. If you discover any previously unknown historic, cultural or archeological remains and artifacts while accomplishing the activity authorized by this permit, you must immediately notify the district engineer of what you have found, and to the maximum extent practicable, avoid construction activities that may affect the remains and artifacts until the required coordination has been completed. The district engineer will initiate the Federal, Tribal and state coordination required to determine if the items or remains warrant recovery effort or if the site is eligible for listing in the National Register of Historic Places.

22. Designated Critical Resource Waters. Critical resource waters include, NOAA-managed marine sanctuaries and marine monuments, and National Estuarine Research Reserves. The district engineer may designate, after notice and opportunity for public comment, additional waters officially designated by a state as having particular environmental or ecological significance, such as outstanding national resource waters or state natural heritage sites. The district engineer may also designate additional critical resource waters after notice and opportunity for public comment.

(a) Discharges of dredged or fill material into waters of the US are not authorized by NWPs 7, 12, 14, 16, 17, 21, 29, 31, 35, 39, 40, 42, 43, 44, 49, 50, 51, and 52 for any activity within, or directly affecting, critical resource waters, including wetlands adjacent to such waters.

(b) For NWPs 3, 8, 10, 13, 15, 18, 19, 22, 23, 25, 27, 28, 30, 33, 34, 36, 37, 38, and 54, notification is required in accordance with general condition 32, for any activity proposed in the designated critical resource waters including wetlands adjacent to those waters. The district engineer may authorize activities under these NWPs only after it is determined that the impacts to the critical resource waters will be no more than minimal.

23. Mitigation. The district engineer will consider the following factors when determining appropriate and practicable mitigation necessary to ensure that the individual and cumulative adverse environmental effects are no more than minimal:

(a) The activity must be designed and constructed to avoid and minimize adverse effects, both temporary and permanent, to waters of the United States to the maximum extent practicable at the project site (i.e., on site).

(b) Mitigation in all its forms (avoiding, minimizing, rectifying, reducing, or compensating for resource losses) will be required to the extent necessary to ensure that the individual and cumulative adverse environmental effects are no more than minimal.

(c) Compensatory mitigation at a minimum one-for-one ratio will be required for all wetland losses that exceed 1/10-acre and require pre-construction notification, unless the district engineer determines in writing that either some other form of mitigation would be more environmentally appropriate or the adverse effects of the proposed activity are minimal, and provides a project-specific waiver of this requirement. For wetland losses of 1/10-acre or less that require pre-construction notification, the district engineer may determine on a case-by-case basis that compensatory mitigation is required to ensure that the activity results in minimal adverse environmental effects.

(d) For losses of streams or other open waters that require pre-construction notification, the district engineer may require compensatory mitigation to ensure that the activity results in no more than minimal adverse environmental effects. Compensatory mitigation for losses of streams should be provided, if practicable, through stream rehabilitation, enhancement, or preservation, since streams are difficult-to-replace resources (see 33 CFR 332.3(e)(3)).

(e) Compensatory mitigation plans for NWP activities in or near streams or other open waters will normally include a requirement for the restoration or enhancement, maintenance, and legal protection (e.g. conservation easements) of riparian areas next to open waters. In some cases, the restoration or maintenance/protection of riparian areas may be the only compensatory mitigation required. Restored riparian areas should consist of native species. The width of the required riparian area will address documented water quality or aquatic habitat loss concerns. Normally, the riparian area will be 25 to 50 feet wide on each side of the stream, but the district engineer may require slightly wider riparian areas to address documented water quality or habitat loss concerns. If it is not possible to restore or maintain/protect a riparian area on the both sides of a stream or if the waterbody is a lake or coastal waters. Then restoring or maintaining/protecting a riparian area along a single bank or shoreline may be sufficient. Where both wetlands and open waters exist on the project site, the district engineer will determine the appropriate compensatory mitigation (e.g. riparian areas and/or wetlands compensation) based on what is best for the aquatic environmental on a watershed basis. In cases where riparian areas are determined to be the most appropriate form of minimization or compensatory mitigation, the district engineer may waive or reduce the requirement to provide wetland compensatory mitigation for wetland losses.

(f) Compensatory mitigation projects provided to offset losses of aquatic resources must comply with the applicable provisions of 33 CFR part 332.

(1) The prospective permittee is responsible for proposing an appropriate compensatory mitigation option if compensatory mitigation is necessary to ensure that the activity results in no more than minimal adverse environmental effects. For the NWPs, the preferred mechanism for providing compensatory mitigation is mitigation bank credits or in-lieu fee program credits (see 33 CFR 332.3(b)(2) and (3)). However, if an appropriate number and type of mitigation bank or in-lieu credits are not available at the time the PCN is submitted to the district engineer, the district engineer may approve the use of permittee-responsible mitigation if the use of mitigation bank or in-lieu fee program credits is not appropriate and practicable.

(2) The amount of compensatory mitigation required by the district engineer must be sufficient to ensure that the authorized activity results in no more than minimal individual and cumulative adverse environmental effects (see 33 CFR 330.1(e)(3)). (See also 33 CFR 332.3(f).)

(3) Since the likelihood of success is greater and the impacts to potentially valuable uplands are reduced, aquatic resource restoration should be the first compensatory mitigation option considered for permittee-responsible mitigation.

(4) If permittee-responsible mitigation is the proposed option, the prospective permittee is responsible for submitting a mitigation plan. A conceptual or detailed mitigation plan may be used by the district engineer to make the decision on the NWP verification request, but a final mitigation plan that addresses the applicable requirements of 33 CFR 332.4(c)(2) through (14) must be approved by the district engineer before the permittee begins work in waters of the United States, unless the district engineer determines that prior approval of the final mitigation plan is not practicable or not necessary to ensure timely completion of the required compensatory mitigation (see 33 CFR 332.3(k)(3)).

(5) If mitigation bank or in-lieu fee program credits are the proposed option, the mitigation plan only needs to address the baseline conditions at the impact site and the number of credits to be provided.

(6) Compensatory mitigation requirements (e.g., resource type and amount to be provided as compensatory mitigation, site protection, ecological performance standards, monitoring requirements) may be addressed through conditions added to the NWP authorization, instead of components of a compensatory mitigation plan.

(g) Compensatory mitigation will not be used to increase the acreage losses allowed by the acreage limits of the NWPs. For example, if an NWP has an acreage limit of 1/2-acre, it cannot be used to authorize any project resulting in the loss of greater than 1/2-acre of waters of the United States, even if compensatory mitigation is provided that replaces or restores some of the lost waters. However, compensatory mitigation can and should be used, as necessary, to ensure that an NWP activity already meeting the established acreage limits also satisfies the minimal impact requirement for the NWPs.

(h) Permittees may propose the use of mitigation banks, in-lieu fee programs, or separate permittee-responsible mitigation. When developing a compensatory mitigation proposal, the permittee must consider appropriate and practicable options consistent with the framework at 33 CFR 332.3(b). For activities resulting in the loss of marine or estuarine resources, permittee-responsible compensatory mitigation may be environmentally preferable if there are no mitigation banks or in-lieu fee programs in the area that have marine or estuarine credits available for sale or transfer to the permittee. For permittee-responsible mitigation, the special conditions of the NWP verification must clearly indicate the party or parties responsible for the implementation and performance of the compensatory mitigation project, and, if required, its long-term management.

(i) Where certain functions and services of waters of the United States are permanently adversely affected by a regulated activity, such as discharges of dredged or fill material into waters of the United States that will convert a forested or scrub-shrub wetland to a herbaceous wetland in a permanently maintained utility line right-of-way, mitigation may be required to reduce the adverse environmental effects of the activity to the no more than minimal level.

24. Safety of Impoundment Structures. To ensure that all impoundment structures are safely designed, the district engineer may require non-Federal applicants to demonstrate that the structures comply with established state dam safety criteria or have been designed by qualified persons. The district engineer may also require documentation that the design has been independently reviewed by similarly qualified persons, and appropriate modifications made to ensure safety.

25. Water Quality. Where States and authorized Tribes, or EPA where applicable, have not previously certified compliance of an NWP with CWA Section 401, individual 401 Water Quality

Certification must be obtained or waived (see 33 CFR 330.4(c)). The district engineer or State or Tribe may require additional water quality management measures to ensure that the authorized activity does not result in more than minimal degradation of water quality.

26. Coastal Zone Management. In coastal states where an NWP has not previously received a state coastal zone management consistency concurrence, an individual state coastal zone management consistency concurrence must be obtained, or a presumption of concurrence must occur (see 33 CFR 330.4(d)). The district engineer or a State may require additional measures to ensure that the authorized activity is consistent with state coastal zone management requirements.

27. Regional and Case-By-Case Conditions. The activity must comply with any regional conditions that may have been added by the Division Engineer (see 33 CFR 330.4(e)) and with any case specific conditions added by the Corps or by the state, Indian Tribe, or USEPA in its section 401 Water Quality Certification, or by the state in its Coastal Zone Management Act consistency determination.

28. Use of Multiple Nationwide Permits. The use of more than one NWP for a single and complete project is prohibited, except when the acreage loss of waters of the United States authorized by the NWPs does not exceed the acreage limit of the NWP with the highest specified acreage limit. For example, if a road crossing over tidal waters is constructed under NWP 14, with associated bank stabilization authorized by NWP 13, the maximum acreage loss of waters of the United States for the total project cannot exceed 1/3-acre.

29. Transfer of Nationwide Permit Verifications. If the permittee sells the property associated with a nationwide permit verification, the permittee may transfer the nationwide permit verification to the new owner by submitting a letter to the appropriate Corps district office to validate the transfer. A copy of the nationwide permit verification must be attached to the letter, and the letter must contain the following statement and signature: "When the structures or work authorized by this nationwide permit are still in existence at the time the property is transferred, the terms and conditions of this nationwide permit, including any special conditions, will continue to be binding on the new owner(s) of the property. To validate the transfer of this nationwide permit and the associated liabilities associated with compliance with its terms and conditions, have the transferee sign and date below."

_____

(Transferee)

_____

(Date)

30. Compliance Certification. Each permittee who receives an NWP verification letter from the Corps must provide a signed certification documenting completion of the authorized activity and implementation of any required compensatory mitigation. The success of any required permittee-responsible mitigation, including the achievement of ecological performance standards, will be addressed separately by the district engineer. The Corps will provide the permittee the certification document with the NWP verification letter. The certification document will include:

(a) A statement that the authorized work was done in accordance with the NWP authorization, including any general, regional, or activity-specific conditions;

(b) A statement that the implementation of any required compensatory mitigation was completed in accordance with the permit conditions. If credits from a mitigation bank or in-lieu fee program are used to satisfy the compensatory mitigation requirements, the certification must include the documentation required by 33 CFR 332.3(l)(3) to confirm that the permittee secured the appropriate number and resource type of credits; and

(c) The signature of the permittee certifying the completion of the work and mitigation. The completed certification document must be submitted to the district engineer within 30 days of completion of the authorized activity or the implementation of any required compensatory mitigation, whichever occurs later.

31. Activities Affecting Structures or Works Built by the United States. If an NWP activity also requires permission from the Corps pursuant to 33 U.S.C. 408 because it will alter or temporarily or permanently occupy or use a U.S. Army Corps of Engineers (USACE) federally authorized Civil Works project (a "USACE project"), the prospective permittee must submit a pre-construction notification. See paragraph (b)(10) of general condition 32. An activity that requires Section 408 permission is not authorized by the NWP until the appropriate Corps office issues the section 408 permission to altar, occupy, or use the USACE project, and the district engineer issues a written NWP verification.

32. Pre-Construction Notification (PCN). (a) Timing. Where required by the terms of the NWP, the prospective permittee must notify the district engineer by submitting a pre-construction notification (PCN) as early as possible. The district engineer must determine if the PCN is complete within 30 calendar days of the date of receipt and, if the PCN is determined to be incomplete, notify the prospective permittee within that 30 day period to request the additional information necessary to make the PCN complete. As a general rule, district engineers will request additional information necessary to make the PCN complete only once. However, if the prospective permittee does not provide all of the requested information, then the district engineer will notify the prospective permittee that the PCN is still incomplete and the PCN review process will not commence until all of the requested information has been received by the district engineer. The prospective permittee shall not begin the activity until either:

(1) He or she is notified in writing by the district engineer that the activity may proceed under the NWP with any special conditions imposed by the district or division engineer; or

(2) 45 calendar days have passed from the district engineer's receipt of the complete PCN and the prospective permittee has not received written notice from the district or division engineer. However, if the permittee was required to notify the Corps pursuant to general condition 18 that listed species or critical habitat might be affected or in the vicinity of the project, or to notify the Corps pursuant to general condition 20 that the activity might have the potential to cause effects to historic properties, the permittee cannot begin the activity until receiving written notification from the Corps that there is "no effect" on listed species or "no potential to cause effects" on historic properties, or that any consultation required under Section 7 of the Endangered Species Act (see 33 CFR 330.4(f)) and/or Section 106 of the National Historic Preservation (see 33 CFR 330.4(g)) has been completed. Also, work cannot begin under NWPs 21, 49, or 50 until the permittee has received written approval from the Corps. If the proposed activity requires a written waiver to exceed specified limits of an NWP, the permittee may not begin the activity until the district engineer issues the waiver. If the district or division engineer notifies the permittee in writing that an individual permit is required within 45 calendar days of receipt of a complete PCN, the permittee cannot begin the activity until an individual permit has been obtained. Subsequently, the permittee's right to proceed under the NWP may be modified, suspended, or revoked only in accordance with the procedure set forth in 33 CFR 330.5(d)(2).

(b) Contents of Pre-Construction Notification: The PCN must be in writing and include the following information:

(1) Name, address and telephone numbers of the prospective permittee;

(2) Location of the proposed activity;

(3) Identify the specific NWP or NWP(s) the prospective permittee wants to use to authorize the proposed activity;

(4) A description of the proposed activity; the activity's purpose; direct and indirect adverse environmental effects the activity would cause, including the anticipated amount of loss of wetlands, other special aquatic sites, and other waters expected to result from the NWP activity, in acres, linear feet, or other appropriate unit of measure; a description of any proposed mitigation measures intended to reduce the adverse environmental effects caused by the proposed activity; and any other NWP(s), regional general permit(s), or individual permit(s) used or intended to be used to authorize any part of the proposed project or any related activity, including other separate and distant crossings for linear projects that require Department of the Army authorization but do not require pre-construction notification. The description of the proposed activity and any proposed mitigation measures should be sufficiently detailed to allow the district engineer to determine that the adverse environmental effects of the activity will be no more than minimal and to determine the need for compensatory mitigation or other mitigation measures. For single and complete linear projects, the PCN must include the quantity of anticipated losses of wetlands, other special aquatic sites, and other water for each single and complete crossing of those wetlands, other special aquatic sites, and other waters. Sketches should be provided when necessary to show that the activity complies with the terms of the NWP. (Sketches usually clarify the project and when provided results in a quicker decision. Sketches should contain sufficient detail to provide an

illustrative description of the proposed activity (e.g., a conceptual plan), but do not need to be detailed engineering plans);

(5) The PCN must include a delineation of wetlands, other special aquatic sites, and other waters, such as lakes and ponds, and perennial, intermittent, and ephemeral streams, on the project site. Wetland delineations must be prepared in accordance with the current method required by the Corps. The permittee may ask the Corps to delineate the special aquatic sites and other waters on the project site, but there may be a delay if the Corps does the delineation, especially if the project site is large or contains many wetlands, other special aquatic sites, and other waters. Furthermore, the 45 day period will not start until the delineation has been submitted to or completed by the Corps, as appropriate;

(6) If the proposed activity will result in the loss of greater than 1/10-acre of wetlands and a PCN is required, the prospective permittee must submit a statement describing how the mitigation requirement will be satisfied, or explaining why the adverse environmental effects are no more than minimal and why compensatory mitigation should not be required. As an alternative, the prospective permittee may submit a conceptual or detailed mitigation plan.

(7) For non-federal permittees, if any listed species or designated critical habitat might be affected or is in the vicinity of the project, or if the project is located in designated critical habitat, for non-Federal applicants the PCN must include the name(s) of those endangered or threatened species that might be affected by the proposed activity or utilize the designated critical habitat that may be affected by the proposed activity. For any NWP activity that requires pre-construction notification, Federal permittees must provide documentation demonstrating compliance with the Endangered Species Act;

(8) For non-federal permittees, if the NWP activity might have the potential to cause effects to a historic property listed on, determined to be eligible for listing on, or potentially eligible for listing on, the National Register of Historic Places, the PCN must state which historic property might have the potential to be affected by the proposed activity or include a vicinity map indicating the location of the historic property. Federal permittees must provide documentation demonstrating compliance with Section 106 of the National Historic Preservation Act.

(9) For an activity that will occur in a component of the National Wild and Scenic River System, or in a river officially designated by Congress as a “study river” for possible inclusion in the system while the river is in an official study status, the PCN must identify the Wild and Scenic River or the “study river” (see general condition 16); and

(10) For an activity that requires permission from the Corps pursuant to 33 U.S.C. 408 because it will alter or temporarily or permanently occupy or use a U.S. Army Corps of Engineers federally authorized civil works project, the pre-construction notification must include a statement confirming that the project proponent has submitted a written request for section 408 permission from the Corps office having jurisdiction over that USACE project.

(c) Form of PCN Notification: The standard individual permit application form (Form ENG 4345) may be used, but the completed application form must clearly indicate that it is an NWP PCN and must include all of the information required in paragraphs (b)(1) through (10) of this general condition. A letter containing the required information may also be used. Applicants may provide electronic files of PCNs and supporting materials if the district engineer has established tools and procedures for electronic submittals.

(d) Agency Coordination: (1) The district engineer will consider any comments from Federal and state agencies concerning the proposed activity’s compliance with the terms and conditions of the NWPs and the need for mitigation to reduce the project’s adverse environmental effects so that they are no more than minimal.

(2) Agency coordination is required for: (i) all NWP activities that require preconstruction notification and result in the loss of greater than 1/2-acre of waters of the United States; (ii) NWP 21, 29, 39, 40, 42, 43, 44, 50, 51, and 52 activities that require pre-construction notification and will result in the loss of greater than 300 linear feet of stream bed; (iii) NWP 13 activities in excess of 500 linear feet, fills greater than one cubic yard per running foot, or involve discharges of dredged or fill material into special aquatic sites; and (iv) NWP 54 activities in excess of 500 linear feet, or that extend into the waterbody more than 30 feet from the mean low water line or ordinary high water mark.

(3) When agency coordination is required, the district engineer will immediately provide (e.g., via e-mail, facsimile transmission, overnight mail, or other expeditious manner) a copy of the complete PCN to the appropriate Federal or state offices (FWS, state natural resource or water quality agency, EPA, and, if appropriate, the NMFS). With the exception of NWP 37, these agencies will have 10 calendar days from the date the material is transmitted to notify the district engineer via telephone, facsimile transmission, or e-mail that they intend to provide substantive, sites pecific comments. The comments must explain why the agency believes the adverse environmental effects will be more than minimal. If so contacted by an agency, the district engineer will wait an additional 15 calendar days before making a decision on the pre-construction notification. The district engineer will fully consider agency comments received within the specified time frame concerning the proposed activity’s compliance with the terms and conditions of the NWPs, including the need for mitigation to ensure the net adverse environmental effects of the proposed activity are no more than minimal. The district engineer will provide no response to the resource agency, except as provided below. The district engineer will indicate in the administrative record associated with each pre-construction notification that the resource agencies’ concerns were considered. For NWP 37, the emergency watershed protection and rehabilitation activity may proceed immediately in cases where there is an unacceptable hazard to life or a significant loss of property or economic hardship will occur. The district engineer will consider any comments received to decide whether the NWP 37 authorization should be modified, suspended, or revoked in accordance with the procedures at 33 CFR 330.5.

(4) In cases of where the prospective permittee is not a Federal agency, the district engineer will provide a response to NMFS within 30 calendar days of receipt of any Essential Fish Habitat conservation recommendations, as required by Section 305(b)(4)(B) of the Magnuson-Stevens Fishery Conservation and Management Act.

(5) Applicants are encouraged to provide the Corps with either electronic files or multiple copies of PCN notifications to expedite agency coordination.

Further Information

1. District Engineers have authority to determine if an activity complies with the terms and conditions of an NWP.

2. NWPs do not obviate the need to obtain other federal, state, or local permits, approvals, or authorizations required by law.

3. NWPs do not grant any property rights or exclusive privileges.

4. NWPs do not authorize any injury to the property or rights of others.

5. NWPs do not authorize interference with any existing or proposed Federal project (see general condition 31).

IDEM Section 401 WQC General and Specific Conditions for 2017 Nationwide Permit 3

GENERAL CONDITIONS

The following conditions shall apply to any permittee whose project qualifies under any NWP approved by this certification. All activities that do not meet these conditions require an individual Water Quality Certification from the IDEM and are not authorized under this WQC.

(1) The permittee shall deposit any dredged material in a contained upland disposal area to prevent sediment run-off to any waterbody.

(2) The permittee shall install run-off and sediment control measures prior to any land disturbance to manage storm water and to minimize sediment from leaving the project site or entering a waterbody. All operations must phase project activities to minimize the impact of sediment to the receiving waterbody(ies). Erosion and sediment control measures shall be implemented using an appropriate order of construction (sequencing) relative to the land disturbing activities. Wetlands and/or waterbodies that are adjacent to land-disturbing activities must be protected with appropriate sediment control measures. As work progresses, all areas void of protective cover shall be re-vegetated or stabilized as described in the plan. Areas that are to be re-vegetated must utilize mulch that is anchored or, under more sever conditions, erosion control blankets. Erosion control blankets or other armament shall be used for all areas associated with concentrated flow. Standards and specifications for storm water management, including erosion and sediment control can be obtained in the Indiana Storm Water Quality Manual or similar guidance documents.

(3) The permittee shall allow the commissioner or an authorized representative of the commissioner (including an authorized contractor), upon the presentation of credentials to conduct the following activities:

- (a) enter upon the permittee's property;
- (b) have access to and copy at reasonable times any records that must be kept under the conditions of these permits or this certification;
- (c) inspect, at reasonable times, any monitoring or operational equipment or method; collection, treatment, pollution management or discharge facility or device; practices required by this certification; and any mitigation site; and
- (d) sample or monitor any discharge of pollutants or any mitigation site.

(4) This granting of WQC does not relieve the recipient of the certification from the responsibility of obtaining any other permits or authorizations that may be required for this project or related activities from IDEM or any other agency or person.

(5) This WQC does not:

- (a) authorize impacts or activities outside the scope of this certification;
- (b) authorize any injury to permittees or private property or invasion of other private rights, or any infringement of federal, state or local laws or regulations;
- (c) convey any property rights of any sort, or any exclusive privileges;
- (d) preempt any duty to obtain federal, state or local permits or authorizations required by law for the execution of the project or related activities; or
- (e) authorize changes in the plan design detailed in the application.

(6) This WQC does not authorize point source discharges of pollutants other than clean fill[1] and uncontaminated dredged material.

(7) This WQC does not authorize activities on or in any of the State's waters that have been designated as salmonid waters (cold water streams), tributaries of salmonid waters within a two river mile reach upstream from the confluence with the salmonid water, or Outstanding State and/or National Resource Waters *(see Attachment #1).*

(8) This WQC does not authorize activities on or in any critical wetland or critical special aquatic sites (*see Attachment #2*).

(9) The permittee must demonstrate, via letter from the Indiana Department of Natural Resources, Division of Nature Preserves, that no state endangered, threatened, or rare species are documented on a permanent or seasonal basis within a 1/2-mile radius of the proposed project site by the Indiana Natural Heritage Data Center, or must provide documentation from the Indiana Department of Natural Resources that states that the activities proposed will not constitute a violation of state laws protecting these species.

(10) This WQC does not authorize activities associated with the establishment of a mitigation bank.

(11) This WQC allows the use of multiple NWPs on the same project as long as the cumulative effect for the entire project is less than the specified impact thresholds identified in the approved NWP or as specified in this WQC. If a project

---

[1] Clean fill, for the purpose of this Water Quality Certification, means uncontaminated rocks, bricks, concrete without rebar road demolition waste materials other than asphalt, or earthen fill.

exceeds the specified impact thresholds, the activities are not authorized by this WQC and an individual WQC is required. The IDEM may certify several federal permits or licenses under one individual WQC.

(12) Upon request, the applicant will submit additional information necessary to IDEM to determine if a project will qualify under the terms and conditions of this certification. If the applicant fails to provide any information requested by IDEM, then the project is not authorized.

(13) All stream pump-around activities must be discharged in a manner that does not cause erosion at the outlet. Cofferdam dewatering activities must use filter bags, upland sediment basins/traps, or a combination of other appropriate sediment control measures to minimize the discharge of sediment-laden water into waters of the U.S. All sediment control measures must be installed and maintained in good working order. For stream pump-around activities, the in-stream material used to construct the dam must be constructed of non sediment producing sources. Examples include sand bags and sheet pile walls.

(14) The permittee must ensure all discharges of riprap into streams are flush with the upstream and downstream bank and stream channel elevations and grades.

(15) The activity will not result in a permanent secondary effect to waters of the U.S. (e.g., dredging, excavation, damming, creation of in-channel ponds) that when combined with the primary effect exceeds the area and length thresholds specified above.

(16) Notification to IDEM is required for any project authorized by a NWP for which the District Engineer has issued a waiver for intermittent and stream impacts greater than 300 feet. IDEM will review the notification within 30 days to determine whether or not IDEM will elevate the NWP to an Individual Water Quality Certification or authorize it as submitted.

(17) Notification to IDEM is required for any temporary impacts that exceed 0.1 acre for any proposed NWP. For emergency repair situations notification may take place after the emergency repair has begun.

(18) After construction, temporary fills must be removed in their entirety and the affected areas returned to the pre-construction elevations. The areas affected by temporary fills must be revegetated, as appropriate.

(19) The applicant will submit an application for an individual certification if IDEM determines the project would have more than minimal impacts to water quality, either viewed individually or collectively with other projects that may affect the same waterbody.

SPECIFIC CONDITIONS

* New and additional riprap has been removed from the 2017 NWP#3. Any project proposing new and additional riprap must receive authorization under an Individual Section 401 Water Quality Certification or the Indiana RGP#1.

The following conditions apply to NWP #3. All activities that do not meet these conditions require an individual WQC from the IDEM and are not authorized under this WQC.

1) For activities involving the replacement of a stream encapsulation:

a) The replacement must not reduce the cross-sectional area under bank full width;
b) The replacement must not increase the length of the total encapsulation to over 150 feet;
c) The replacement must have either the same slope as the existing encapsulation or will more closely match the slope of the stream[2] immediately upstream and downstream;
d) The type of encapsulation must be the same as the existing type of encapsulation;
e) Bank stabilization and channel bottom stabilization must not exceed either one bank full width upstream and downstream of the replacement encapsulation or ten linear feet, whichever is greater;
f) Any channel bottom stabilization is flush with the existing grade of the stream bottom; and
g) Existing encapsulations over 150 feet may be replaced under this NWP as long as the structure length does not change more than 20 feet upstream and 20 feet downstream.

(2) For activities involving the placement of thermal plastic liners or other liner types into existing structures:

(a) Liners may not be used to extend the structure length by more than 12-inches on either end of the structure;
(b) Liners must be installed so that the invert of the liner is as close to the invert of the host pipe as practical;
(c) Riprap scour protection or an energy dissipater must be installed flush with the upstream and downstream bank and stream channel elevations and grades;
(d) For projects undertaken by the Indiana Department of Transportation (INDOT) and a Local Public Agency (LPA), the project must be reviewed and approved by the INDOT Office of Hydraulics;
(e) The liner size must be the largest size approved by the INDOT Office of Hydraulics;
(f) For projects undertaken by permittees or entities other than INDOT or a LPA, a hydraulic modeling report must be submitted following the INDOT Standards and Specifications found at http://www.in.gov/indot/design_manual/design_manual_2013.htm;

[2] Stream, for the purpose of this Water Quality Certification, means Waters of the U.S. that have defined bed and bank and convey water ephemerally, intermittently, or perennially. This term includes natural streams, relocated streams, channelized streams, artificial channels,, encapsulated channels and ditches.

(g) If an existing culvert sump cannot be maintained by the installation of a liner then an individual Section 401 Water Quality Certification is required; and
(h) For perennial streams, the structure must not be in an elevated position (hanging culvert) within the stream channel. Hanging culverts in perennial stream channels require an Individual Section 401 Water Quality Certification.

3) For all other maintenance activities:
a) The activity must not permanently affect more than one-tenth (0.1) of an acre of waters of the United States;
b) The activity must not permanently change the sinuosity, flow path, velocity, cross sectional area under the bank full elevation or the slope of the stream;
c) The activity must not permanently affect more than 300 linear feet of stream channel, stream bank, or lake shoreline;
d) In the case of bank stabilization activities, the permittee must demonstrate that the bank or shoreline in question is unstable;
e) The activity must not result in a permanent secondary effect to Waters of the United States (e.g. dredging, excavation, damming, creation of in-channel ponds) that, when combined with the primary effect, exceeds the area and length thresholds specified above; and
f) Any channel bottom stabilization must be installed flush with the existing stream grade.

PAGE INTENTIONALLY LEFT BLANK

APPENDIX C

SMALL STRUCTURE # 21037 (BRIDGE # 311)
206TH STREET / FINLEY CREEK

PAGE INTENTIONALLY LEFT BLANK

CTL Engineering, Inc.
1310 S. Franklin Road
Indianapolis, Indiana 46239
Phone: (317) 295-8650 • Fax: (317) 295-8395
www.ctleng.com

Consulting *Engineers – Testing – Inspection Services – Analytical*

June 25, 2019

Infrastructure Engineering, Inc.
201 S Capitol Ave, Suite 490
Indianapolis, IN 46225

Attention: Mr. Nick Bergman, PE

Reference: Geotechnical Investigation
Small Structure Replacement
Hamilton Small Structure No. 21037
206th Street over Finley Creek; 1600' West of Lamong Road
Hamilton County, IN
CTL Project No.: 18050069IND

Dear Mr. Bergman:

CTL Engineering, Inc. has completed the geotechnical investigation on the above referenced site. Enclosed is an electronic copy of the report.

Thank you for the opportunity to be of service to you on this project. If you have any questions or need further information, please contact us at (317) 295-8650.

Sincerely,

CTL ENGINEERING, INC.

Ali Karaki

Ali Karaki, PE
Principal

GEOTECHNICAL INVESTIGATION

CULVERT REPLACEMENT
HAMILTON SMALL STRUCTURE NO. 21037
206TH STREET OVER FINLEY CREEK
HAMILTON COUNTY, IN
CTL PROJECT NO.: 18050069IND

PREPARED FOR:

INFRASTRUCTURE ENGINEERING, INC.
201 S CAPITOL AVE, SUITE 490
INDIANAPOLIS, IN 46225

PREPARED BY:

CTL ENGINEERING, INC.
1310 S. FRANKLIN ROAD
INDIANAPOLIS, INDIANA 46239

JUNE 25, 2019

CTL Engineering, Inc.
1310 S. Franklin Road
Indianapolis, Indiana 46239
Phone: (317) 295-8650 • Fax: (317) 295-8395
www.ctleng.com

Consulting *Engineers – Testing – Inspection Services – Analytical*

June 25, 2019

Infrastructure Engineering, Inc.
201 S Capitol Ave, Suite 490
Indianapolis, IN 46225

Attention: Mr. Nick Bergman, PE

Reference: Geotechnical Investigation
Small Structure Replacement
Hamilton Small Structure No. 21037
206th Street over Finley Creek; 1600' West of Lamong Road
Hamilton County, IN
CTL Project No.: 18050069IND

Dear Mr. Bergman:

In accordance with your authorization to proceed, CTL Engineering, Inc. has completed the geotechnical investigation on the above referenced site. The report includes the results of the field and laboratory testing and recommendations for the proposed structure replacement.

Thank you for the opportunity to be of service to you on this project. If you have any questions or need further information, please contact us at (317) 295-8650.

Sincerely,

CTL ENGINEERING, INC.

Ali Karaki

Ali Karaki, PE
Principal

TABLE OF CONTENTS

PAGE

I. PROJECT LOCATION AND DESCRIPTION 2
   A. Bridge 2
   B. Roadway 2
II. SUBSURFACE INVESTIGATION 2
III. FINDINGS 3
IV. DISCUSSION AND RECOMMENDATIONS 4
   A. Seismic Coefficients 4
   B. Bridge Foundation Support 4
   C. Embankments 7
   D. Pavement Considerations 8
   E. Site Preparation and Earthwork 10
V. CONCLUDING REMARKS 11

LIST OF TABLES

Table 1 - Groundwater Depths 4
Table 2 - GRS Design Parameters 6
Table 3 – Soil Parameters for Pavement Design 9

LIST OF APPENDICES

APPENDIX A GENERAL SITE PLAN
BORING LOCATION PLAN

APPENDIX B TEST BORING RECORDS

APPENDIX C LABORATORY TESTING

APPENDIX D SOIL PROFILE
SEISMIC COEFFICIENTS

APPENDIX E GRS ANALYSIS

APPENDIX F SPECIAL PROVISIONS FOR
MODIFIED SUBGRADE TREATMENT

I. PROJECT LOCATION AND DESCRIPTION

The project is located on 206th Street over Finley Creek, approximately 1600 feet west of Lamong Road in Hamilton County, Indiana. The project involves the replacement of the existing small structure No. 21037 (Bridge No. 311). A roadway approach work is expected on each of the bridge as summarized below.

A. Bridge

Bridge plans prepared by Infrastructure Engineering indicate that the existing structure will be replaced with a 40'-0" single span Prestressed Concrete Box Beam Structure with a clear roadway width of 33'-0". The bridge span is expected to be 33'-0" long with a clear roadway width of 32'-6". The proposed bridge is designed to be supported on a Geosynthetic Reinforced Soil (GRS) system as summarized below in Table 1. Construction of the GRS will require cut into the existing embankment up to 14± feet in height**.**

B. Roadway

The roadway improvement involves full depth pavement replacement on each side of the bridge beginning at Station 7+50 and ending at 15+50 Line A, approximately 760 feet in length. The new pavement will be constructed at or near the existing roadway grade. The projected AADT is 1,044 VPD for the year of 2039 with a 5% truck traffic.

II. SUBSURFACE INVESTIGATION

Two (2) structure test borings, designated TB-1 and TB-2, were drilled near the existing bridge bents to depths of 50.0 and 70.0 feet, respectively below the existing grade. Additionally, two (2) roadway borings labeled as RB-1 through RB-3 were drilled in the area of the roadway construction to a depth of 7.5 feet each below the existing grade. Stations and offsets of the test borings are shown on the attached Boring Location Plan in Appendix A and Test Boring Records in Appendix B.

The test borings were advanced with an ATV mounted drilling rig utilizing hollow stem augers (HSA) and Solid Flight Augers (SFA) on October 17th and 18th, 2018. Standard Penetration tests were conducted using a 140-pound automatic hammer falling 30 inches to drive a 2-inch O.D. split barrel sampler for 18 inches.

Soil samples obtained from the drilling operation were preserved in glass jars and visually classified in the field and laboratory. Representative soil samples were tested for Natural Moisture Content, pH, Unconfined Compressive Strength, Atterberg Limits and Grain Size Distribution. Undisturbed soil samples (Shelby Tubes) were obtained and tested for Unconfined Compressive Strength, Consolidation Testing, Unit Weight and Natural Moisture Content.

Drilling, soil sampling and laboratory testing were performed following standard geotechnical engineering practices and current AASHTO/ASTM procedures. Results from field tests are shown on the enclosed Test Boring Records in Appendix B and laboratory test sheets in Appendix C.

Locations and surface elevations of the test borings were interpolated from the site plans and cross-sections dated 4/15/19.

III. FINDINGS

The test borings encountered full depth hot mix asphalt (HMA) varying in thickness between 6.5 to 10.0 inches. Sand and gravel sub-base ranging in thickness of 3.5 to 20 inches was encountered below the pavement.

Below the pavement, the test borings encountered loam and clay loam of A-6 soil category to depths ranging between 13.5 feet to 21 feet. Test borings TB-1 and TB-2 encountered sandy loam, sand and silt of soil categories A-2-4 and A-4 below these upper soil layers to the terminus depth of the borings. Intermittent layers of fine heaving sands were encountered in the test borings.

Standard penetration blowcounts in the cohesive layers in the upper 21 feet ranged from 3 to 23 blows per foot (bpf) with moisture content values of 4 to 31 percent. Blowcounts in the lower lying soil layers ranged from 7 to 70 bpf with moisture content values of 9 to 17 percent.

Groundwater was recorded during the drilling operation as shown on the attached Test Boring Records in Appendix B and summarized below in Table 2. It should be noted that fluctuations in groundwater levels should be expected over time due to variations in precipitation and water levels of Finley Creek.

Table 1 - Groundwater Depths

Boring No.	Groundwater Depth (feet)			Cave-in Depth (feet)
	During Drilling	At Completion	At 24 Hours	
RB-1	Dry	Dry	Dry	7.4
RB-2	Dry	Dry	Dry	7.2
TB-1	15.0	11.9	Dry	25.0
TB-2	19.0	14.9	---	30.6

Detailed information of soil type, standard penetration value and groundwater elevations are shown in Appendix B, and appended Laboratory Test Results in Appendix C.

IV. DISCUSSION AND RECOMMENDATIONS

A. Seismic Coefficients

Based on the soil type, Standard Penetration Test (SPT) and/or average Undrained Shear Strength (S_u), the Site Class for the specific bridge is Class D in accordance with Table 3.10.3.1-1 of AASHTO LRFD Bridge Design Specifications 5th Edition. Using a Site Class D and a Peak Ground Acceleration Coefficient PGA = 0.065 results in an Acceleration Coefficient (S_{D1}) of 0.128. From Table 3.10.6-1, Seismic Zones, an Acceleration Coefficient of 0.128 indicates Seismic Zone 1. In accordance with INDOT Geotechnical Design Memorandum No. 2010-02, no liquefaction assessment is required because the site is determined to be in Seismic Zone 1.

B. Bridge Foundation Support

The proposed bridge will be supported on a Geosynthetic Reinforced Soil (GRS) abutment. The GRS consists of reinforced soil with CMU block facing (7-5/8 inches by 7-5/8 inches by 15-5/8 inches). The bottom of the GRS will be at about elevation 920.1 at Bent 1 and Bent 2. The GRS will be constructed over a 1.5-foot thick reinforced soil foundation (RSF) about 7.5 feet in width. The RSF is proposed to be at about elevation 918.6 and will extend about 1.5 feet in front of wall face. Generally, medium stiff to very stiff loam soils with interbedded san layers were encountered at or near the bottom RSF elevation. The GRS will be protected from scour with spill-through slopes constructed at 2:1 (H:V).

Table 2 below shows the design data provided by Infrastructure Engineering, Inc. and the design data extrapolated from FHWA publication No. FHWA-HRT-11-028 Geosynthetic Reinforced Soil Integrated Bridge System, Interim Implementation Guide. Also, Figure 1 below shows a typical section of GRS.

Based on the data provided in Table 2, the GRS meets the capacity demand ratio (CDR) requirements for direct sliding, bearing capacity and global stability following the guidelines stated in FHWA-HRT-11-026. Total settlements of the proposed fills for the GRS are estimated to be 1/-inch. Total settlement was calculated based on the loading of GRS fills and superstructure dead load using Boussinesq stress distribution. Based on the location and height of the proposed wall, the required equivalent uniform vertical stress (σ_v) is 6.1 ksf. The available factored bearing resistance is 8.6 ksf. External stability analyses are included in Appendix E. **Internal stability analysis was not performed. Internal stability shall be checked by the contractor/manufacturer.**

General recommendations for the GRS are provided in the following paragraphs.

1. The lowest level length of reinforcement should be no less than 6 feet for the bottom of the GRS. Then, the length of reinforcement should follow the cut slope up to a reinforcement length of 70% of the height of the wall; from there the reinforcement length can be increase in zones as illustrated below in example from FHWA Publication No. FHWA-HRT-11-026.

2. Reinforcement for the GRS shall be spaced at a maximum spacing of 12 inches.

3. Groundwater, surface runoff and/or seepage water is expected during construction of the RSF. In such an event, a dewatering system shall be submitted and implemented by the contractor and reviewed by the Engineer.

4. Borrow type and placement of the GRS should be in accordance with *Geosynthetic Reinforced Soil Integrated Bridge System Interim Implementation Guide* FHWA Publication No. FHWA-HRT-11-026.

5. Backfill materials required for subgrade and embankment construction shall be placed and compacted in accordance with ISS Section 211.

6. Temporary excavations more than 5.0 feet in depth should be sloped and/or shored according to OSHA requirements.

Table 2 - GRS Design Parameters

End Bent	Unit	Bent 1	Bent 2
Top Elevation of GRS	Feet	933.99	933.93
Bottom Elevation of GRS	Feet	920.16	920.07
Bridge Span from face to face of wall, L_{span}	Feet	37.0	37.0
Bridge Width with Skew, B_b	Feet	33.05	33.05
Bridge bearing width, b	Feet	5.0*	5.0*
Setback distance, a	Feet	0.667	0.667
Width over the GRS where road base DL acts, b_{rb}	Feet	0.7	0.7
Height of road base = height of bridge beam, h_{rb}	Feet	1.83	1.83
Bridge DL, Q_{DL}	kips	388.3	388.3
Bridge LL, Q_{LL}	kips	248.1	248.1
Estimated Abutment Height, H_{abut}	Feet	13.8	13.8
Clear Space, maximum of 3 inches or 2%H_{abut}	Feet	Included**	Included**
Wall Height, H	Feet	13.8	14.5
Width of RSF, B_{RSF}	Feet	7.5	7.5
Base Reinforcement Length, B_{total}	Feet	6.0	6.0
Height of RSF, D_{RSF}	Feet	1.50	1.50
Length of RSF in front of abutment wall face, x_{RSF}	Feet	1.50	1.50
Height/Width of the facing element, b_{block}	Feet	0.64	0.64
Base Length, B (without block)	Feet	5.4	5.4

* Bridge bearing width of 5.0 feet is recommended to target bearing pressure below the bridge seat to around 4000 psf.

** Included in H_{abut}

Figure 1 - Illustration. Typical GRS-IBS Cross Section
From FHWA-HRT-11-026

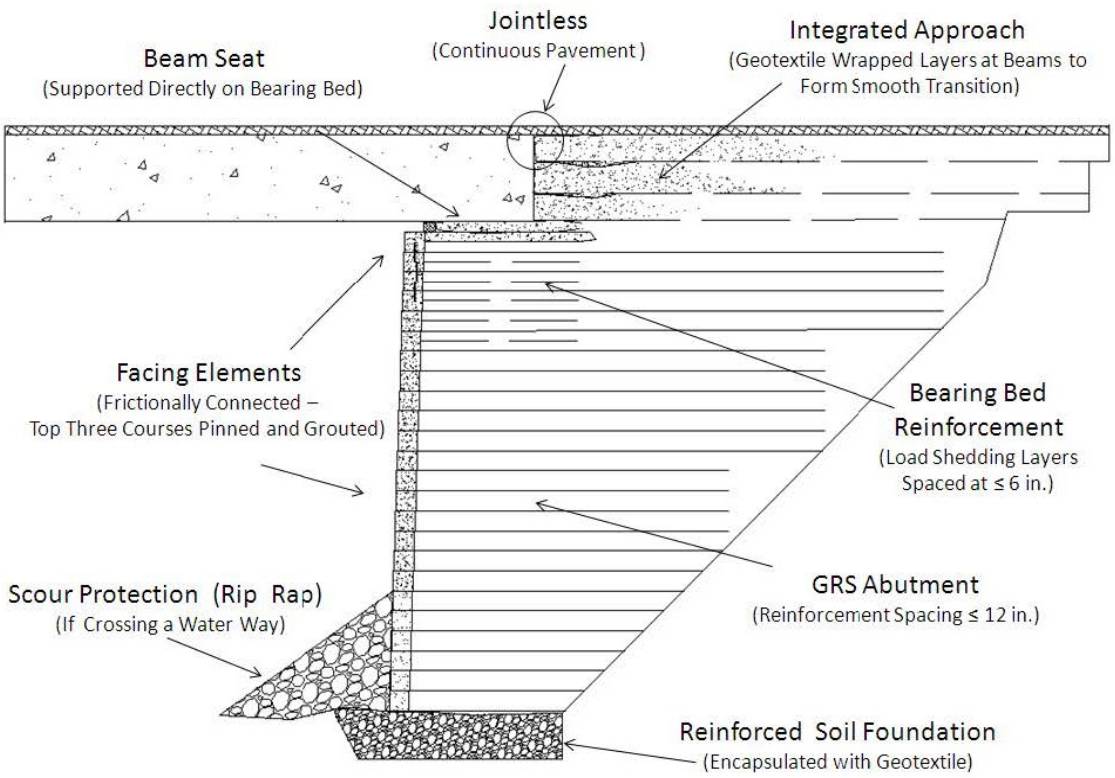

C. Embankments

Based on the current plans, embankment fills will be required in portions of the roadway reconstruction to establish the proposed grade. The plans indicate that the maximum fill height will be approximately 6.0 feet. Total settlement is estimated to be 3/4-inch under the new embankment fill. It is estimated that a waiting period of about 3 weeks shall be observed prior to placement of pavement. Recommendations for the placement of the new fills are provided in the following paragraphs.

1. Settlement of newly placed fill may vary across the roadway due to variations in soil void ratio and height of the proposed fill. It is estimated that settlements will be within tolerable limits of ½-inch if a period of 3 weeks is observed prior to placing material.

2. New embankment fill placed against existing embankments and slopes should be benched and compacted according to ISS. Soft and/or loose soils, wherever encountered beneath the proposed embankment fills, should be improved to meet proofrolling requirements.

3. Embankment side slopes should be constructed at a rate no steeper than 3:1 (Horizontal to Vertical). These slopes should be seeded and growth of vegetation permitted to limit soil erosion and sloughing.

4. Side ditches along the roadway sloping at a rate of 3% or steeper should be seeded and/or protected with riprap or other erosion protection.

5. Temporary excavations more than 5.0 feet in depth should be sloped and/or shored according to OSHA requirements.

D. Pavement Considerations

Based on the soil data obtained from the field and laboratory testing, the proposed roadway reconstruction may be designed using the soil parameters provided below in Table 3. In areas where full depth widening and/or pavement patching, the exposed foundation soils should be proofrolled in accordance with 203.26, where applicable. The modified subgrade treatment Type IC shall be in accordance with the special provisions included in Appendix F. The modified subgrade treatment Type IC shall be performed in accordance with ISS 207.04 except that the subgrade treatment shall be excavated to a depth of 12 inches and replaced with 9 inches of aggregate No. 53 over 3 inches of coarse aggregate No. 5 or No. 8. Air-cooled blast furnace slag shall not be used. A Geotextile in accordance with 918.02(c), Type 2 A shall be placed over the excavated area. Foundation improvement shall be at the discretion of the Engineer.

Table 3 – Soil Parameters for Pavement Design

Estimated Resilient Modulus (M_R) of Prepared Subgrade	8,500 psi
Resilient Modulus (M_R) of Natural Subgrade	3,000 psi
Predominant Soil Type	Clay Loam (A-6)
Percent Passing #200	55
% Silt	32
Liquid Limit (LL)	38
Plastic Limit (PL)	19
Plasticity Index (PI)	19
Depth to Water Table	Below 7.5’ from existing grade
Natural Density (pcf) of Natural Subgrade	120
% Moisture of Natural Subgrade	17
Organic Content	N/A
Marl Content	N/A
Sulfate Content	47 ppm
Rock Elevation	> 70 feet below existing grade
Filter Fabric Required for Underdrains	918.02 (b) Type 1B (NW)*
Subgrade Treatment	Type 1C Modified

* Underdrain Trench < 3 ft. deep.

E. Site Preparation and Earthwork

The following site preparation and earthwork along with INDOT Standard Specifications (ISS) should be implemented for the proposed roadway.

1. All surface objects, grass, vegetation, topsoil and roots, existing pavement located within the construction limits, should be cleared and grubbed in accordance with INDOT Standard Specification (ISS) Section 201.

2. Subsequent to removal of topsoil, the exposed subgrade should be proofrolled following INDOT Standard Specifications (ISS) procedures. Soft and/or loose soils not meeting the proofrolling requirements may be encountered in some locations, and hence will require aeration, disking or removal and replacement with approved fill.

3. During earthwork operations, care should be taken to provide adequate drainage on the exposed soils. Ditches must be kept open at all times, and the subgrade should be graded at the end of each day to facilitate good drainage.

4. Borrow material needed in fill areas may consist of approved fill material in accordance with ISS Section 211. Topsoil and/or organically contaminated materials are not acceptable for use as backfill.

5. The backfill should be placed and compacted in accordance with ISS Section 203. The engineered fill should not be placed in a frozen condition or over a frozen subgrade.

6. All subgrade soils and pavement materials should conform to the latest issue of INDOT Construction and Material Specifications.

7. Temporary excavations in excess of 5.0 feet in depth should be sloped, braced and/or shored according to OSHA requirements. Excavation to bottom of the recommended footing elevations may be accomplished using high powered excavation equipment. Temporary excavations/slopes up to 20 feet should be sloped at a rate no steeper than 1.5:1 (Horizontal to Vertical). Note that excavations left open and/or excavations exposed to rain may result in slope failures. All excavations should be monitored during construction by the contractor.

V. CONCLUDING REMARKS

The evaluations, conclusions, and recommendations in this report are based on our interpretation of the field and laboratory data obtained during the exploration, information available at the time of this report, our understanding of the project scope at the time of the report and our experience with similar sites and subsurface conditions using generally accepted geotechnical engineering practices. Although individual test borings are representative of the subsurface conditions at the boring locations on the dates drilled, they are not necessarily representative of the subsurface conditions between boring locations or subsurface conditions during other seasons of the year. If the scope of the project changes the recommendations may change and may require additional investigation.

During the design process, it is recommended that CTL work with the project designers to confirm that the geotechnical recommendations are properly incorporated into the final plans and specifications, and to assist with establishing criteria for the construction observation and testing. CTL is not responsible for independent conclusions, opinions and recommendations made by others based on the data and the recommendations provided in this report.

The report was prepared by CTL Engineering, Inc. (Consultant) solely for the use of the Client in accordance with an executed contract. The Client's use of or reliance on this report is limited by the terms and conditions of the contract and by the qualifications and limitations stated in the report. It is also acknowledged that the Client's use of and reliance of this report is limited for reasons which include: actual site conditions that may change with time; hidden conditions, not discoverable within the scope of the assessment, may exist at the site; and the scope of the investigation may have been limited by time, budget and other constraints imposed by the Client.

Neither the report, nor its contents, conclusions nor recommendations are intended for the use of any party other than the Client. Consultant and the Client assume no liability for any reliance placed on this report by such party. The rights of the Client under contract may not be assigned to any person or entity, without the consent of the Consultant which consent shall not be unreasonably withheld.

This geotechnical report does not address the environmental conditions of the site. The Consultant is not responsible for consequences or conditions arising from facts that were concealed, withheld, or not fully disclosed at the time the assessment was conducted.

To the fullest extent permitted by law, the Consultant and Client agree to indemnify and hold each other, and their officers and employees harmless from and against claims, damages, losses and expenses arising out of unknown or concealed conditions. Furthermore, neither the Consultant nor its employees shall be liable to the Owner in an amount in excess of the available professional liability insurance coverage of the Consultant. In addition, Client and Consultant agree neither shall be liable for any special, indirect or consequential damages of any kind or nature.

The Consultant's services have been provided consistent with its professional standard of care. No other warranties are made, either expressed or implied.

Sincerely,

CTL ENGINEERING, INC.

Ali Karaki, P.E.
Principal Engineer

ALI H. KARAKI
REGISTERED
PE60900551
STATE OF
INDIANA
PROFESSIONAL ENGINEER

Pawan Sigdel, PhD, EIT
Project Engineer

APPENDIX A

GENERAL SITE PLAN
BORING LOCATION PLAN

STRUCTURE	TYPE	SPAN AND SKEW	OVER	STATION
HAMILTON 311	COMPOSITE PRESTRESSED CONCRETE BOX BEAM BRIDGE	1 SPAN AT 40'-0" SKEW: 3º-00" RT.	FINLEY CREEK	11+90.0 Line "A"

HAMILTON COUNTY, INDIANA

REPLACEMENT PLAN FOR SMALL STRUCTURE NO. 21037 (BRIDGE NO. 311) 206th STREET OVER FINLEY CREEK WASHINGTON TOWNSHIP PROJECT NO.

TRAFFIC DATA

A.A.D.T.	(2019)	590 V.P.D.
A.A.D.T.	(2039)	1,044 V.P.D.
D.H.V	(2039)	63 V.P.H.
DIRECTIONAL DISTRIBUTION		50 %
TRUCKS		5 % A.A.D.T.
		5 % D.H.V.

DESIGN DATA

DESIGN SPEED	40 M.P.H.
PROJECT DESIGN CRITERIA	3R (NON-FREEWAY)
FUNCTIONAL CLASSIFICATION	PRIMARY ARTERIAL
RURAL/URBAN	RURAL
TERRAIN	LEVEL
ACCESS CONTROL	NONE

PLANS PREPARED BY:

INFRASTRUCTURE ENGINEERING | INCORPORATED
201 South Capitol Avenue | Suite 490 | Indianapolis, IN 46225
P 317.243.9800 | F 317.243.9100 | www.infrastructure-eng.com

CERTIFIED _____ DATE _____

PROJECT ENGINEER _____ DATE _____

PROJECT LOCATION
Begin Project Sta. 8+00 "A"
End Project Sta. 16+75"A"

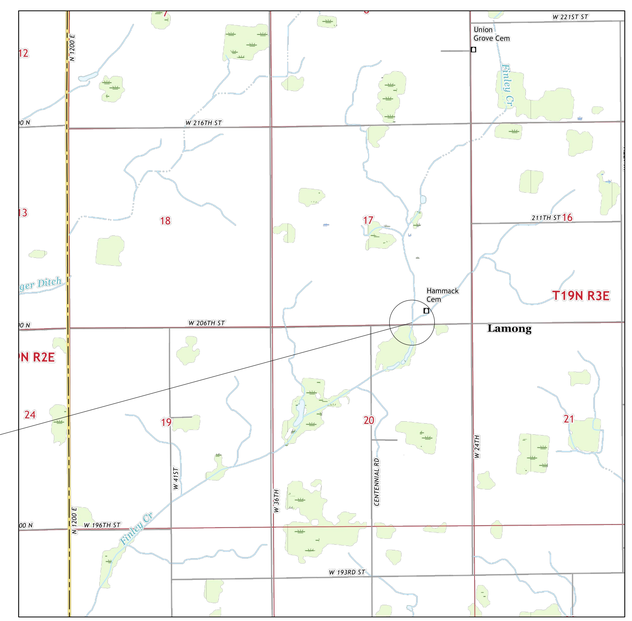

LOCATION MAP

SCALE: 1:24000

INDEX

SHEET NO.	SUBJECT
1	TITLE
2	TYPICAL SECTIONS
3	DETOUR ROUTE
4	PLAN AND PROFILE
5	SOIL BORINGS
6	GENERAL PLAN
7	SUMMARY TABLES
8-14	CROSS SECTIONS

INDIANA DEPARTMENT OF TRANSPORTATION
STANDARD SPECIFICATIONS DATED 2018
TO BE USED WITH THESE PLANS.

BRIDGE FILE
DESIGNATION

SURVEY BOOK	SHEETS
N/A	1 of 11
CONTRACT	PROJECT

Last Update: Apr 15, 2019 11:02am
Drawing name: Q:\P-18\3722-00 - 206th Street Finley Creek (Hamilton Co)\DWG\Sheets\3722 - Title.dwg

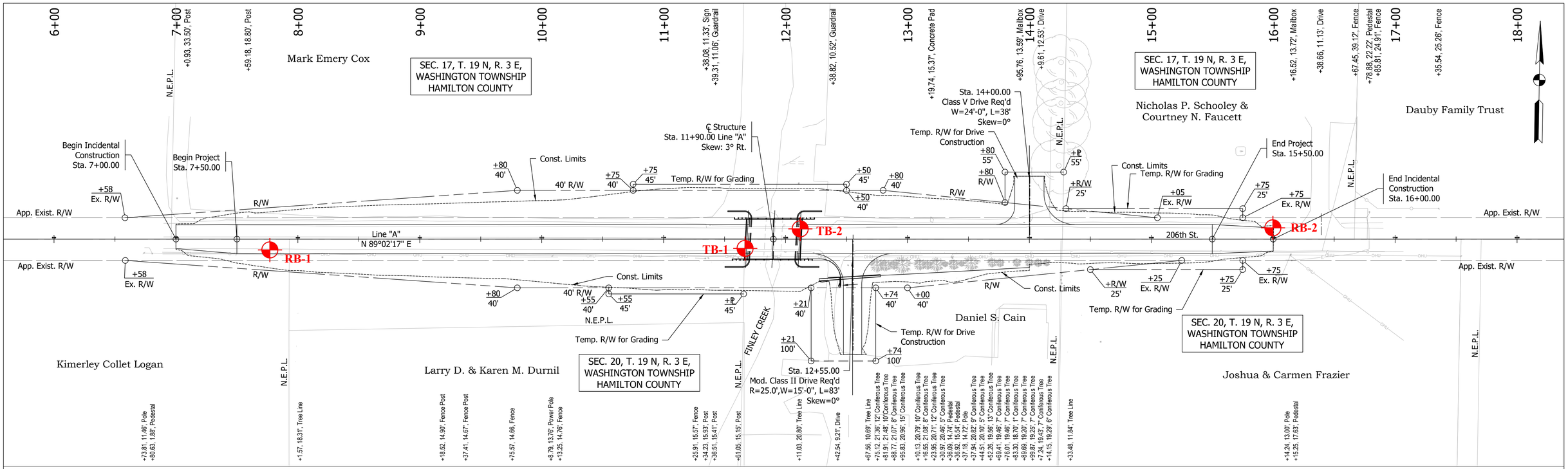

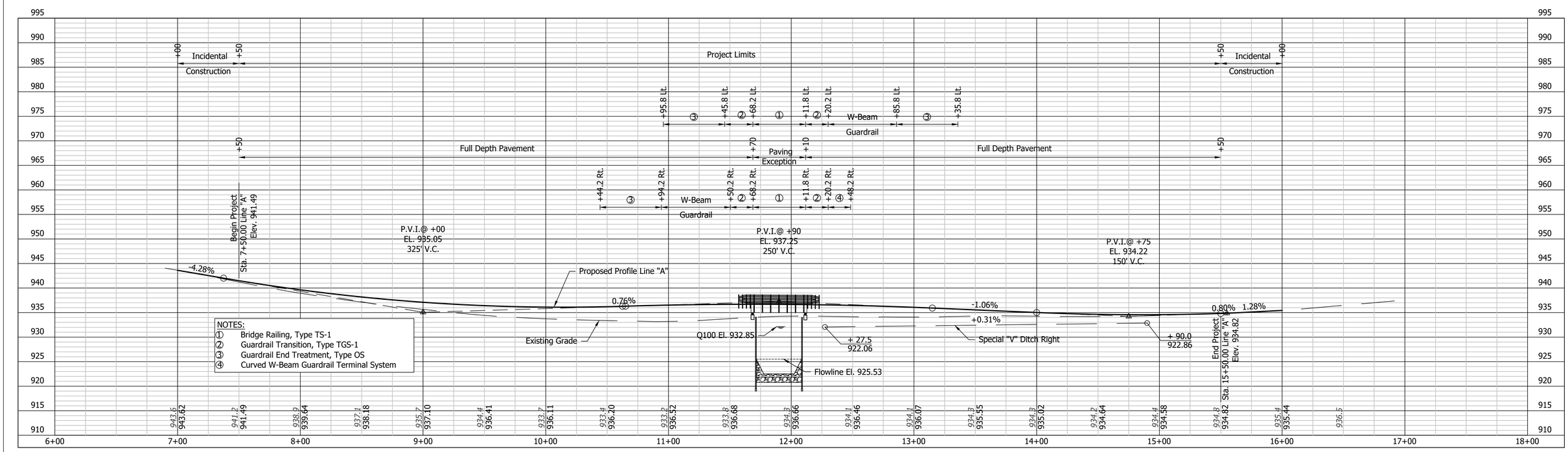

INFRASTRUCTURE ENGINEERING | INCORPORATED
201 South Capitol Avenue | Suite 400 | Indianapolis, IN 46225
P 317.243.9800 | F 317.243.9801 | www.infrastructure-eng.com

Last Update: Jun 21, 2019 - 1:34pm
Drawing name: Q:\P-18\3722-00 - 206th Street Finley Creek (Hamilton Co)\DWG\Sheets\3722 - Plan and Profile.dwg

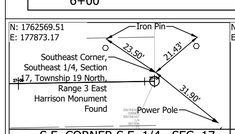

S.E. CORNER S.E. 1/4 , SEC. 17, T.19N, R.3E

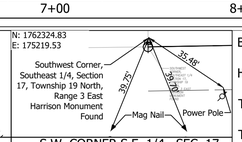

S.W. CORNER S.E. 1/4 , SEC. 17, T.19N, R.3E

BENCHMARK INFORMATION:

HCBR 215 - Hamilton County Geodetic Control Disk set near the North Corner of Structure Deck. Elev. = 940.15

TBM #1 - Mag Nail Set in North Side of Power Pole. Elev. = 936.447

TBM #2 - Mag Nail Set 28" Up from Ground in South Side of a 28" Cotton Wood Tree. Elev. = 931.90

NOT FOR CONSTRUCTION

RECOMMENDED FOR APPROVAL
DESIGN ENGINEER DATE

DESIGNED: EAS	01/2019	DRAWN: EAS	01/2019
CHECKED: NDB	01/2019	CHECKED: DTQ	01/2019

CITY OF INDIANAPOLIS
DEPARTMENT OF PUBLIC WORKS

PLAN AND PROFILE
LINE "A"

HORIZONTAL SCALE	BRIDGE FILE
1" = 40'	
VERTICAL SCALE	DESIGNATION
1" = 10'	
SURVEY BOOK	SHEET
	5 of X
CONTRACT	PROJECT

APPENDIX B

TEST BORING RECORDS

SOIL DESCRIPTION

NON-COHESIVE SOIL DESCRIPTION	STANDARD PENETRATION BLOWCOUNTS PER FOOT (BPF)
Very Loose	0 - 5
Loose	6 - 10
Medium Dense	11 - 30
Dense	31 - 50
Very Dense	Over 50

COHESIVE SOIL DESCRIPTION	STANDARD PENETRATION BLOWCOUNTS PER FOOT (BPF)
Very Soft	0 - 3
Soft	4 - 5
Medium Stiff	6 - 10
Stiff	11 - 15
Very Stiff	16 - 30
Hard	Over 30

GRADATION COMPONENT	SIZE
Boulders	Retained on 8"
Cobbles	Passing 8" Retained on 3"
Gravel	Passing 3" Retained on #10
Sand	Passing #10 Retained on #200
Silt	0.075 mm to 0.002 mm
Clay	Smaller than 0.002 mm

MOISTURE TERMS	DESCRIPTION
Dry	Powdery
Slightly Moist	Below Plastic Limit
Moist	Above Plastic, Below Liquid
Very Moist	At Liquid
Wet	Above Liquid

CTL ENGINEERING INC

TEST BORING RECORD

CLIENT : Infrastructure Engineering, Inc
PROJECT : Culvert Replacement
ROUTE NO. : 206th Street COUNTY : Hamilton
LOCATION : 206th Street over Finley Creek
DES NO. : --- PROJECT NO: ---

BORING NO. : **RB-1**
SHEET : 1 OF 1
DATE STARTED : 10-17-18
DATE COMPLETED : 10-18-18
CTL PROJECT NO : 18050069IND

Boring Elevation: 939.0 Feet
Northing : 1,762,364
Easting : 175,931
Datum : NAD 83, Indiana East

Boring Depth : 7.5 feet
Station : 7+90
Offset : 7.0 feet Rt
Line : "A"

Boring Method : SFA
Rig Type : CME-550 ATV
Casing Diameter : 4" O.D.
Core Size : ---

Hammer : Automatic
Hammer Efficiency 86.0
Driller/Inspector : JS/DW
Temperature : 55° F
Weather : Sunny

GROUNDWATER: Encountered at Dry At completion Dry Dry After 24 hours Caved in at 7.4 feet

Stratum Elevation	Sample Depth	SOIL/MATERIAL DESCRIPTION	Stratum Depth	Sample Number	SPT per 6"	SPT per 12" (N)	Recovery (%)	Moisture Content (%)	Total Unit Weight (pcf)	Unconfined Compression (ksf)	Atterberg Limits LL	PL	PI
938.2		**ASPHALT CONCRETE** (10") (Visual)	0.8										
936.8	2.5	**SAND AND GRAVEL BASE** (16") (Visual)	2.2	SS-1	14 10 13	23	100	9.9					
935.0		Brown, Moist, Very Stiff to Stiff, **LOAM** A-6 (4), Lab 1	4.0	SS-2	14 6 8	14	100	15.3			29	17	12
	5.0			SS-3	5 4 4	8	100	12.3			38	19	19
		Brown, Moist, Medium Stiff, **CLAY LOAM** A-6 (8), Lab 2		SS-4	5 4 6	10	100	13.0					
931.5	7.5	**Bottom of Boring at 7.5 feet**	7.5										
		Boring backfilled in accordance with INDOT requirements and pavement restored with concrete patch.											
	10.0												
	12.5												
	15.0												

CTL Engineering, Inc.
Phone: 317-295-8650

BORING METHOD	SAMPLING METHOD	ABBREVIATIONS
HSA - Hollow Stem Auger	SS - Split Spoon Sample	* - Hand Penetrometer
SFA - Solid Flight Auger	ST - Shelby Tube Sample	LL - Liquid Limit
RC - Rock Coring	CR - Rock Core Sample	PL - Plastic Limit
MD - Mud Drilling	BS - Bag Sample	PI - Plasticity Index
WD - Wash Drilling	AC - Auger Cuttings	SPT - Standard Penetration Test
HA - Hand Auger	SBS - Subbase Sample	

TEST BORING RECORD

CLIENT	: Infrastructure Engineering, Inc	BORING NO. :	**RB-2**
PROJECT	: Culvert Replacement	SHEET :	1 OF 1
ROUTE NO.	: 206th Street	COUNTY : Hamilton	DATE STARTED : 10-17-18
LOCATION	: 206th Street over Finley Creek		DATE COMPLETED : 10-18-18
DES NO.	: ---	PROJECT NO: ---	CTL PROJECT NO : 18050069IND

Boring Elevation: 935.0 Feet	Boring Depth : 7.5 feet	Boring Method : SFA	Hammer : Automatic
Northing : 1,762,367	Station : 16+00	Rig Type : CME-550 ATV	Hammer Efficiency 86.0
Easting : 176,735	Offset : 3.0 feet Lt	Casing Diameter : 4" O.D.	Driller/Inspector : JS/DW
Datum : NAD 83, Indiana East	Line : "A"	Core Size : ---	Temperature : 55° F
			Weather : Sunny

GROUNDWATER: Encountered at Dry; At completion Dry; Dry After 24 hours; Caved in at 7.2 feet

Stratum Elevation	Sample Depth	SOIL/MATERIAL DESCRIPTION	Stratum Depth	Sample Number	SPT per 6"	SPT per 12" (N)	Recovery (%)	Moisture Content (%)	Total Unit Weight (pcf)	Unconfined Compression (ksf)	Atterberg Limits LL	PL	PI
934.5		**ASPHALT CONCRETE** (6.5") (Visual)	0.5										
934.2		**SAND AND GRAVEL BASE** (3.5") (Visual)	0.8										
				SS-1	8 4 4	8	89	13.4					
	2.5												
		Brown, Moist, Medium Stiff to Very Soft, **CLAY LOAM** A-6, As Lab 2		SS-2	2 3 3	6	100	20.7					
	5.0			SS-3	2 2 1	3	100	15.6					
928.0			7.0	SS-4	3 4 4	8	100	14.8					
927.5	7.5	Brown, Wet, Loose, **SAND** (Visual)	7.5										
		Bottom of Boring at 7.5 feet											
		Boring backfilled in accordance with INDOT requirements and pavement restored with concrete patch.											
	10.0												
	12.5												
	15.0												

BORING METHOD	SAMPLING METHOD	ABBREVIATIONS
HSA - Hollow Stem Auger	SS - Split Spoon Sample	* - Hand Penetrometer
SFA - Solid Flight Auger	ST - Shelby Tube Sample	LL - Liquid Limit
RC - Rock Coring	CR - Rock Core Sample	PL - Plastic Limit
MD - Mud Drilling	BS - Bag Sample	PI - Plasticity Index
WD - Wash Drilling	AC - Auger Cuttings	SPT - Standard Penetration Test
HA - Hand Auger	SBS - Subbase Sample	

CTL Engineering, Inc.
Phone: 317-295-8650

TEST BORING RECORD

CLIENT	Infrastructure Engineering, Inc	BORING NO.	**TB-1**
PROJECT	Culvert Replacement	SHEET	1 OF 2
ROUTE NO.	206th Street	COUNTY: Hamilton	DATE STARTED: 10-17-18
LOCATION	206th Street over Finley Creek		DATE COMPLETED: 10-18-18
DES NO.	---	PROJECT NO: ---	CTL PROJECT NO: 18050069IND

Boring Elevation: 936.0 Feet	Boring Depth: 50.0 feet	Boring Method: HSA	Hammer: Automatic
Northing: 1,762,369	Station: 11+70	Rig Type: CME-550 ATV	Hammer Efficiency: 86.0
Easting: 176,304	Offset: 7.0 feet Rt	Casing Diameter: 3.25" I.D.	Driller/Inspector: JS/DW
Datum: NAD 83, Indiana East	Line: "A"	Core Size: ---	Temperature: 50° F
			Weather: Sunny

GROUNDWATER: Encountered at 15.0 feet; At completion 11.9 feet; 2.7 feet After 24 hours; Caved in at 25.0 feet

Stratum Elevation	Sample Depth	SOIL/MATERIAL DESCRIPTION	Stratum Depth	Sample Number	SPT per 6"	SPT per 12" (N)	Recovery (%)	Moisture Content (%)	Total Unit Weight (pcf)	Unconfined Compression (ksf)	Atterberg Limits LL	PL	PI
935.2		**ASPHALT CONCRETE** (10") (Visual)	0.8										
935.0		**SAND AND GRAVEL BASE** (4") (Visual)	1.0										
	2.5			SS-1	6 3 6	9	78	19.0					
	5.0			SS-2	5 3 6	9	56	30.8					
	7.5	Brown, Moist, Medium Stiff to Stiff, **CLAY LOAM** A-6, As Lab 2		SS-3	6 4 4	8	100	13.2	132.0	5.646 @ 11.1%			
	10.0			SS-4	9 6 6	12	100	11.8	105.5	5.094 @ 10.8%			
	12.5			SS-5	11 4 6	10	100	11.2					
922.5			13.5										
	15.0	Gray, Moist, Medium Stiff to Very Stiff, **LOAM** A-6, As Lab 1		SS-6	20 11 11	22	100	8.9					
920.0			16.0										
	17.5	Brown, Wet, Medium Dense, **SAND** with Traces of Clay in SS-7B (Visual)		SS-7	23 9 8	17	100	11.9					
917.5			18.5										
	20.0	Gray, Moist, Soft to Very Stiff, **CLAY LOAM** A-6, As Lab 2		SS-8	8 5 5	10	100	12.5					
915.0			21.0										
	22.5	Gray, Moist to Very Moist, Very Stiff to Hard, **SANDY LOAM** A-2-4 (0), Lab 4		SS-9	10 8 9	17	100	11.0					
	25.0			SS-10	10 15	31	100	13.5			18	13	5

Continued on next page

CTL Engineering, Inc.
Phone: 317-295-8650

BORING METHOD	SAMPLING METHOD	ABBREVIATIONS
HSA - Hollow Stem Auger	SS - Split Spoon Sample	* - Hand Penetrometer
SFA - Solid Flight Auger	ST - Shelby Tube Sample	LL - Liquid Limit
RC - Rock Coring	CR - Rock Core Sample	PL - Plastic Limit
MD - Mud Drilling	BS - Bag Sample	PI - Plasticity Index
WD - Wash Drilling	AC - Auger Cuttings	SPT - Standard Penetration Test
HA - Hand Auger	SBS - Subbase Sample	

TEST BORING RECORD

CLIENT : Infrastructure Engineering, Inc

BORING NO. : **TB-1**

PROJECT : Culvert Replacement

SHEET : 2 OF 2

Stratum Elevation	Sample Depth	SOIL/MATERIAL DESCRIPTION	Stratum Depth	Sample Number	SPT per 6"	SPT per 12" (N)	Recovery (%)	Moisture Content (%)	Total Unit Weight (pcf)	Unconfined Compression (ksf)	Atterberg Limits LL	PL	PI
		Gray, Moist to Very Moist, Very Stiff to Hard, **SANDY LOAM** A-2-4 (0), Lab 4			16								
	27.5												
907.5			28.5										
				SS-11	6 5 6	11	100	12.5					
	30.0												
	32.5	Gray, Moist to Very Moist, Stiff to Medium Stiff, **SANDY LOAM** Encountered heaving Sand at 35 feet and washed out with water during drilling A-4 (0), Lab 5											
				SS-12	0 2 5	7	100	16.6			18	13	5
	35.0												
	37.5												
897.0			39.0										
				SS-13	6 5 6	11	100	11.4					
	40.0	Gray, Wet to Very Moist, Medium Stiff to Stiff, **SILT** with Traces of Clay (Visual)											
	42.5												
892.5			43.5										
				SS-14	8 11 15	26	100	10.8	143.9	5.924 @ 11.0%			
	45.0												
	47.5	Gray, Moist, Medium Stiff to Very Stiff, **SANDY LOAM** A-4, As Lab 5											
				SS-15	15 19 37	56	39	11.9					
886.0	50.0		50.0										
		Bottom of Boring at 50.0 feet											
		Boring backfilled in accordance with INDOT requirements and pavement restored with concrete patch.											
	52.5												
	55.0												

CTL Engineering, Inc.
Phone: 317-295-8650

BORING METHOD	SAMPLING METHOD	ABBREVIATIONS
HSA - Hollow Stem Auger	SS - Split Spoon Sample	* - Hand Penetrometer
SFA - Solid Flight Auger	ST - Shelby Tube Sample	LL - Liquid Limit
RC - Rock Coring	CR - Rock Core Sample	PL - Plastic Limit
MD - Mud Drilling	BS - Bag Sample	PI - Plasticity Index
WD - Wash Drilling	AC - Auger Cuttings	SPT - Standard Penetration Test
HA - Hand Auger	SBS - Subbase Sample	

TEST BORING RECORD

CLIENT	: Infrastructure Engineering, Inc	BORING NO.	: **TB-2**
PROJECT	: Culvert Replacement	SHEET	: 1 OF 3
ROUTE NO.	: 206th Street COUNTY : Hamilton	DATE STARTED	: 10-18-18
LOCATION	: 206th Street over Finley Creek	DATE COMPLETED	: 10-18-18
DES NO.	: --- PROJECT NO: ---	CTL PROJECT NO	: 18050069IND

Boring Elevation: 936.0 Feet	Boring Depth : 70.0 feet	Boring Method : HSA	Hammer : Automatic
Northing : 1,762,366	Station : 12+10	Rig Type : CME-550 ATV	Hammer Efficiency 86.0
Easting : 176,333	Offset : 4.0 feet Lt	Casing Diameter : 3.25" I.D.	Driller/Inspector : JS/DW
Datum : NAD 83, Indiana East	Line : "A"	Core Size : ---	Temperature : 45° F
			Weather : Sunny

GROUNDWATER: Encountered at 19.0 feet At completion 14.9 feet --- After --- hours Caved in at 30.6 feet

Stratum Elevation	Sample Depth	SOIL/MATERIAL DESCRIPTION	Stratum Depth	Sample Number	SPT per 6"	SPT per 12" (N)	Recovery (%)	Moisture Content (%)	Total Unit Weight (pcf)	Unconfined Compression (ksf)	Atterberg Limits LL	PL	PI
935.2		**ASPHALT CONCRETE** (10") (Visual)	0.8										
933.5	2.5	**SAND AND GRAVEL BASE** (20") (Visual)	2.5	SS-1	16 14 8	22	100	4.3					
	5.0	Brown, Moist, Soft to Stiff, **CLAY LOAM** A-6, As Lab 2		SS-2	4 2 2	4	56	20.1					
	7.5			SS-3	4 5 6	11	100	10.9					
	10.0			SS-4	5 6 5	11	100	13.2					
				ST-1			100	10.8	144.4	5.909 @ 10.4%			
	12.5												
922.5			13.5										
	15.0	Brown and Gray, Moist, Medium Stiff to Very Stiff, **LOAM** A-4, As Lab 6		SS-5	4 5 5	10	100	8.9	144.3	6.566 @ 11.0%			
	17.5			ST-2			100						
917.5			18.5										
	20.0	Brown and Gray, Wet, Medium Dense, **SAND** (Visual)		SS-6	6 9 8	17	100	12.9					
	22.5												
912.5			23.5										
	25.0	Gray, Moist to Wet, Dense, **SILT** Heaving Sand and Gravel at 26 feet (Visual)		SS-7	9 16	39	100	17.4					

Continued on next page

CTL Engineering, Inc.
Phone: 317-295-8650

BORING METHOD	SAMPLING METHOD	ABBREVIATIONS
HSA - Hollow Stem Auger	SS - Split Spoon Sample	* - Hand Penetrometer
SFA - Solid Flight Auger	ST - Shelby Tube Sample	LL - Liquid Limit
RC - Rock Coring	CR - Rock Core Sample	PL - Plastic Limit
MD - Mud Drilling	BS - Bag Sample	PI - Plasticity Index
WD - Wash Drilling	AC - Auger Cuttings	SPT - Standard Penetration Test
HA - Hand Auger	SBS - Subbase Sample	

TEST BORING RECORD

CLIENT : Infrastructure Engineering, Inc
BORING NO. : **TB-2**
PROJECT : Culvert Replacement
SHEET : 2 OF 3

Stratum Elevation	Sample Depth	SOIL/MATERIAL DESCRIPTION	Stratum Depth	Sample Number	SPT per 6"	SPT per 12" (N)	Recovery (%)	Moisture Content (%)	Total Unit Weight (pcf)	Unconfined Compression (ksf)	Atterberg Limits LL	PL	PI
		Gray, Moist to Wet, Dense, **SILT** Heaving Sand and Gravel at 26 feet (Visual)			23								
	27.5												
907.0			29.0		10								
	30.0			SS-8	11	25	100	10.3			21	14	8
		Gray, Moist, Very Stiff, **LOAM (TILL)** A-4 (1), Lab 6			14								
904.0			32.0										
	32.5	Brown and Gray, Wet, Medium Dense, **SAND** (Visual)											
					6								
	35.0			SS-9	7	16	100	16.6					
					9								
	37.5												
					6								
	40.0			SS-10	8	14	100	11.0					
					6								
	42.5												
892.0			44.0		6								
	45.0			SS-11	9	22	100	9.4					
					13								
	47.5												
		Gray, Moist, Very Stiff to Hard, **LOAM (TILL)** with Traces of Sand in SS-12B			10								
	50.0			SS-12	16	37	89	11.5					
					21								
		Encountered Cobble in SS-15 A-4, As Lab 6											
	52.5												
					9								
	55.0			SS-13	11	24	100	11.0					
					13								

Continued on next page

CTL Engineering, Inc.
Phone: 317-295-8650

BORING METHOD	SAMPLING METHOD	ABBREVIATIONS
HSA - Hollow Stem Auger	SS - Split Spoon Sample	* - Hand Penetrometer
SFA - Solid Flight Auger	ST - Shelby Tube Sample	LL - Liquid Limit
RC - Rock Coring	CR - Rock Core Sample	PL - Plastic Limit
MD - Mud Drilling	BS - Bag Sample	PI - Plasticity Index
WD - Wash Drilling	AC - Auger Cuttings	SPT - Standard Penetration Test
HA - Hand Auger	SBS - Subbase Sample	

TEST BORING RECORD

CLIENT : Infrastructure Engineering, Inc

BORING NO. : **TB-2**

PROJECT : Culvert Replacement

SHEET : 3 OF 3

Stratum Elevation	Sample Depth	SOIL/MATERIAL DESCRIPTION	Stratum Depth	Sample Number	SPT per 6"	SPT per 12" (N)	Recovery (%)	Moisture Content (%)	Total Unit Weight (pcf)	Unconfined Compression (ksf)	Atterberg Limits LL	PL	PI
	57.5												
	60.0			SS-14	24 19 24	43	100	14.1					
	62.5	Gray, Moist, Very Stiff to Hard, **LOAM (TILL)** with Traces of Sand in SS-12B											
	65.0	Encountered Cobble in SS-15 A-4, As Lab 6		SS-15	28 32 30	62	33	14.1					
	67.5												
866.0	70.0		70.0	SS-16	38 32 38	70	22	14.1					
	72.5	**Bottom of Boring at 70.0 feet** Boring backfilled in accordance with INDOT requirements and pavement restored with concrete patch.											
	75.0												
	77.5												
	80.0												
	82.5												
	85.0												
	87.5												

CTL Engineering, Inc.
Phone: 317-295-8650

BORING METHOD	SAMPLING METHOD	ABBREVIATIONS
HSA - Hollow Stem Auger	SS - Split Spoon Sample	* - Hand Penetrometer
SFA - Solid Flight Auger	ST - Shelby Tube Sample	LL - Liquid Limit
RC - Rock Coring	CR - Rock Core Sample	PL - Plastic Limit
MD - Mud Drilling	BS - Bag Sample	PI - Plasticity Index
WD - Wash Drilling	AC - Auger Cuttings	SPT - Standard Penetration Test
HA - Hand Auger	SBS - Subbase Sample	

APPENDIX C

LABORATORY TESTING

Summary of Classification Test Results
Grain Size Distribution Curves
Unconfined Compressive Strength Test Results
Consolidation Test Results
Summary of Special Laboratory Test Results

Lab No.	Boring No.	Sample No.	Depth (feet)	Textural Classification	AASHTO Classification	Gravel %	Sand %	Silt %	Clay %	Liquid Limit (LL)	Plastic Limit (PL)	Plasticity Index (PI)	Moisture %
Lab 1	RB-1	SS-2	2.5-4.0	LOAM	A-6 (4)	5.8	38.8	38.1	17.2	28.8	17.0	11.8	15.3
Lab 2	RB-1	SS-3	4.0-5.5	CLAY LOAM	A-6 (8)	7.5	36.8	32.1	23.6	37.8	18.6	19.2	12.3
Lab 4	TB-1	SS-10	23.5-25.0	SANDY LOAM	A-2-4 (0)	22.1	43.9	24.0	10.0	18.1	13.0	5.1	13.5
Lab 5	TB-1	SS-12	33.5-35.0	SANDY LOAM	A-4 (0)	11.1	52.7	21.7	14.5	17.6	12.6	5.0	16.6
Lab 6	TB-2	SS-8	28.5-30.0	LOAM	A-4 (1)	9.8	35.3	38.8	16.1	21.3	13.6	7.7	10.3

CTL Engineering, Inc.
Phone: 317-295-8650

SUMMARY OF CLASSIFICATION TEST RESULTS

Des. No. : ---
Project Type : Culvert Replacement
Route : 206th Street
Location : 206th Street over Finley Creek

Project No. : ---
County : Hamilton
CTL Proj. No. : 18050069IND

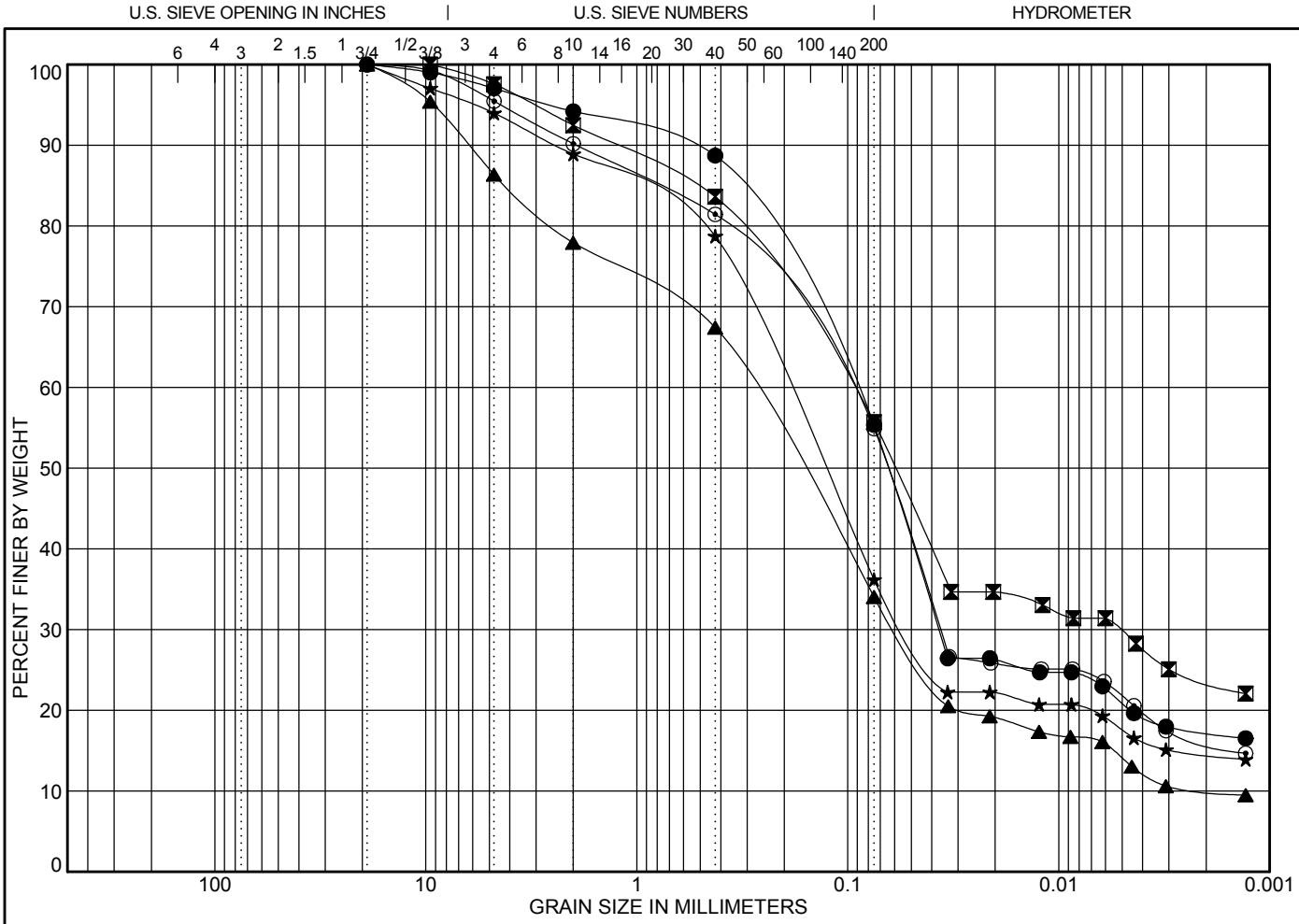

Cobbles	Gravel	Sand	Silt	Clay

Boring No.	RB-1	RB-1	TB-1	TB-1	TB-2
Sample	SS-2	SS-3	SS-10	SS-12	SS-8
Depth	2.5-4.0	4.0-5.5	23.5-25.0	33.5-35.0	28.5-30.0
Station	7+90	7+90	11+70	11+70	12+10
Offset	7.0 feet Rt	7.0 feet Rt	7.0 feet Rt	7.0 feet Rt	4.0 feet Lt
Line	'A'	'A'	'A'	'A'	'A'
Curve Designation	●	⊠	▲	★	⊙
Moisture Content	**15.3**	**12.3**	**13.5**	**16.6**	**10.3**
Liquid Limit	**28.8**	**37.8**	**18.1**	**17.6**	**21.3**
Plastic Limit	**17.0**	**18.6**	**13.0**	**12.6**	**13.6**
Plasticity Index	**11.8**	**19.2**	**5.1**	**5.0**	**7.7**
% Gravel	**5.8**	**7.5**	**22.1**	**11.1**	**9.8**
% Sand	**38.8**	**36.8**	**43.9**	**52.7**	**35.3**
% Silt	**38.2**	**32.1**	**24.0**	**21.7**	**38.8**
% Clay	**17.2**	**23.6**	**10.0**	**14.5**	**16.1**
Classification	**LOAM**	**CLAY LOAM**	**SANDY LOAM**	**SANDY LOAM**	**LOAM**
AASHTO Group	**A-6 (4)**	**A-6 (8)**	**A-2-4 (0)**	**A-4 (0)**	**A-4 (1)**
Lab No.	**Lab 1**	**Lab 2**	**Lab 4**	**Lab 5**	**Lab 6**

CTL ENGINEERING
CTL Engineering, Inc.
Phone: 317-295-8650

GRAIN SIZE DISTRIBUTION

Client : Infrastructure Engineering, Inc
Route : 206th Street
Location : 206th Street over Finley Creek
Des No. : ---
County : Hamilton

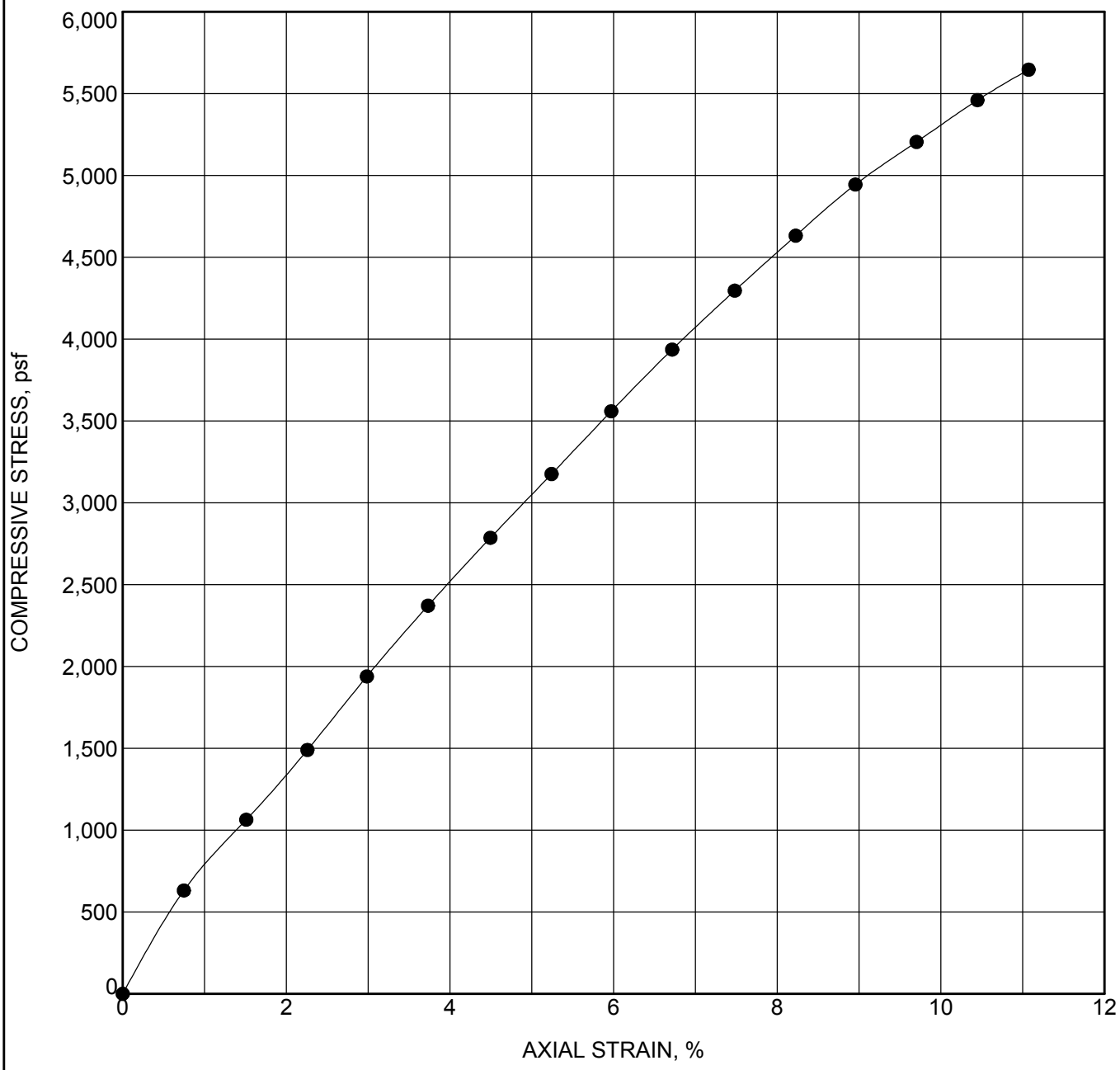

Boring No.	Sample No.	Depth	Classification
TB-1	**SS-3**	**6.0 - 7.5**	**Clay Loam**

Moisture Content (%)	Wet Density (pcf)	Dry Density (pcf)	Unconfined Strength (psf)	Strain Rate (%)	Failure Strain (%)
13.2	**132.0**	**116.6**	**5646**	**0.9**	**11.1**
Shear Strength (psf)	Saturation (%)	Void Ratio	Specimen Diameter (mm)	Specimen Height (mm)	Height/Diameter Ratio
2823	**80**	**0.446**	**34.2**	**85.3**	**2.5**

CTL Engineering, Inc.
Phone: 317-295-8650

UNCONFINED COMPRESSIVE STRENGTH TEST

Des. No. : ---
Project No. : ---
Route : 206th Street
County : Hamilton
Location : 206th Street over Finley Creek

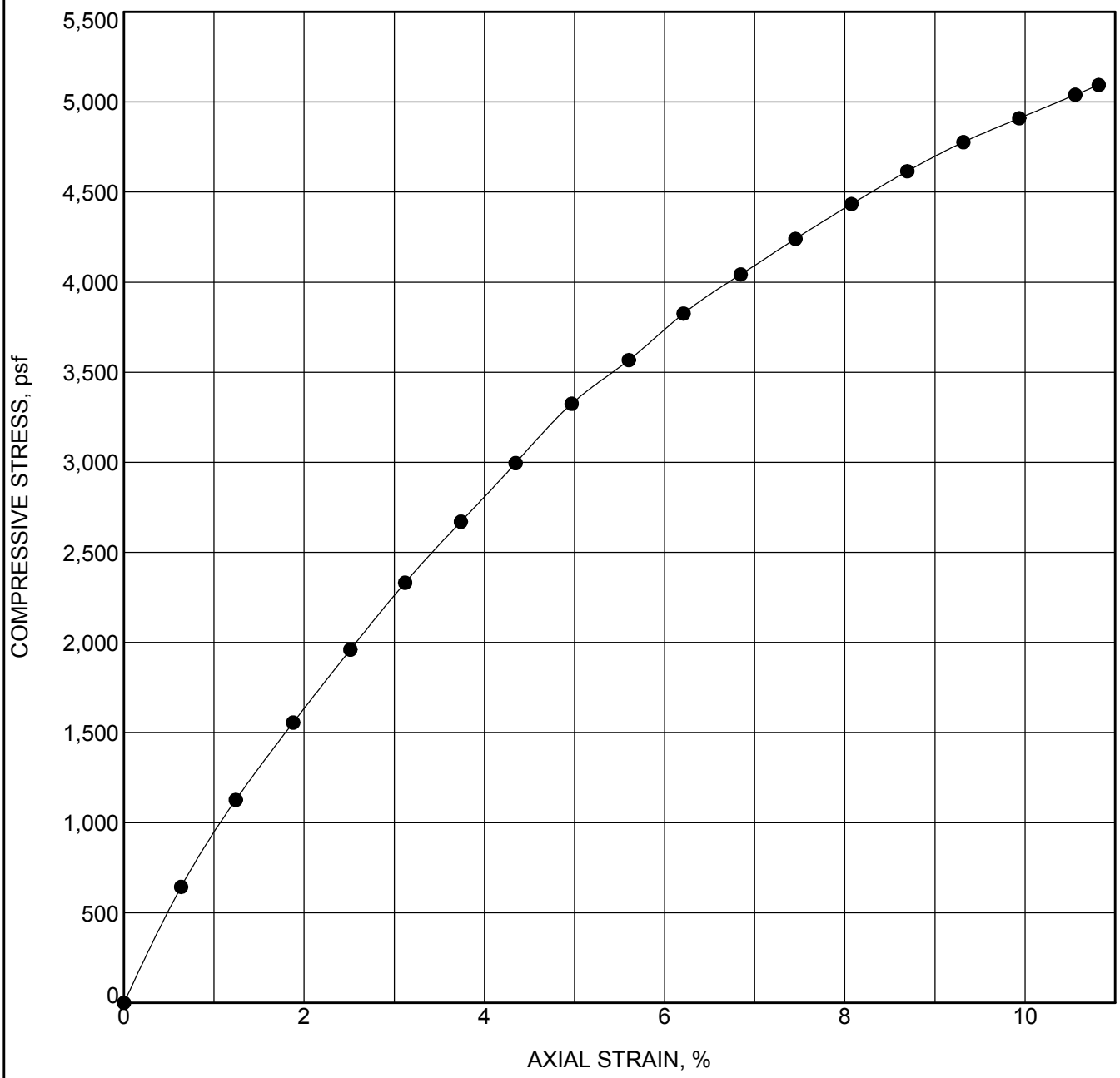

Boring No.	Sample No.	Depth	Classification
TB-1	**SS-4**	**8.5 - 10.0**	**Clay Loam**

Moisture Content (%)	Wet Density (pcf)	Dry Density (pcf)	Unconfined Strength (psf)	Strain Rate (%)	Failure Strain (%)
11.8	**105.5**	**94.4**	**5094**	**0.7**	**10.8**
Shear Strength (psf)	Saturation (%)	Void Ratio	Specimen Diameter (mm)	Specimen Height (mm)	Height/Diameter Ratio
2547	**41**	**0.785**	**35.0**	**102.5**	**2.9**

CTL Engineering, Inc.
Phone: 317-295-8650

UNCONFINED COMPRESSIVE STRENGTH TEST

Des. No. : ---
Project No. : ---
Route : 206th Street
County : Hamilton
Location : 206th Street over Finley Creek

INDOT_UNCONFINED_SO_NE_RP 18050069IND.GPJ US_LAB.GDT 6/25/19

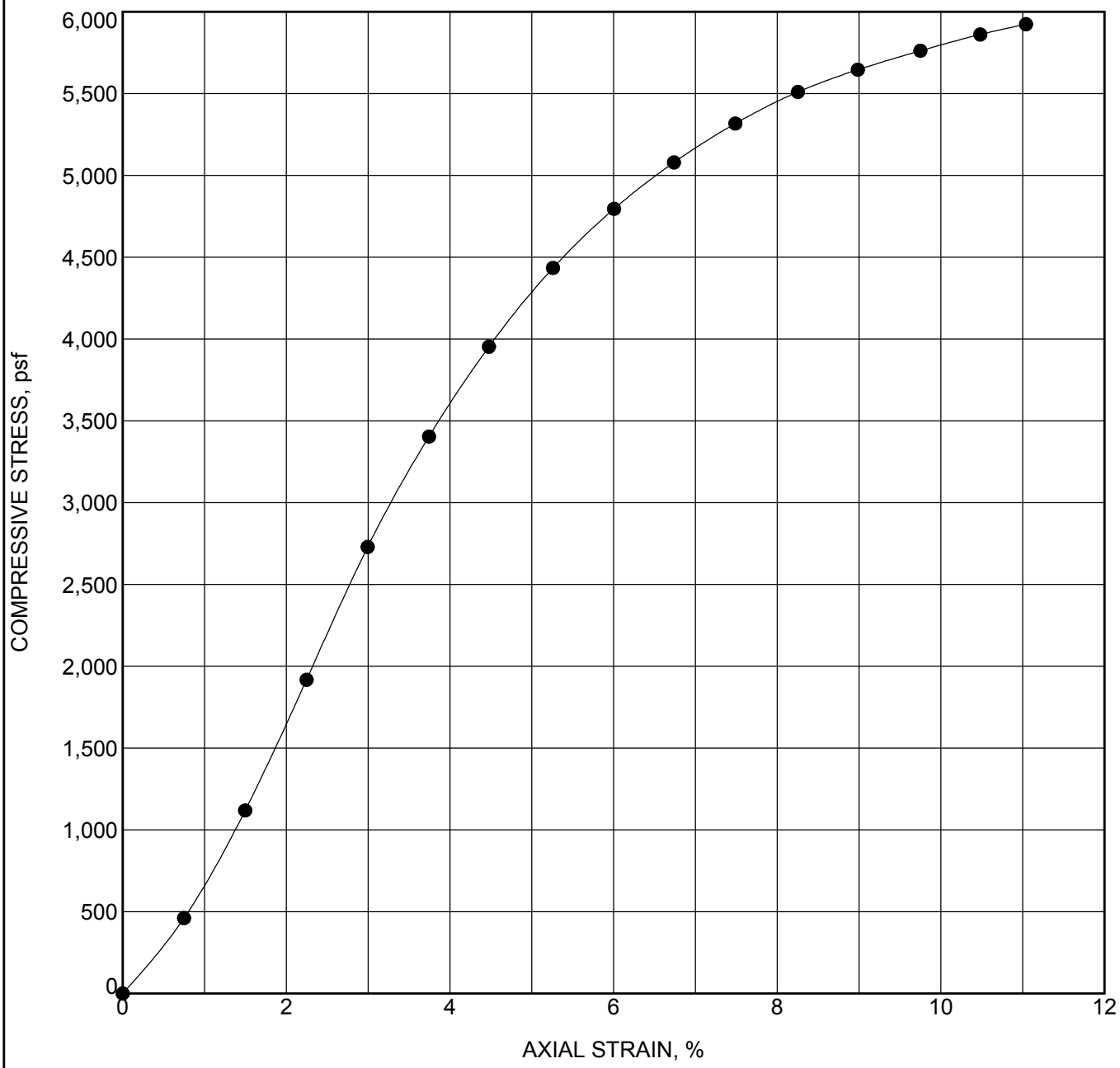

Boring No.	Sample No.	Depth	Classification
TB-1	**SS-14**	**43.5 - 45.0**	**Sandy Loam**

Moisture Content (%)	Wet Density (pcf)	Dry Density (pcf)	Unconfined Strength (psf)	Strain Rate (%)	Failure Strain (%)
10.8	**143.9**	**129.9**	**5924**	**0.9**	**11.0**
Shear Strength (psf)	Saturation (%)	Void Ratio	Specimen Diameter (mm)	Specimen Height (mm)	Height/Diameter Ratio
2962	**98**	**0.297**	**37.1**	**85.0**	**2.3**

CTL Engineering, Inc.
Phone: 317-295-8650

UNCONFINED COMPRESSIVE STRENGTH TEST

Des. No. : ---
Project No. : ---
Route : 206th Street
County : Hamilton
Location : 206th Street over Finley Creek

INDOT_UNCONFINED_SO_NE_RP 18050069IND.GPJ US_LAB.GDT 6/25/19

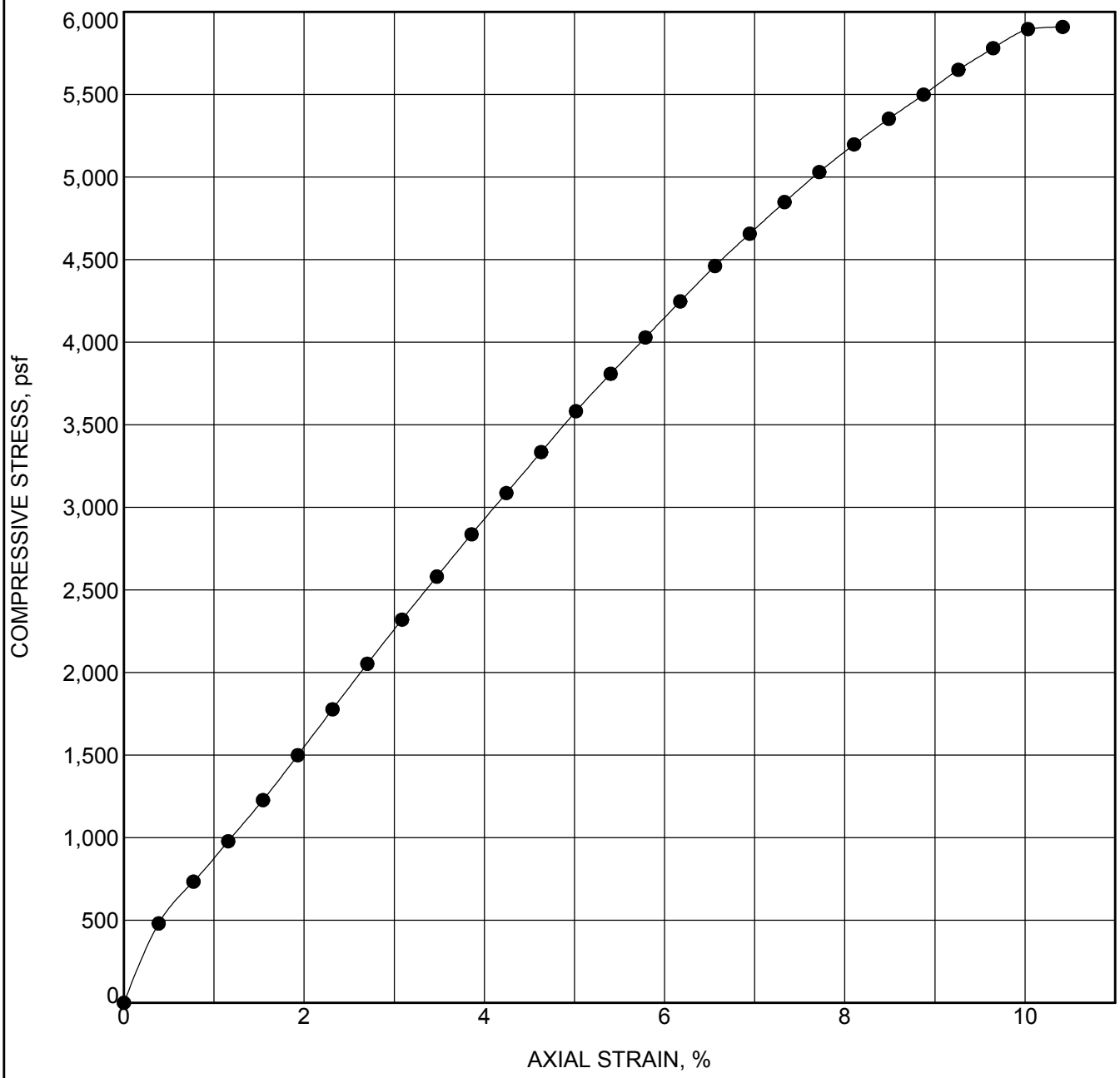

Boring No.	Sample No.	Depth	Classification
TB-2	**ST-1**	**10.0 - 12.0**	**Clay Loam**

Moisture Content (%)	Wet Density (pcf)	Dry Density (pcf)	Unconfined Strength (psf)	Strain Rate (%)	Failure Strain (%)
10.8	**144.4**	**130.4**	**5909**	**0.5**	**10.4**
Shear Strength (psf)	Saturation (%)	Void Ratio	Specimen Diameter (mm)	Specimen Height (mm)	Height/Diameter Ratio
2954	**99**	**0.292**	**72.4**	**164.6**	**2.3**

CTL Engineering, Inc.
Phone: 317-295-8650

UNCONFINED COMPRESSIVE STRENGTH TEST

Des. No. : ---
Project No. : ---
Route : 206th Street
County : Hamilton
Location : 206th Street over Finley Creek

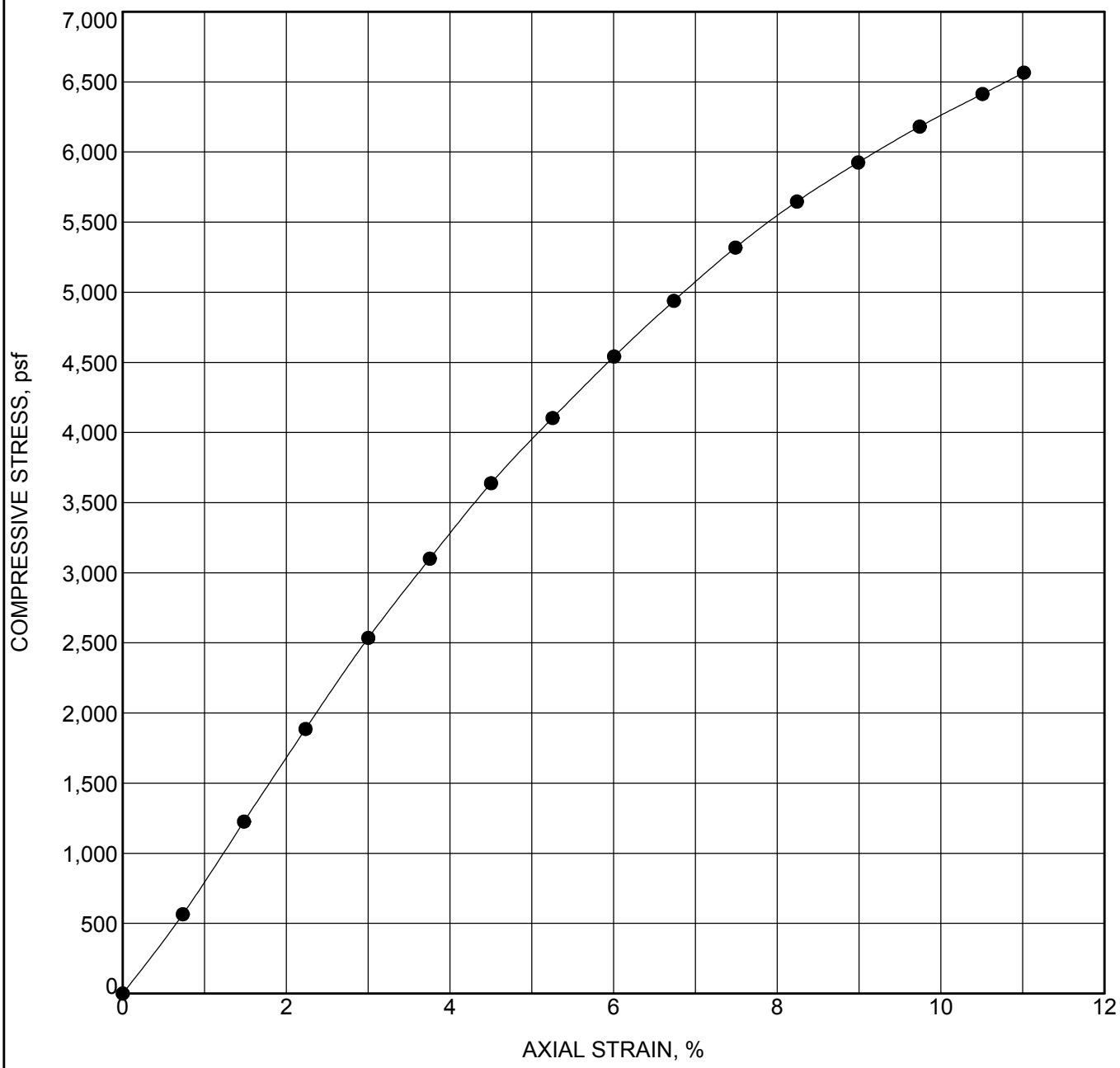

Boring No.	Sample No.	Depth	Classification
TB-2	**SS-5**	**13.5 - 15.0**	**Loam**

Moisture Content (%)	Wet Density (pcf)	Dry Density (pcf)	Unconfined Strength (psf)	Strain Rate (%)	Failure Strain (%)
8.9	**144.3**	**132.5**	**6566**	**0.9**	**11.0**
Shear Strength (psf)	Saturation (%)	Void Ratio	Specimen Diameter (mm)	Specimen Height (mm)	Height/Diameter Ratio
3283	**88**	**0.272**	**35.0**	**84.8**	**2.4**

CTL Engineering, Inc.
Phone: 317-295-8650

UNCONFINED COMPRESSIVE STRENGTH TEST

Des. No. : ---
Project No. : ---
Route : 206th Street
County : Hamilton
Location : 206th Street over Finley Creek

Unconfined Compression Test Results ASTM D 2166, D 5102	CTL ENGINEERING, INC. 2860 Fisher Road Columbus, Ohio 43204

Sample ID: TB-2, ST-5, 16'-18'

Avg. Sample Height (in.): 5.77
Avg. Sample Diameter (in.): 2.88
Height-to-diameter ratio: 2.01
Ultimate Strength (ksf): 1.98
Shear Strength (Ksf): 0.99
Avg. Rate of Strain to Failure(%): 3.16
Strain at Failure (%): 14.80
Initial Dry Density (pcf): 133.99
Moisture Content (%): 10.2 (Obtained Post Shear)
Visual Description: Gray, Silty, Clayey Sand (SC-SM)
Degree of Saturation: NA
Sensitivity: NA
Failure Type: Diagonal Shear

Client: Infrastructure Engineering Inc.
Project: Hamilton Small Structure No 21037
Location: 206th Street over Finley Creek
Project No. 18050069IND
Lab Code No. 18050806COL
Date Tested: 11/8/2018
Reviewed by: SM

ASTM D 4318
LL: 16
PL: 12

ASTM D 6913
Gravel (%): 9
Sand(%): 46
Silt(%): 36
Clay(%): 9

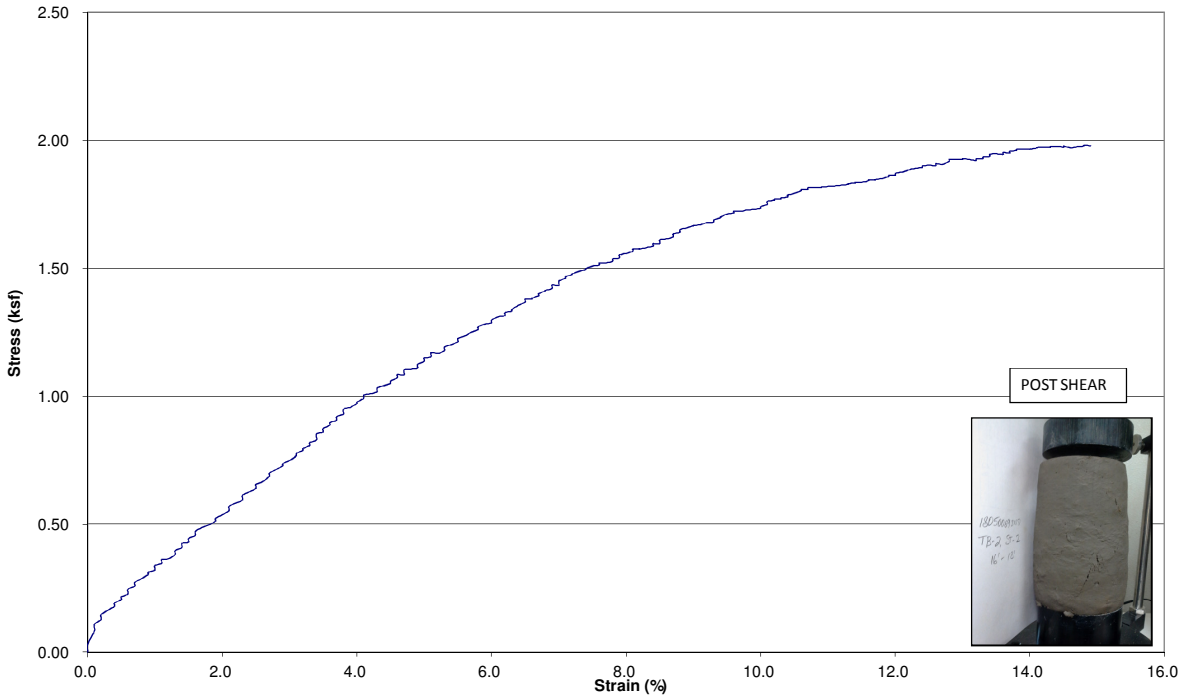

ENGINEERING INC.

One Dimensional Consolidation and Swell Properties of Soil - ASTM D 2435

CTL ENGINEERING, INC.

2860 Fisher Road

Columbus, OH 43204

Project No.:	18050069IND		
Project:	206th Street over Finley Creek	Sample Type:	Shelby Tube
Client:		Test Date:	11/7/2018
Boring No.:	TB-2	Checked By:	SM
Sample No.:	ST-2, 16'-18'	Tested By:	MW
Soil Description:	Gray, Silty, Clayey Sand (SC-SM)	LL:	16
Specific Gravity:	2.65	PL:	12

Step No.	Applied Stress (tsf)	Final Displacement (in)	Void Ratio	Strain at End (%)	Sqrt T_{90} (min)	Cv (ft^2/sec)
1	0.125	0.01366	0.184	1.41		
2	0.25	0.01806	0.178	1.86		
3	0.5	0.02374	0.171	2.45		
4	1	0.03243	0.16	3.35		
5	2	0.03974	0.151	4.1	2.4	8.93E-06
6	4	0.04894	0.14	5.05	2.1	9.79E-06
7	8	0.06023	0.126	6.22	1.4	1.51E-05
8	16	0.07138	0.112	7.37		
9	4	0.06638	0.118	6.85		
10	1	0.06301	0.122	6.5		
11	0.25	0.05799	0.129	5.98		

CONSOLIDATION PARAMETERS

Preconsolidation Pressure (tsf):	1.00	Initial Void Ratio:	0.18
Compression Index (C_c):	0.05	Compression Ratio :	0.04
Recompression Index (C_r):	0.007	Recompression Ratio:	0.006

CONSOLIDATION TEST DATA

SUMMARY REPORT

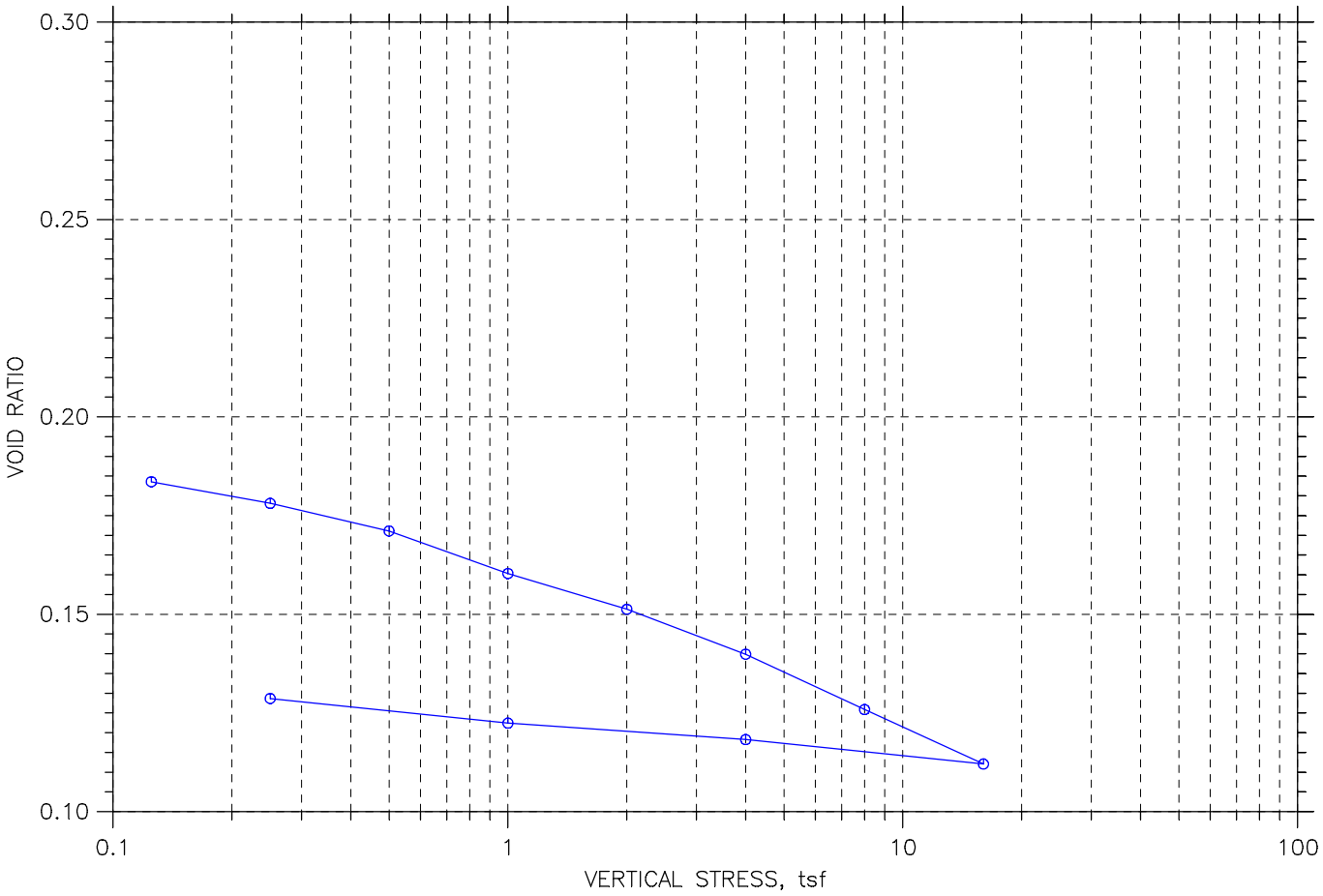

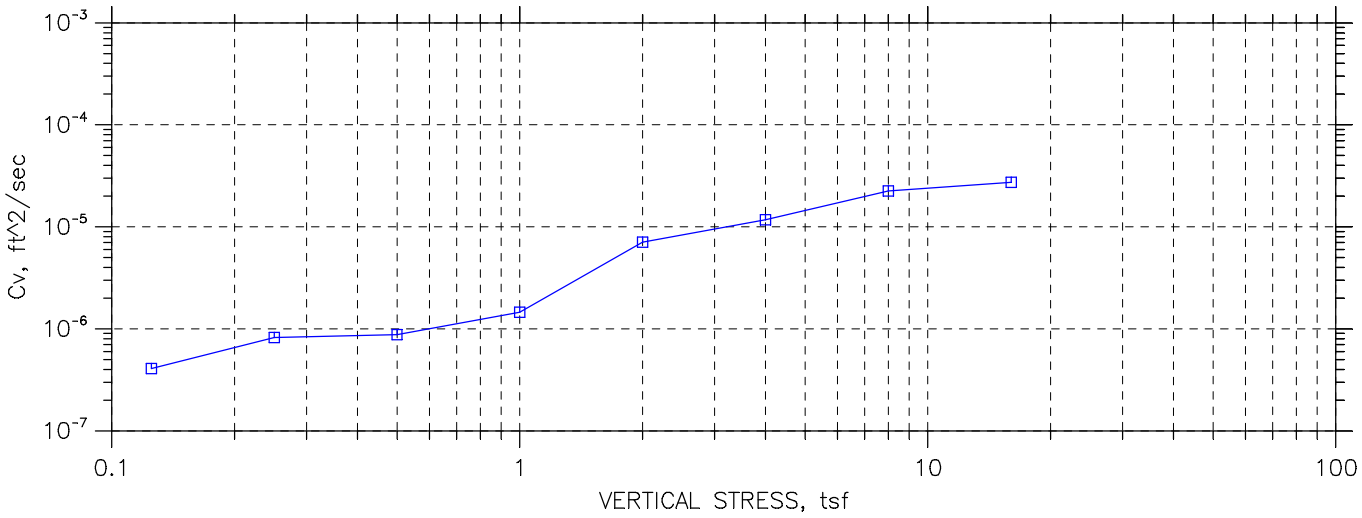

Project: 206th Street	Location: Finley Creek	Project No.: 18050069IND
Boring No.: TB-2	Tested By: MW	Checked By: SM
Sample No.: ST-2	Test Date: 11/07/18	Depth: 16'-18'
Test No.: 1	Sample Type: Shelby Tube	Elevation:
Description: Gray, Silty, Clayey Sand (SC-SM)		
Remarks:		

Mon, 19-NOV-2018 10:18:33

CONSOLIDATION TEST DATA

TIME CURVES

Step: 1 of 11

Stress: 0.125 tsf

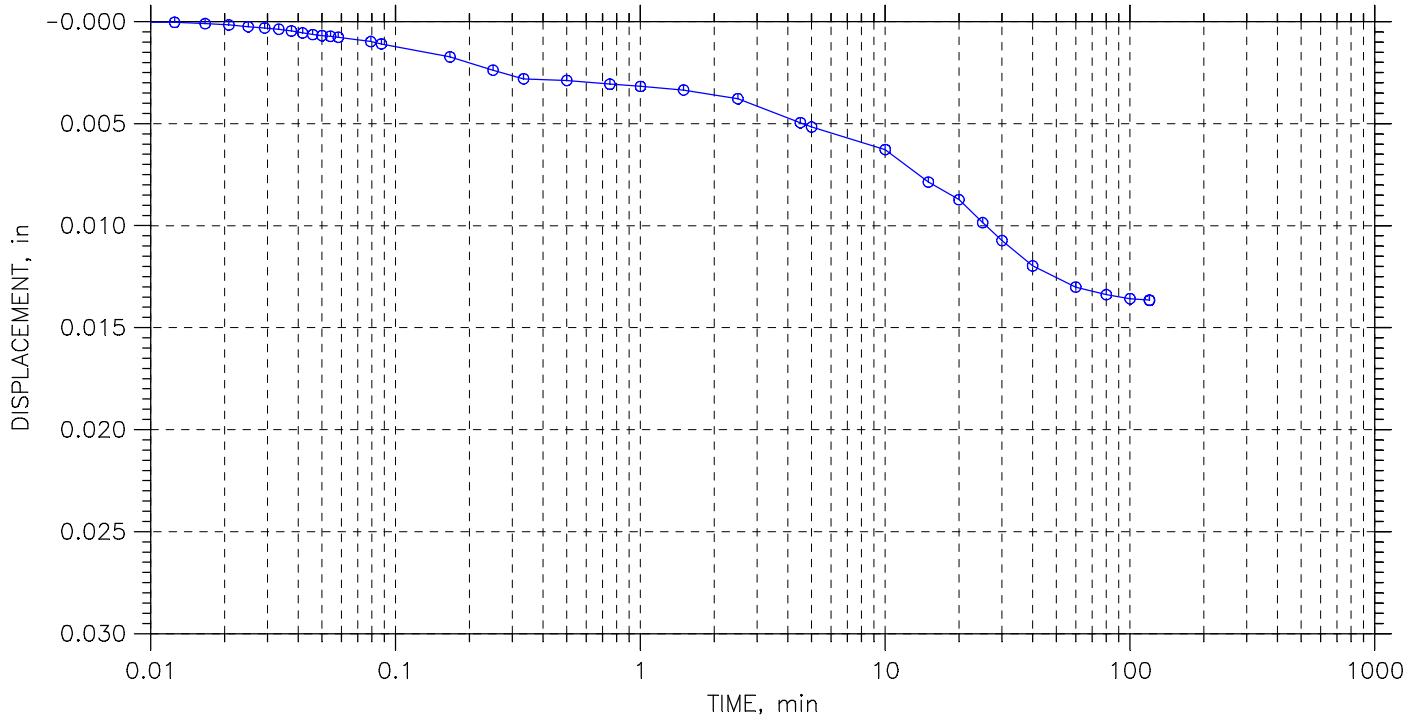

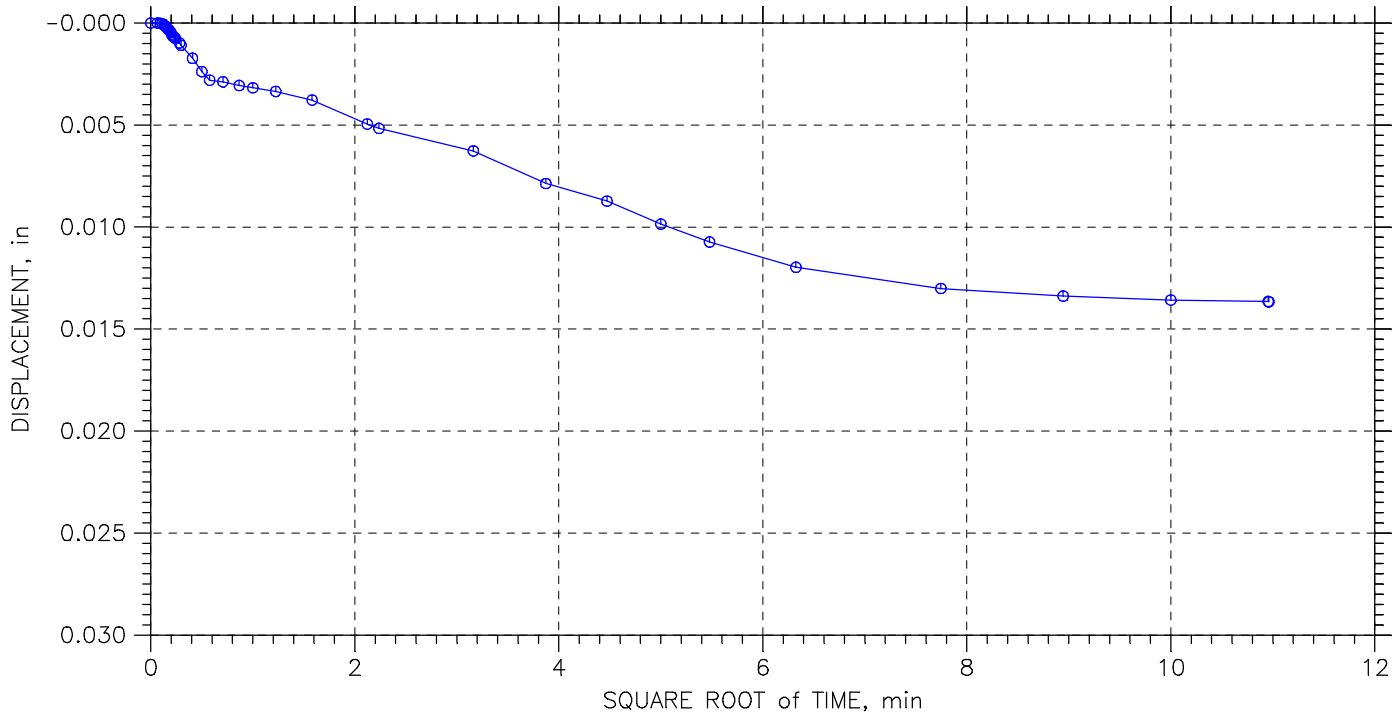

Project: 206th Street	Location: Finley Creek	Project No.: 18050069IND
Boring No.: TB-2	Tested By: MW	Checked By: SM
Sample No.: ST-2	Test Date: 11/07/18	Depth: 16'-18'
Test No.: 1	Sample Type: Shelby Tube	Elevation:
Description: Gray, Silty, Clayey Sand (SC-SM)		
Remarks:		

Mon, 19-NOV-2018 10:18:33

CONSOLIDATION TEST DATA

TIME CURVES

Step: 2 of 11

Stress: 0.25 tsf

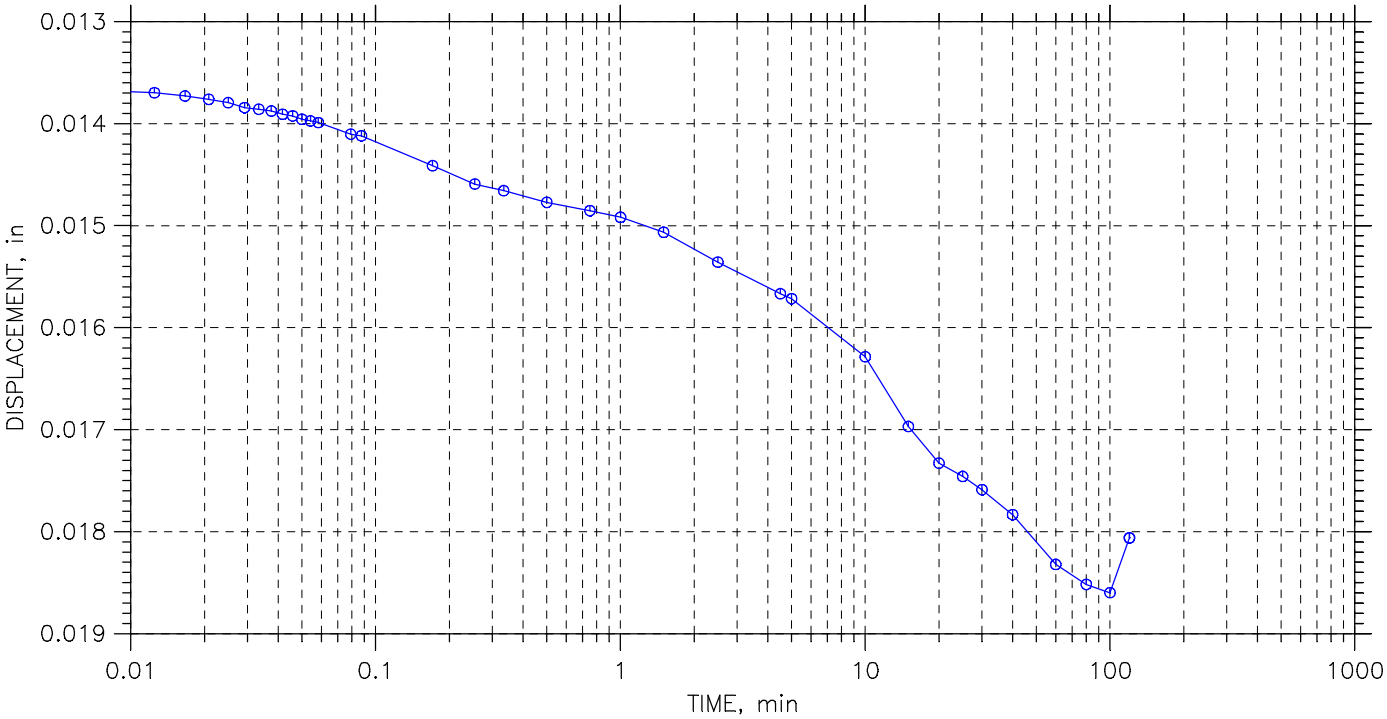

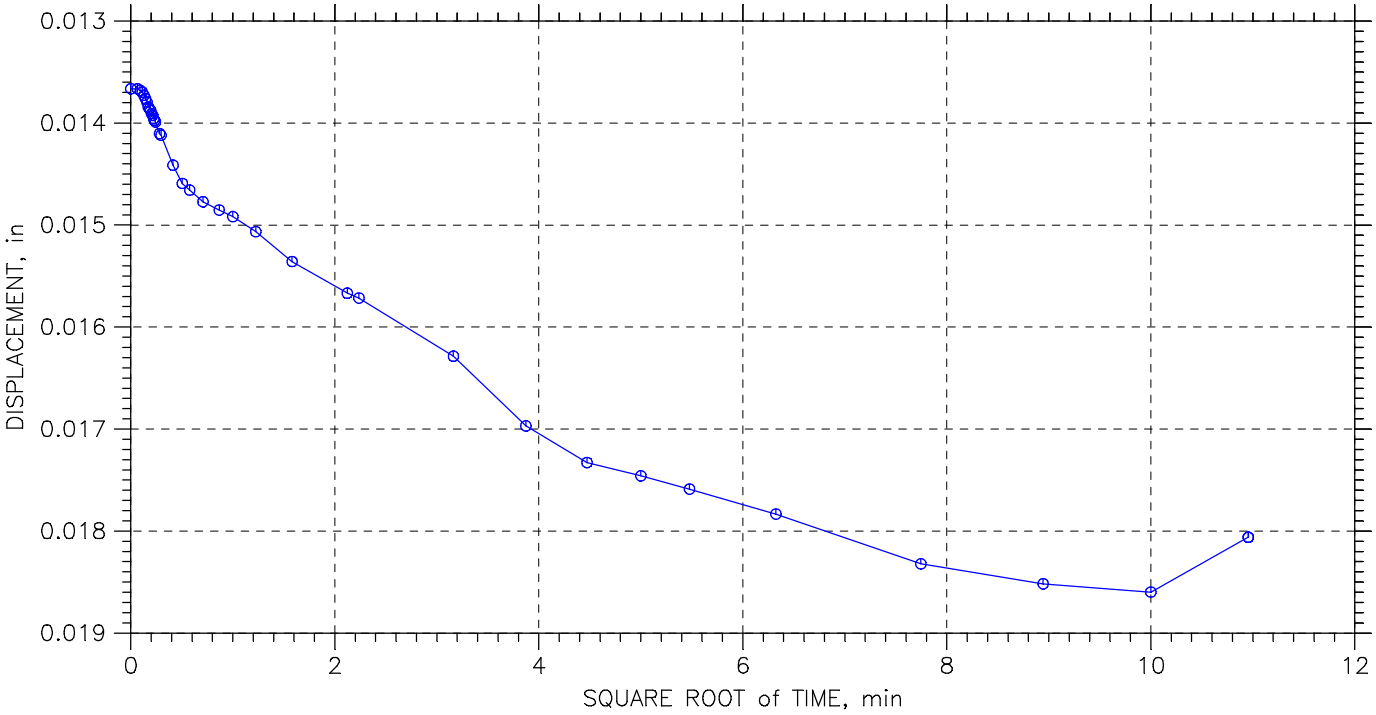

Project: 206th Street	Location: Finley Creek	Project No.: 18050069IND
Boring No.: TB-2	Tested By: MW	Checked By: SM
Sample No.: ST-2	Test Date: 11/07/18	Depth: 16'-18'
Test No.: 1	Sample Type: Shelby Tube	Elevation:
Description: Gray, Silty, Clayey Sand (SC-SM)		
Remarks:		

Mon, 19-NOV-2018 10:18:33

CONSOLIDATION TEST DATA

TIME CURVES

Step: 3 of 11

Stress: 0.5 tsf

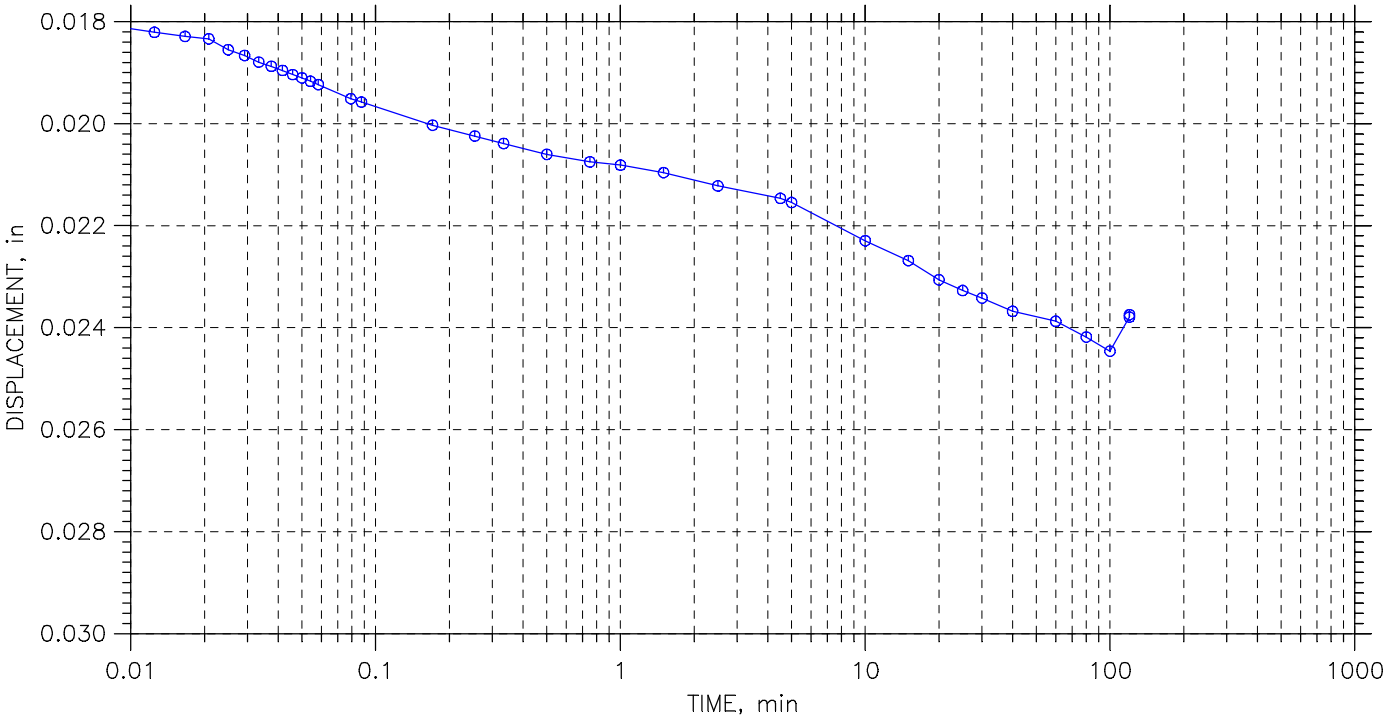

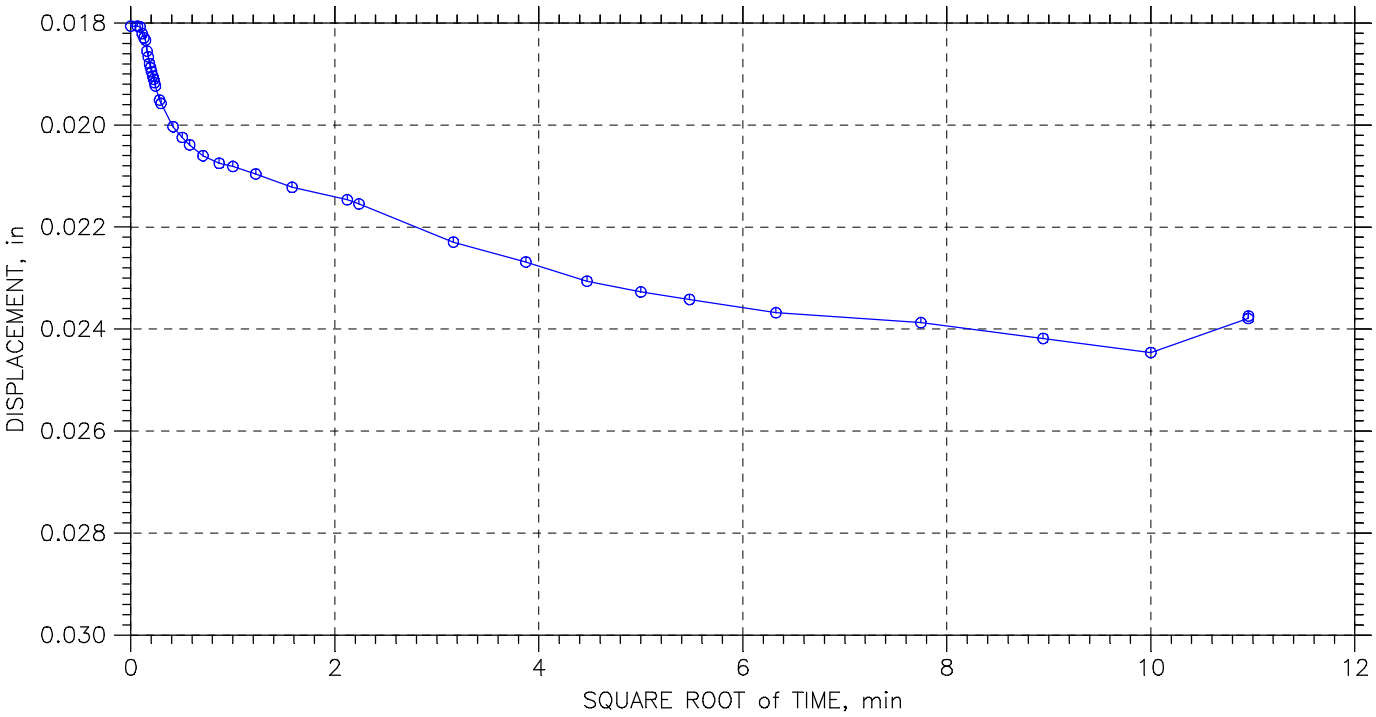

Project: 206th Street	Location: Finley Creek	Project No.: 18050069IND
Boring No.: TB-2	Tested By: MW	Checked By: SM
Sample No.: ST-2	Test Date: 11/07/18	Depth: 16'-18'
Test No.: 1	Sample Type: Shelby Tube	Elevation:
Description: Gray, Silty, Clayey Sand (SC-SM)		
Remarks:		

Mon, 19-NOV-2018 10:18:33

CONSOLIDATION TEST DATA

TIME CURVES

Step: 4 of 11

Stress: 1. tsf

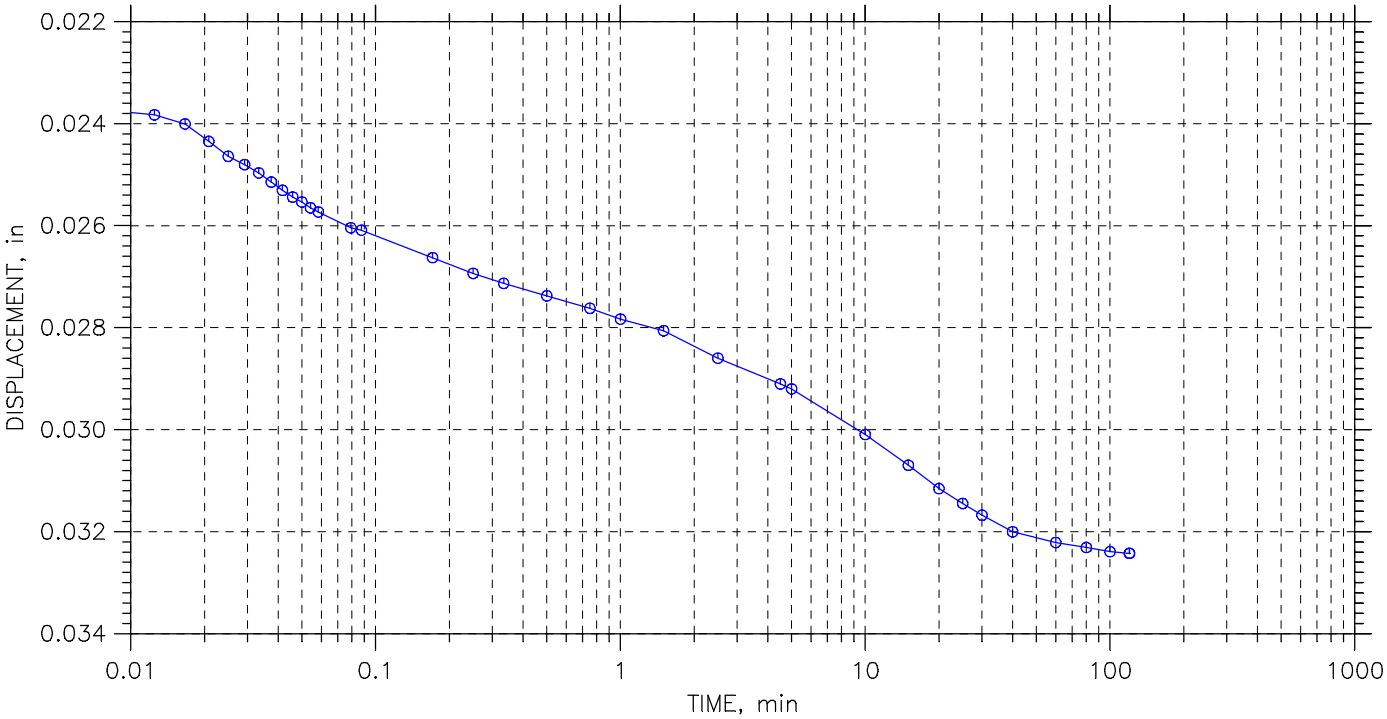

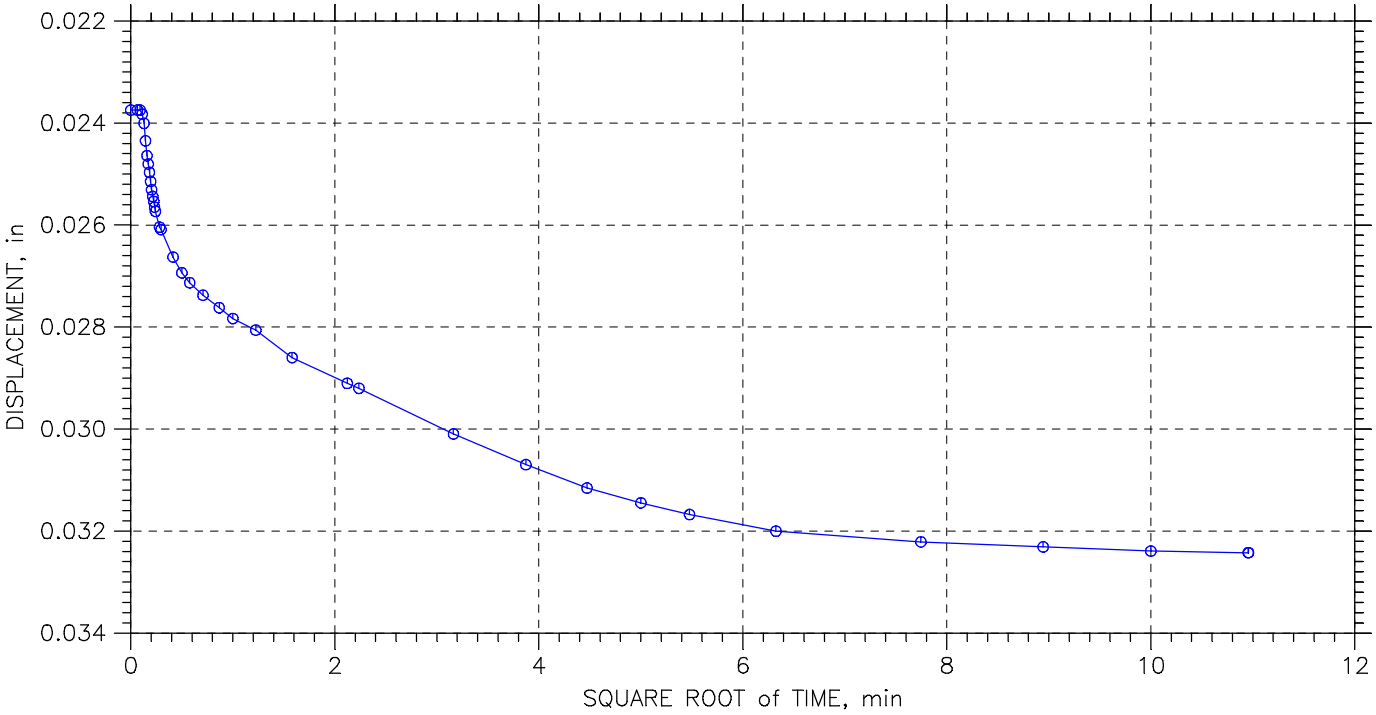

Project: 206th Street	Location: Finley Creek	Project No.: 18050069IND
Boring No.: TB-2	Tested By: MW	Checked By: SM
Sample No.: ST-2	Test Date: 11/07/18	Depth: 16'-18'
Test No.: 1	Sample Type: Shelby Tube	Elevation:
Description: Gray, Silty, Clayey Sand (SC-SM)		
Remarks:		

Mon, 19-NOV-2018 10:18:33

CONSOLIDATION TEST DATA

TIME CURVES

Step: 5 of 11

Stress: 2. tsf

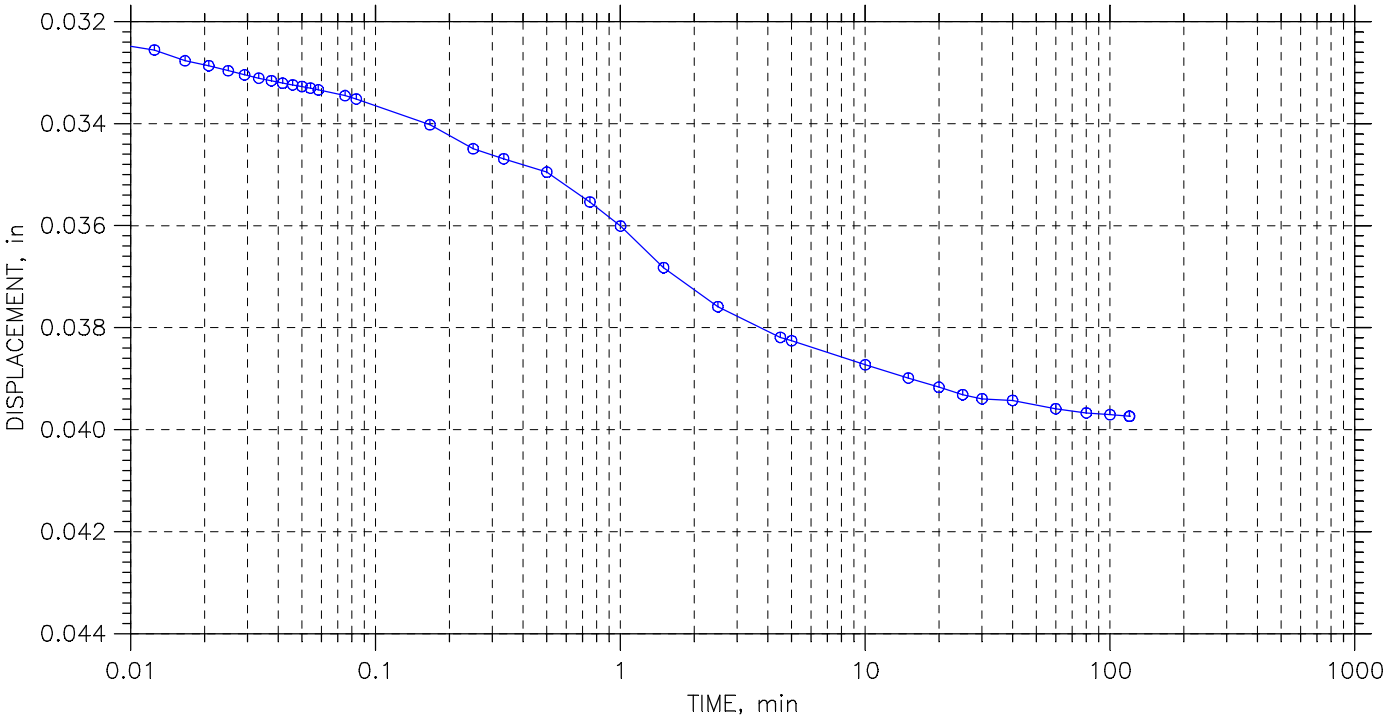

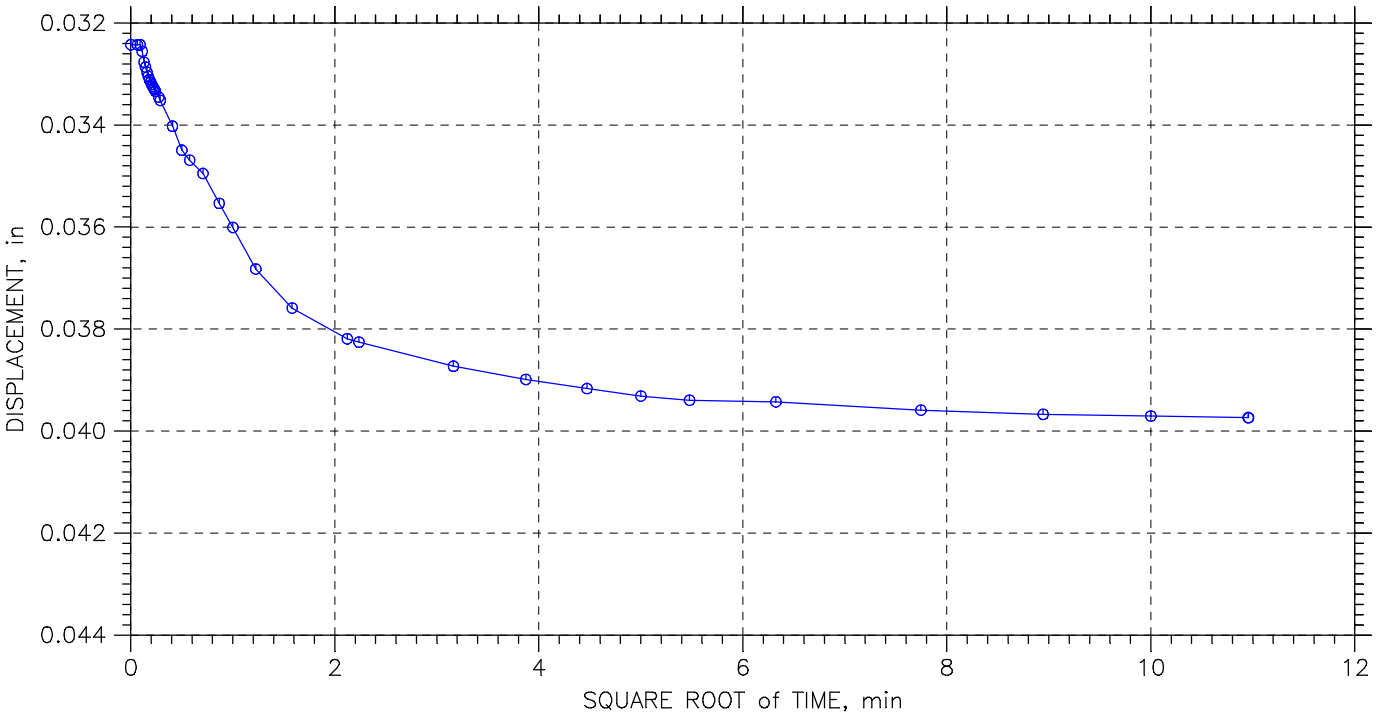

Project: 206th Street	Location: Finley Creek	Project No.: 18050069IND
Boring No.: TB-2	Tested By: MW	Checked By: SM
Sample No.: ST-2	Test Date: 11/07/18	Depth: 16'-18'
Test No.: 1	Sample Type: Shelby Tube	Elevation:
Description: Gray, Silty, Clayey Sand (SC-SM)		
Remarks:		

Mon, 19-NOV-2018 10:18:33

CONSOLIDATION TEST DATA

TIME CURVES

Step: 6 of 11

Stress: 4. tsf

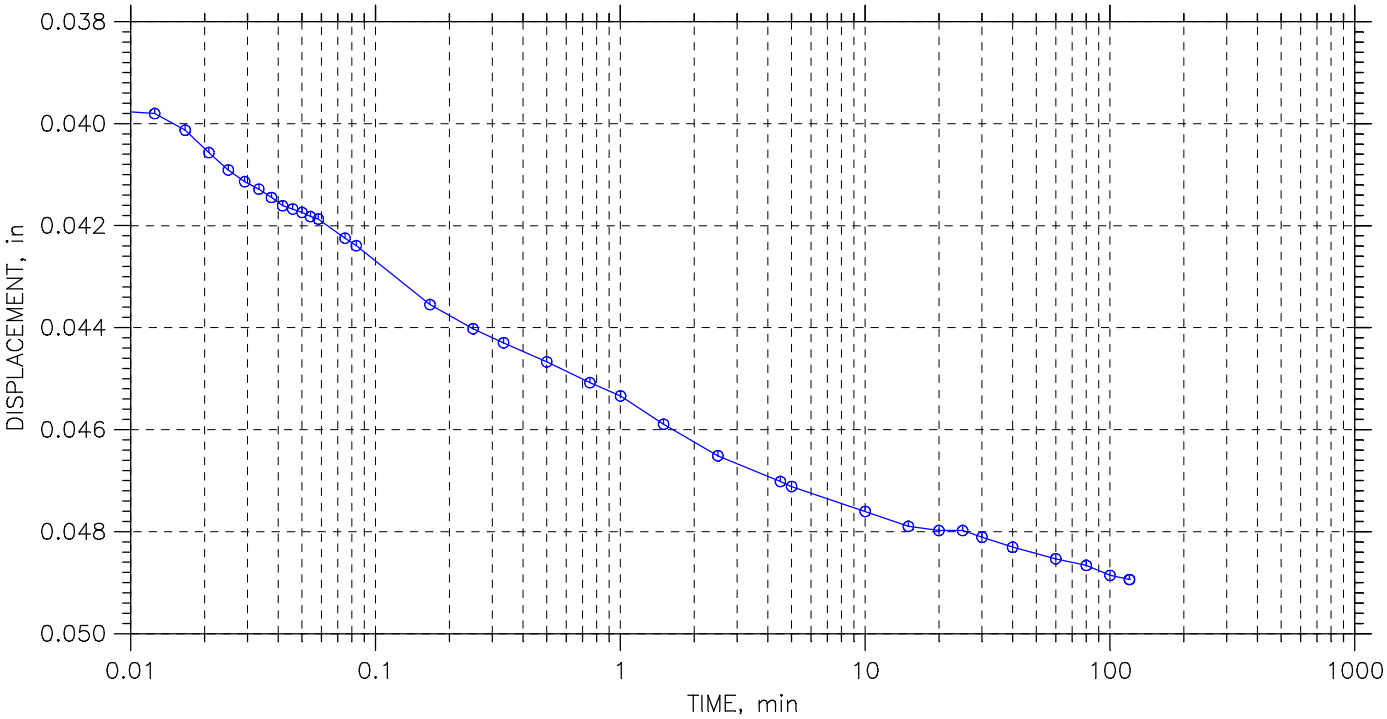

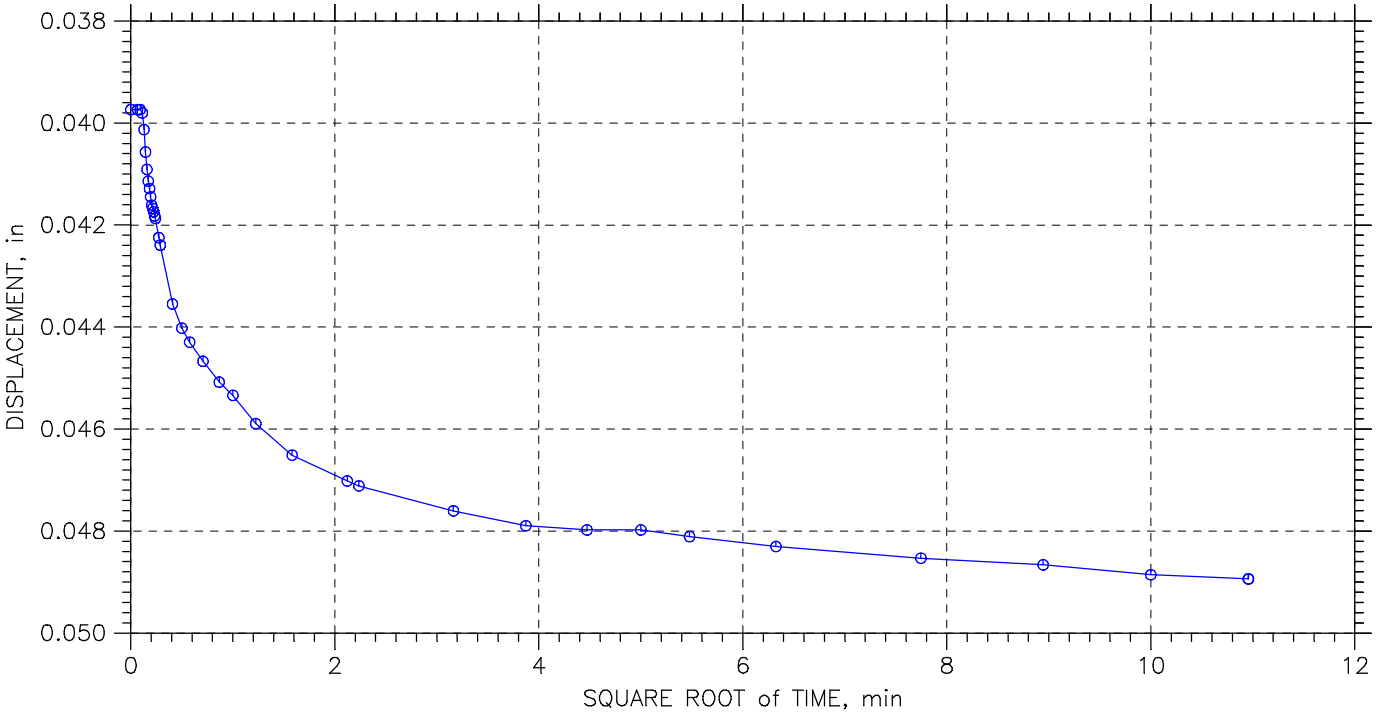

Project: 206th Street	Location: Finley Creek	Project No.: 18050069IND
Boring No.: TB-2	Tested By: MW	Checked By: SM
Sample No.: ST-2	Test Date: 11/07/18	Depth: 16'-18'
Test No.: 1	Sample Type: Shelby Tube	Elevation:
Description: Gray, Silty, Clayey Sand (SC-SM)		
Remarks:		

Mon, 19-NOV-2018 10:18:33

CONSOLIDATION TEST DATA

TIME CURVES

Step: 7 of 11

Stress: 8. tsf

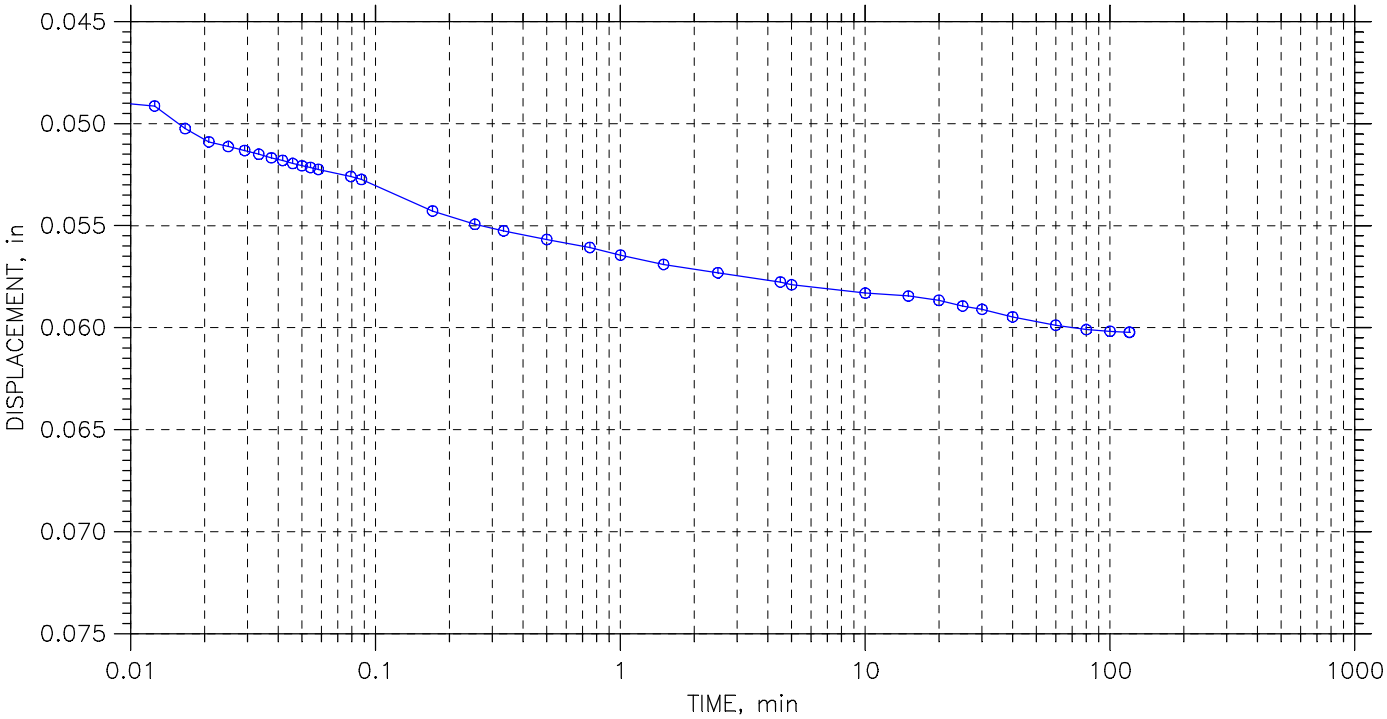

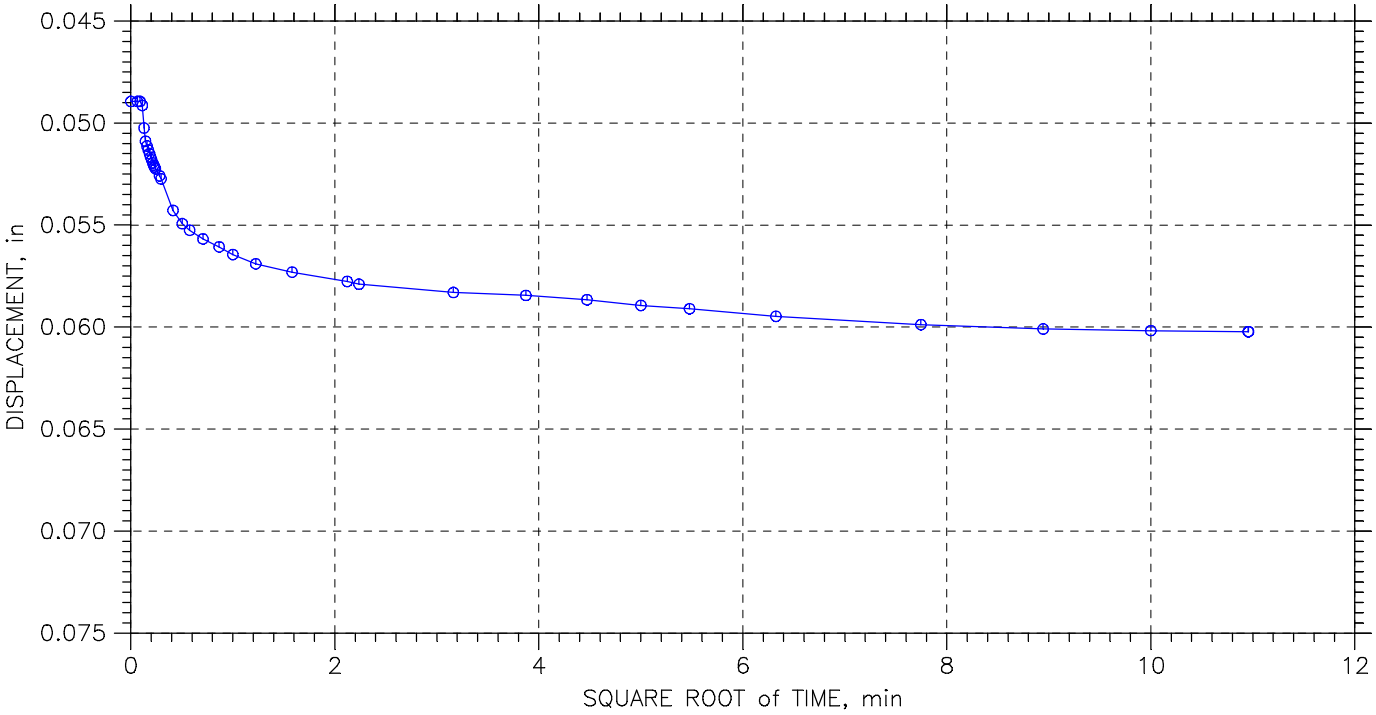

Project: 206th Street	Location: Finley Creek	Project No.: 18050069IND
Boring No.: TB-2	Tested By: MW	Checked By: SM
Sample No.: ST-2	Test Date: 11/07/18	Depth: 16'-18'
Test No.: 1	Sample Type: Shelby Tube	Elevation:
Description: Gray, Silty, Clayey Sand (SC-SM)		
Remarks:		

Mon, 19-NOV-2018 10:18:33

CONSOLIDATION TEST DATA

TIME CURVES

Step: 8 of 11

Stress: 16. tsf

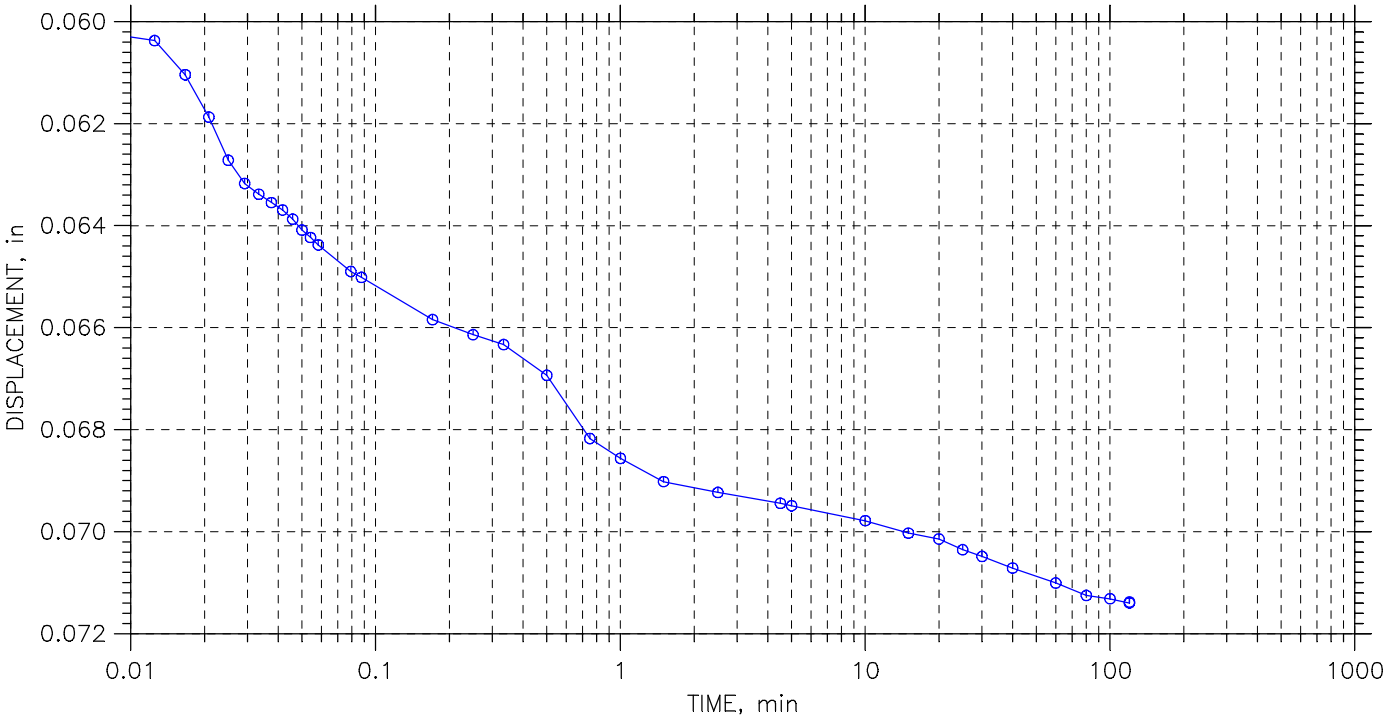

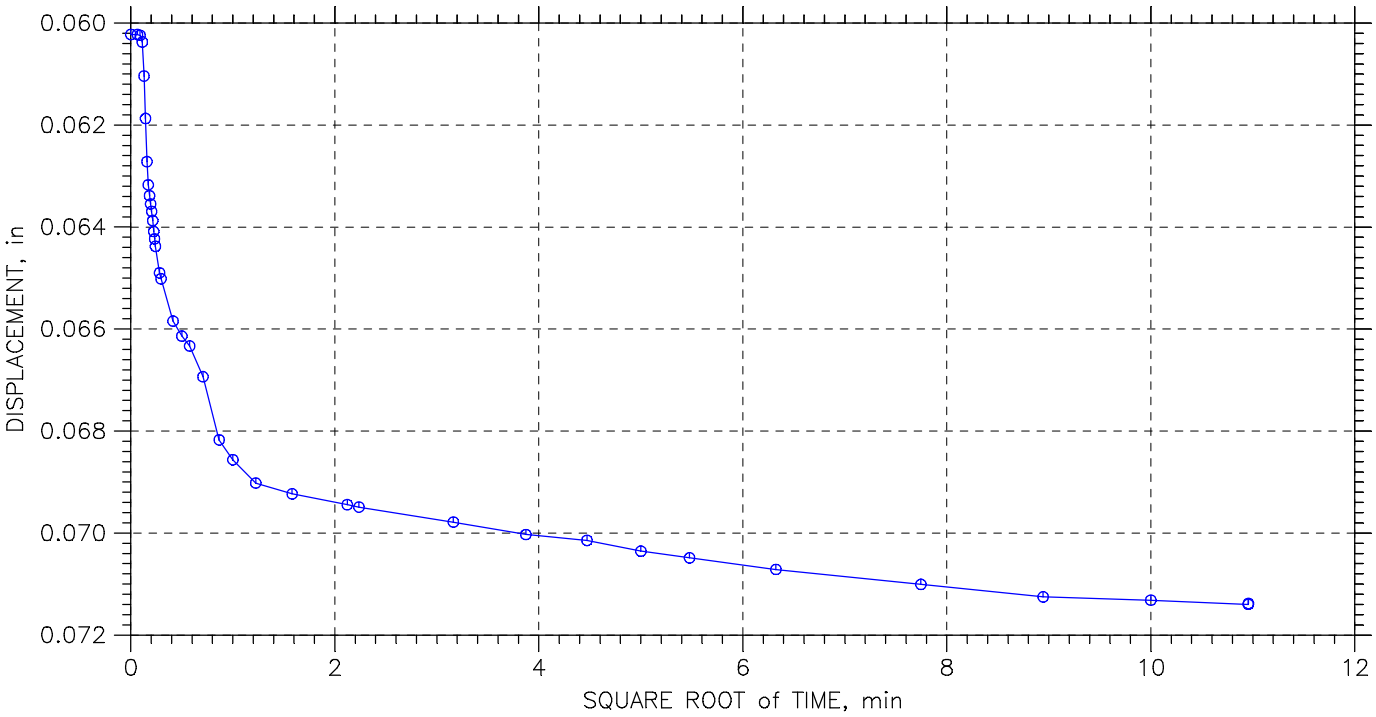

Project: 206th Street	Location: Finley Creek	Project No.: 18050069IND
Boring No.: TB-2	Tested By: MW	Checked By: SM
Sample No.: ST-2	Test Date: 11/07/18	Depth: 16'-18'
Test No.: 1	Sample Type: Shelby Tube	Elevation:
Description: Gray, Silty, Clayey Sand (SC-SM)		
Remarks:		

Mon, 19-NOV-2018 10:18:33

CONSOLIDATION TEST DATA

TIME CURVES

Step: 9 of 11

Stress: 4. tsf

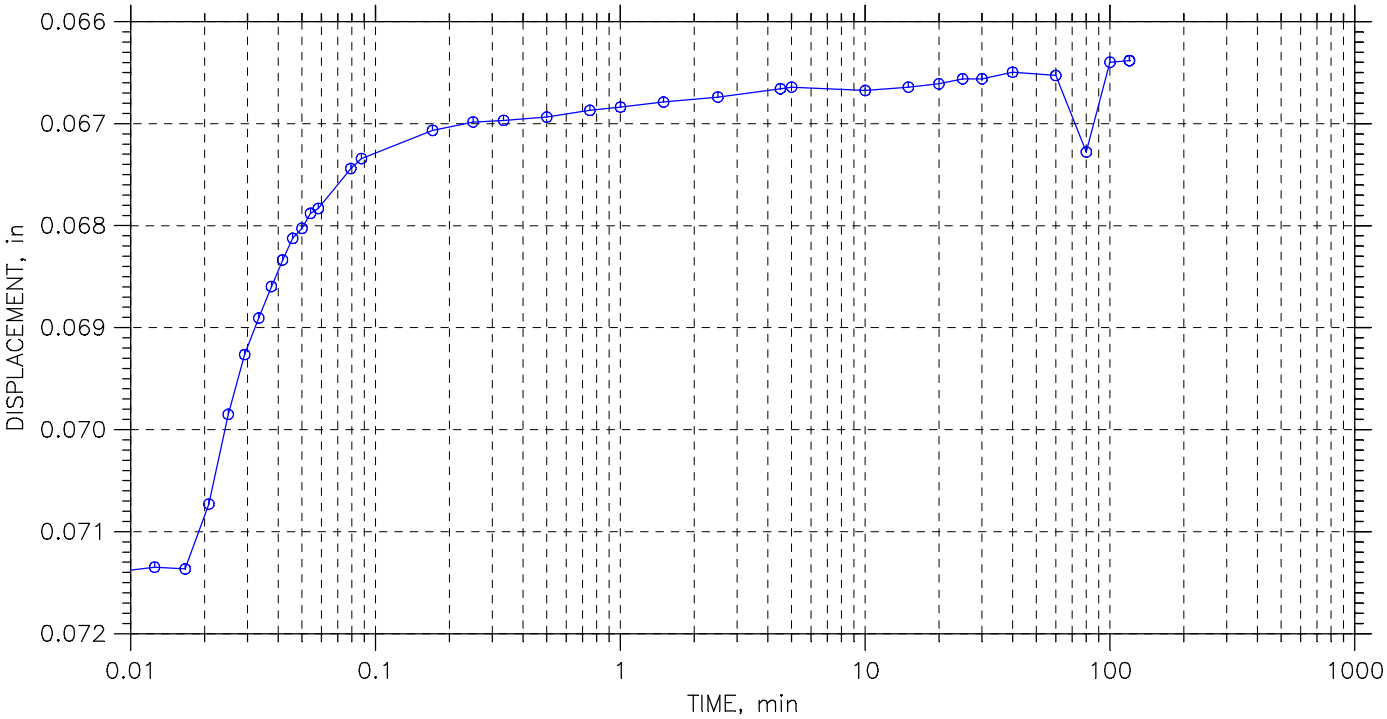

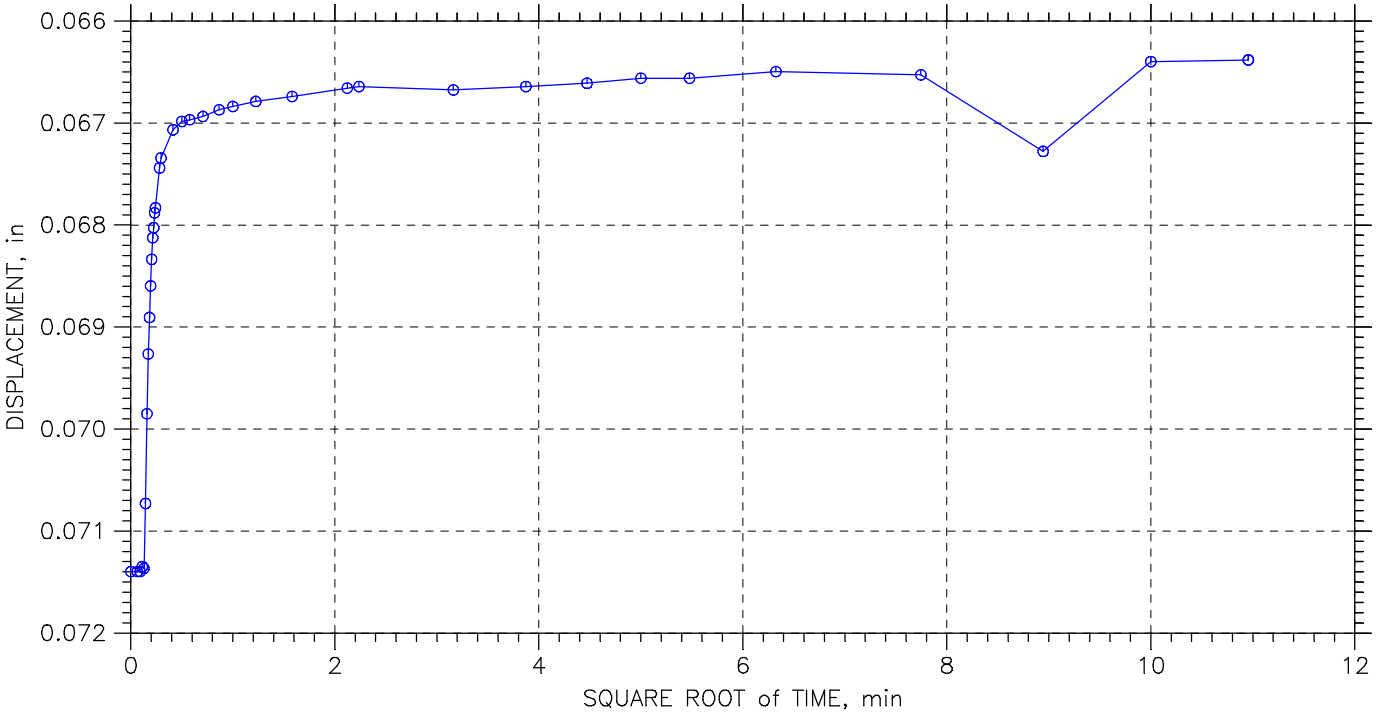

Project: 206th Street	Location: Finley Creek	Project No.: 18050069IND
Boring No.: TB-2	Tested By: MW	Checked By: SM
Sample No.: ST-2	Test Date: 11/07/18	Depth: 16'-18'
Test No.: 1	Sample Type: Shelby Tube	Elevation:
Description: Gray, Silty, Clayey Sand (SC-SM)		
Remarks:		

Mon, 19-NOV-2018 10:18:33

CONSOLIDATION TEST DATA

TIME CURVES

Step: 10 of 11

Stress: 1. tsf

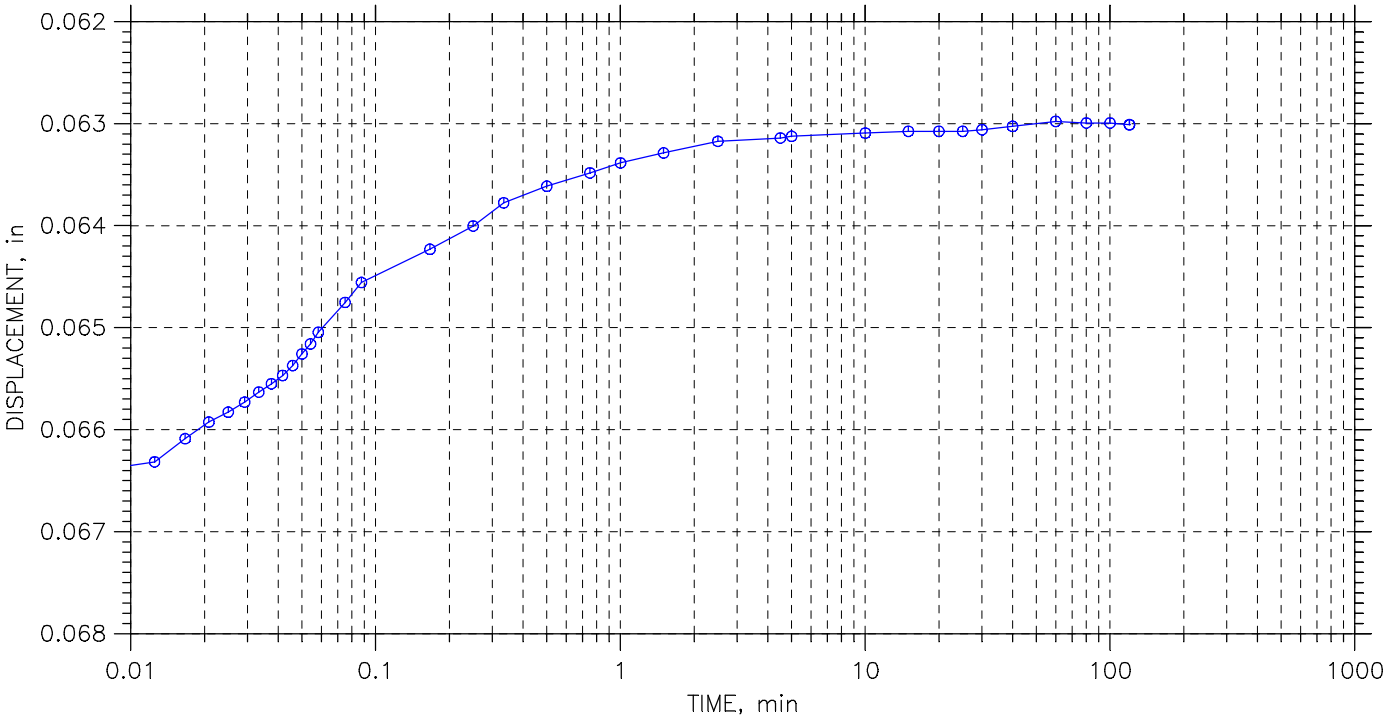

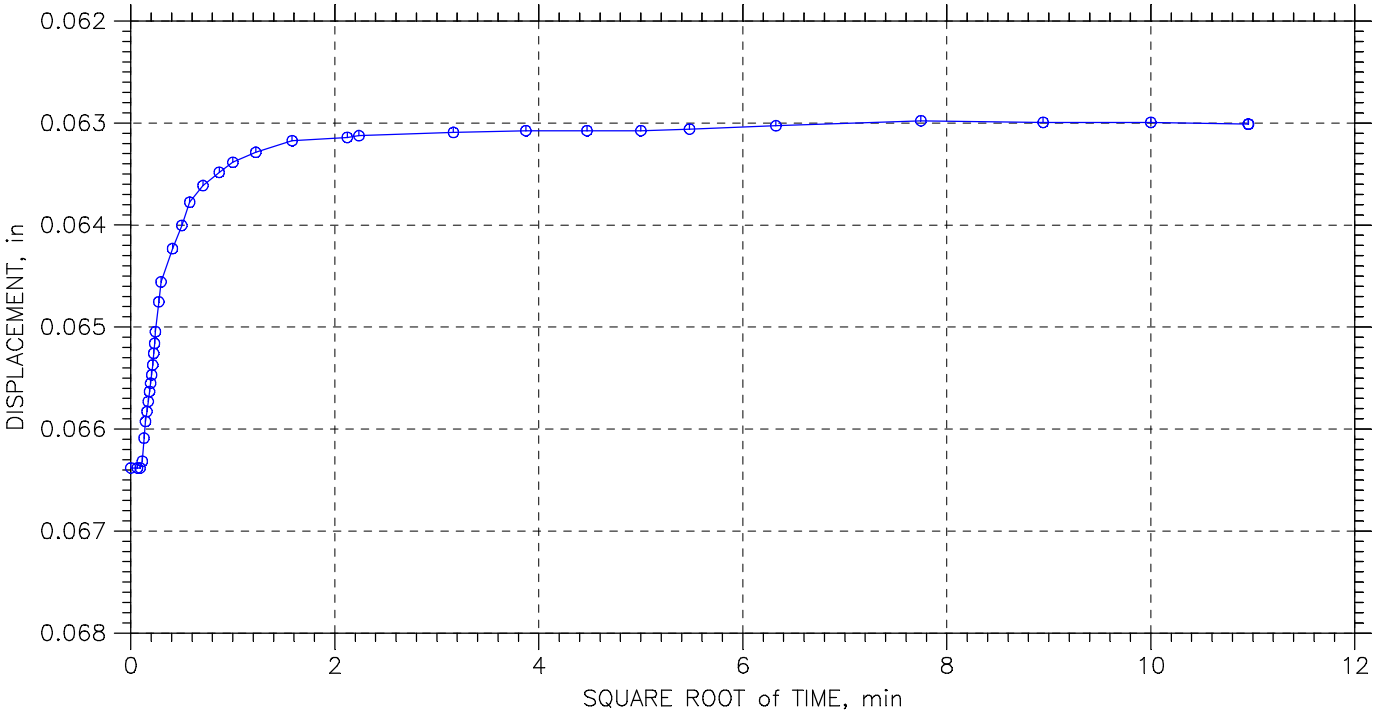

Project: 206th Street	Location: Finley Creek	Project No.: 18050069IND
Boring No.: TB-2	Tested By: MW	Checked By: SM
Sample No.: ST-2	Test Date: 11/07/18	Depth: 16'-18'
Test No.: 1	Sample Type: Shelby Tube	Elevation:
Description: Gray, Silty, Clayey Sand (SC-SM)		
Remarks:		

Mon, 19-NOV-2018 10:18:33

CONSOLIDATION TEST DATA

TIME CURVES

Step: 11 of 11

Stress: 0.25 tsf

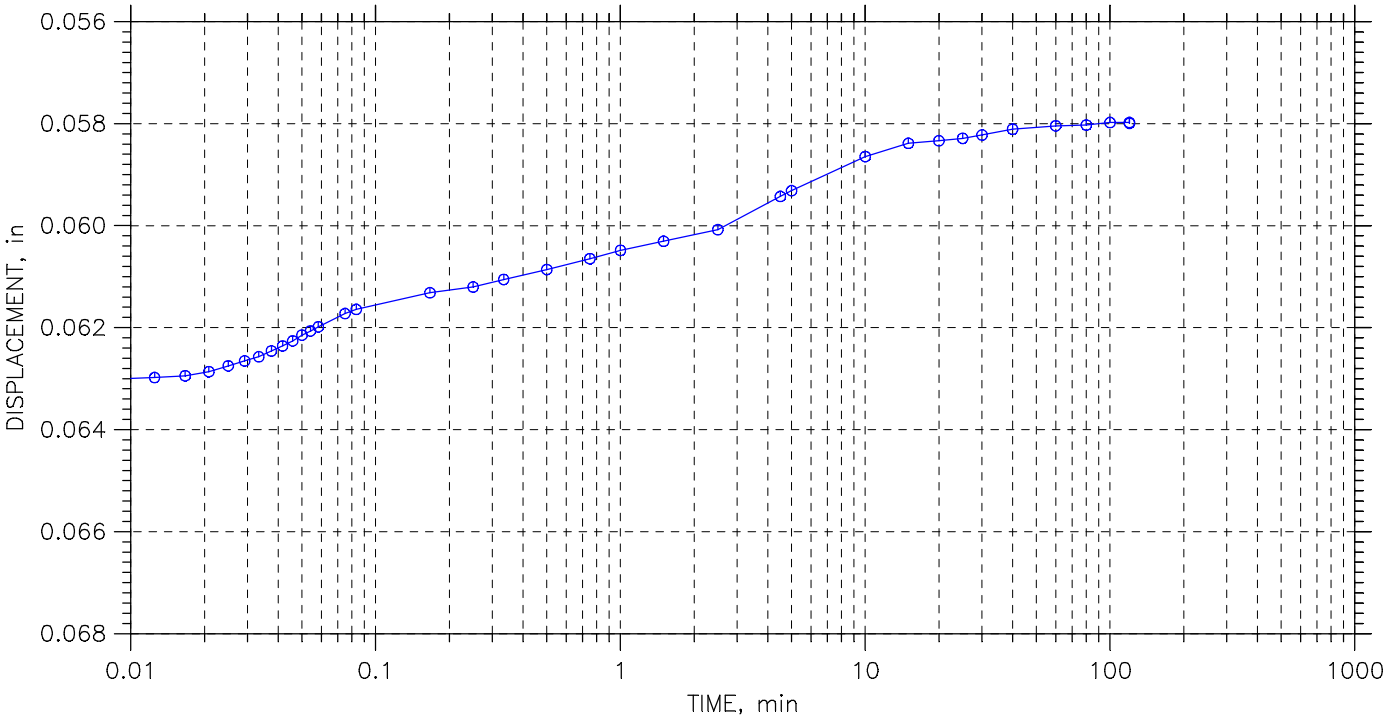

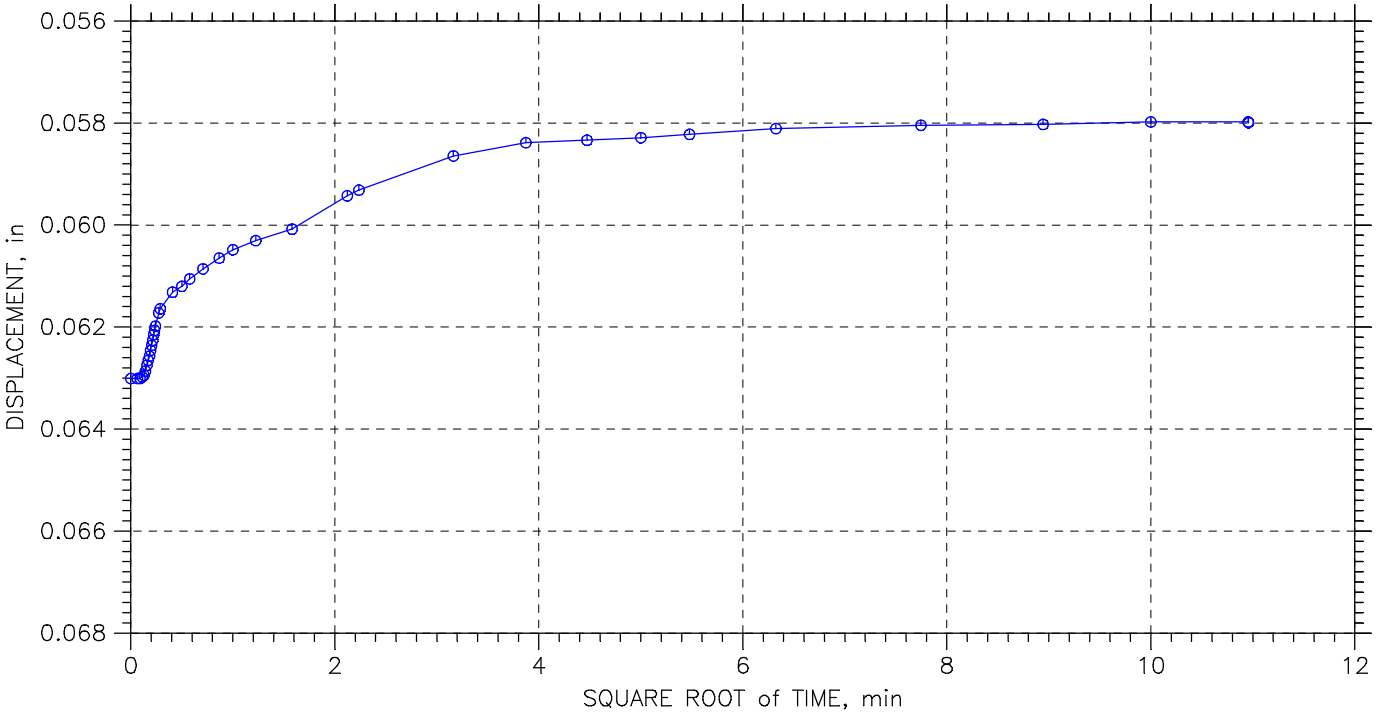

Project: 206th Street	Location: Finley Creek	Project No.: 18050069IND
Boring No.: TB-2	Tested By: MW	Checked By: SM
Sample No.: ST-2	Test Date: 11/07/18	Depth: 16'-18'
Test No.: 1	Sample Type: Shelby Tube	Elevation:
Description: Gray, Silty, Clayey Sand (SC-SM)		
Remarks:		

Mon, 19-NOV-2018 10:18:33

CTL Engineering, Inc.
Specific Gravity
ASTM D 854 / AASHTO T 100
Method B

Client:	Infrastructure Engineers	Date:	11/15/2018
Project:	Hamilton Small Structure No 21037	Tech:	MW
Project #:	18050069IND	Reviewed by:	SM
Test Number:	2		

Visual Classification:	Silty,Clayey Sand (SC-SM)
Percent Passing No. 4 Sieve:	
Material Excluded From Test:	None
Mass of Pycnometer ($M_{p)}$:	103.18
Mass of Pyncometer, Water and Soil Solids ($M_{pws,t}$):	374.89
Test Temperature (°C):	20.9

Sample ID	Specific Gravity (20°C)
TB-2, ST-2 16'-18'	2.650

Boring	Sample	Depth	Wet Density (pcf)	Dry Density (pcf)	Qu (ksf)	c (ksf)	Moisture %	Max Dry Density (pcf)	Optimum Moisture %	Resilient Modulus @ Opt.	Resilient Modulus +2% of Opt.	Resilient Modulus In-situ	Sulfate (ppm)	Phosphorus (ppm)	Potassium (ppm)	LOI (%)	Calcium Carbonate (%)	pH
RB-1	SS-1	1.0-2.5					9.9											
RB-1	SS-2	2.5-4.0					15.3											7.9
RB-1	SS-3	4.0-5.5					12.3											7.9
RB-1	SS-4	6.0-7.5					13.0											
RB-2	SS-1	0.5-2.0					13.4											
RB-2	SS-2	2.5-4.0					20.7											
RB-2	SS-3	4.0-5.5					15.6											
RB-2	SS-4	6.0-7.5					14.8											
TB-1	SS-1	1.0-2.5					19.0											
TB-1	SS-2	3.5-5.0					30.8											
TB-1	SS-3	6.0-7.5	132.0	116.6	5.646	2.823	13.2											
TB-1	SS-4	8.5-10.0	105.5	94.4	5.094	2.547	11.8											
TB-1	SS-5	11.0-12.5					11.2											
TB-1	SS-6	13.5-15.0					8.9											
TB-1	SS-7	16.0-17.5					11.9											
TB-1	SS-8	18.5-20.0					12.5											
TB-1	SS-9	21.0-22.5					11.0											
TB-1	SS-10	23.5-25.0					13.5											8.0
TB-1	SS-11	28.5-30.0					12.5											
TB-1	SS-12	33.5-35.0					16.6											7.8
TB-1	SS-13	38.5-40.0					11.4											
TB-1	SS-14	43.5-45.0	143.9	129.9	5.924	2.962	10.8											
TB-1	SS-15	48.5-50.0					11.9											
TB-2	SS-1	1.0-2.5					4.3											
TB-2	SS-2	3.5-5.0					20.1											
TB-2	SS-3	6.0-7.5					10.9											

CTL Engineering, Inc.
Phone: 317-295-8650

SUMMARY OF SPECIAL LABORATORY TEST RESULTS

Des. No. : ---
Project Type : Culvert Replacement
Route : 206th Street
Location : 206th Street over Finley Creek

Project No. : ---
County : Hamilton
CTL Proj. No. : 18050069IND

Boring	Sample	Depth	Wet Density (pcf)	Dry Density (pcf)	Qu (ksf)	c (ksf)	Moisture %	Max Dry Density (pcf)	Optimum Moisture %	Resilient Modulus @ Opt.	Resilient Modulus +2% of Opt.	Resilient Modulus In-situ	Sulfate (ppm)	Phosphorus (ppm)	Potassium (ppm)	LOI (%)	Calcium Carbonate (%)	pH
TB-2	SS-4	8.5-10.0					13.2											
TB-2	ST-1	10.0-12.0	144.4	130.4	5.909	2.954	10.8											
TB-2	SS-5	13.5-15.0	144.3	132.5	6.566	3.283	8.9											
TB-2	SS-6	18.5-20.0					12.9											
TB-2	SS-7	23.5-25.0					17.4											
TB-2	SS-8	28.5-30.0					10.3											7.9
TB-2	SS-9	33.5-35.0					16.6											
TB-2	SS-10	38.5-40.0					11.0											
TB-2	SS-11	43.5-45.0					9.4											
TB-2	SS-12	48.5-50.0					11.5											
TB-2	SS-13	53.5-55.0					11.0											
TB-2	SS-14	58.5-60.0					14.1											
TB-2	SS-15	63.5-65.0					14.1											
TB-2	SS-16	68.5-70.0					14.1											

CTL ENGINEERING
CTL Engineering, Inc.
Phone: 317-295-8650

SUMMARY OF SPECIAL LABORATORY TEST RESULTS

Des. No. : ---
Project Type : Culvert Replacement
Route : 206th Street
Location : 206th Street over Finley Creek

Project No. : ---
County : Hamilton
CTL Proj. No. : 18050069IND

APPENDIX D

SOIL PROFILE
SEISMIC COEFFICIENTS

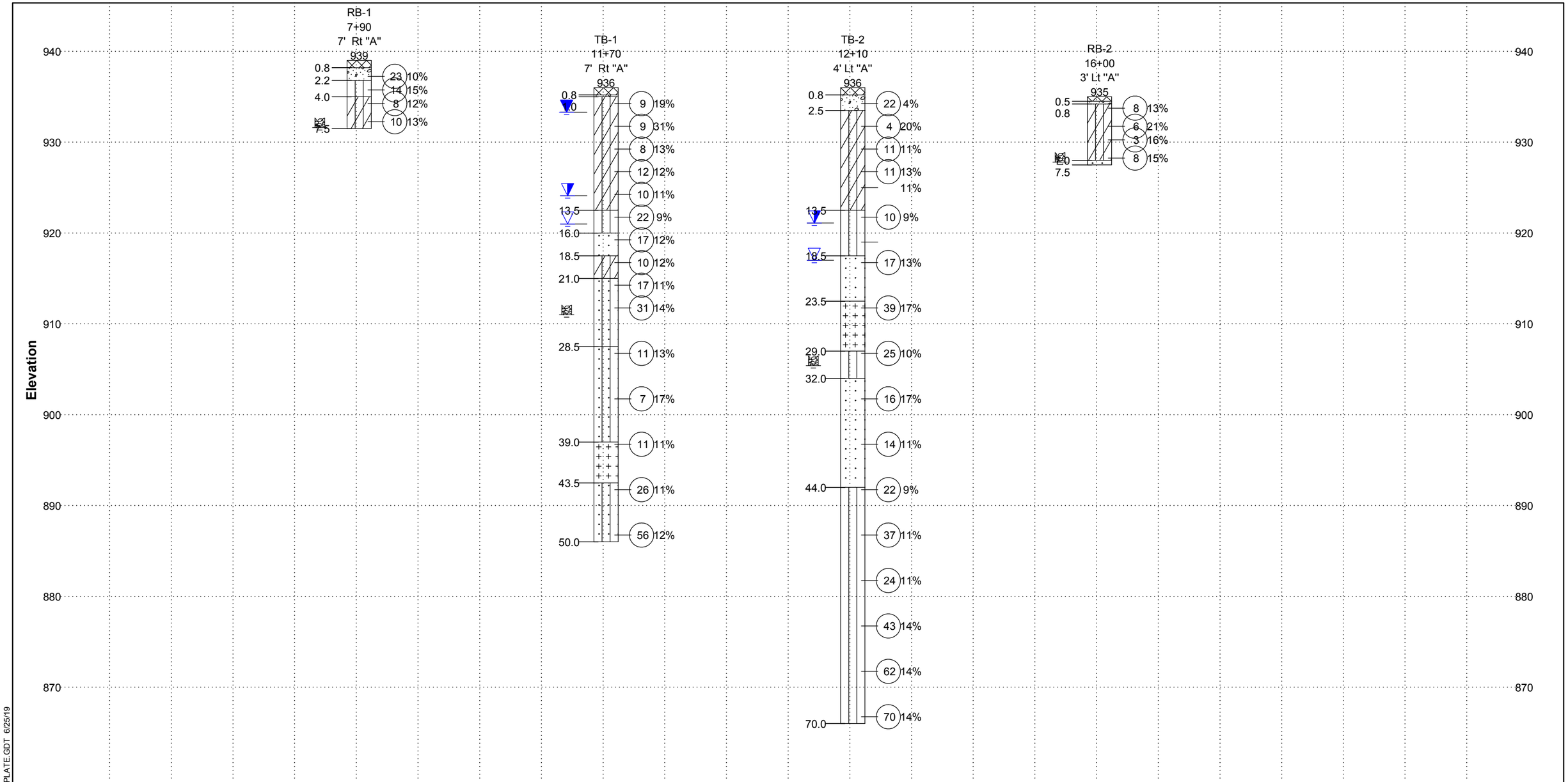

CTL Engineering, Inc.
www.ctleng.com

LEGEND

Asphalt
Sand & Gravel
Loam
Clay Loam
Sand
Sandy Loam
Silt

N — STANDARD PENETRATION IN BLOWS PER FOOT (N)
W% — PERCENT MOISTURE CONTENT(w)
REC — PERCENT ROCK CORE RECOVERY
RQD — ROCK QUALITY DESIGNATION (%)

GROUNDWATER DURING DRILLING
GROUND WATER AT COMPLETION OF DRILLING
GROUNDWATER AT "N" HOURS AFTER COMPLETION
CAVED IN DEPTH

GENERALIZED SOIL PROFILE

Scale	As Shown
Date	6/25/19
Drawn By	
Reviewed By	

Infrastructure Engineering, Inc
Culvert Replacement
206th Street over Finley Creek
Hamilton County, Indiana
Des. No.: ---

CTL Project No.: 18050069IND

Sheet 1

INDOT_SO 18050069IND.GPJ INDOT_DATA TEMPLATE.GDT 6/25/19

Small Structure No. 21037, Hamilton County

Latitude, Longitude: 40.085621, -86.209178

Date	6/25/2019, 11:56:15 AM
Design Code Reference Document	IBC-2015
Risk Category	II
Site Class	D - Stiff Soil

Type	Value	Description
S_S	0.143	MCE_R ground motion. (for 0.2 second period)
S_1	0.08	MCE_R ground motion. (for 1.0s period)
S_{MS}	0.229	Site-modified spectral acceleration value
S_{M1}	0.192	Site-modified spectral acceleration value
S_{DS}	0.152	Numeric seismic design value at 0.2 second SA
S_{D1}	0.128	Numeric seismic design value at 1.0 second SA

Type	Value	Description
SDC	B	Seismic design category
F_a	1.6	Site amplification factor at 0.2 second
F_v	2.4	Site amplification factor at 1.0 second
PGA	0.065	MCE_G peak ground acceleration
F_{PGA}	1.6	Site amplification factor at PGA
PGA_M	0.104	Site modified peak ground acceleration
T_L	12	Long-period transition period in seconds
SsRT	0.143	Probabilistic risk-targeted ground motion. (0.2 second)
SsUH	0.157	Factored uniform-hazard (2% probability of exceedance in 50 years) spectral acceleration
SsD	1.5	Factored deterministic acceleration value. (0.2 second)
S1RT	0.08	Probabilistic risk-targeted ground motion. (1.0 second)
S1UH	0.093	Factored uniform-hazard (2% probability of exceedance in 50 years) spectral acceleration.
S1D	0.6	Factored deterministic acceleration value. (1.0 second)
PGAd	0.6	Factored deterministic acceleration value. (Peak Ground Acceleration)
C_{RS}	0.909	Mapped value of the risk coefficient at short periods
C_{R1}	0.864	Mapped value of the risk coefficient at a period of 1 s

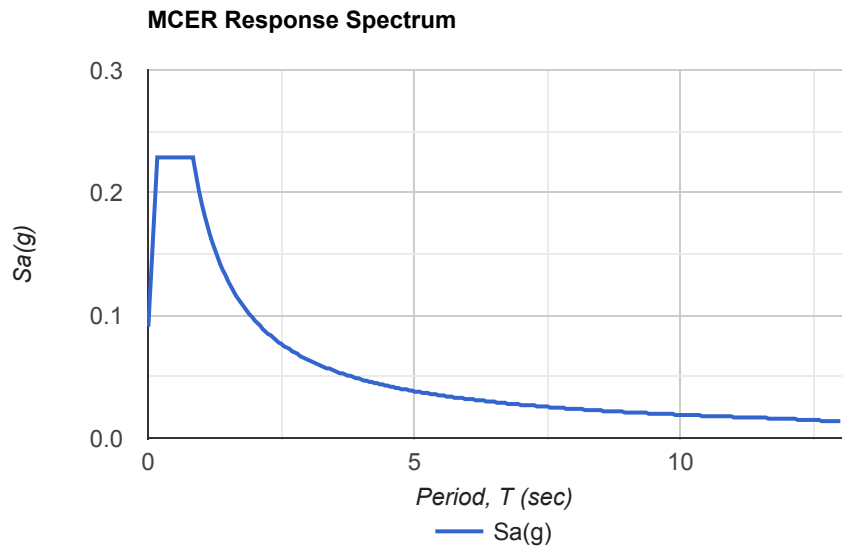

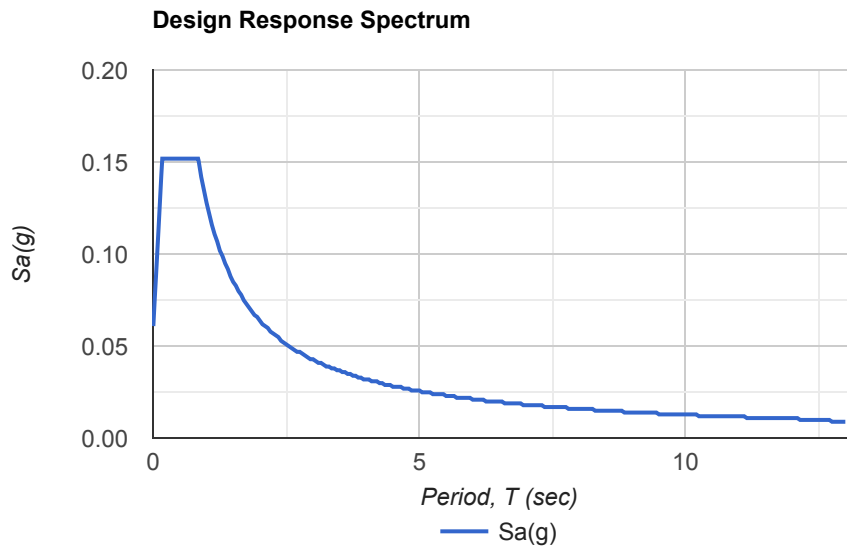

DISCLAIMER

While the information presented on this website is believed to be correct, SEAOC /OSHPD and its sponsors and contributors assume no responsibility or liability for its accuracy. The material presented in this web application should not be used or relied upon for any specific application without competent examination and verification of its accuracy, suitability and applicability by engineers or other licensed professionals. SEAOC / OSHPD do not intend that the use of this information replace the sound judgment of such competent professionals, having experience and knowledge in the field of practice, nor to substitute for the standard of care required of such professionals in interpreting and applying the results of the seismic data provided by this website. Users of the information from this website assume all liability arising from such use. Use of the output of this website does not imply approval by the governing building code bodies responsible for building code approval and interpretation for the building site described by latitude/longitude location in the search results of this webstie.

APPENDIX E

GEOSYNTHETIC REINFORCED SOIL (GRS) EXTERNAL STABILITY ANALYSIS
SLOPE STABILITY ANALYSIS
SETTLEMENT ANALYSIS

GEOSYNTHETIC REINFORCED SOIL (GRS) EXTERNAL STABILITY ANALYSIS (LRFD)
GRS at Bent 1 (Boring TB-1)

Des. No.:	N/A
Project:	Hamilton 21037
Location:	206th Street over Finley Creek
CTL Project No.:	18050069IND

Top of GRS	=	933.99	(Varies)	with clear space	
Bottom of GRS	=	920.16	(Varies)		
Bridge Span from face to face of wall, L_{span}	=	37.00	feet		
Bridge Width with Skew, B_b	=	33.05	feet		
Bridge bearing width, b	=	5.00	feet		
Setback distance, a	=	0.667	feet		
Width over the GRS where road base DL acts, b_{rb}	=	0.700	feet	Given	
Height of road base = height of bridge beam, h_{rb}	=	1.83	feet	Given	
DL, Q_{DL}	=	388.30	kips	Estimated based on design loads provided	
LL, Q_{LL}	=	248.10	kips	Estimated based on design loads provided	
Estimated Abutment Height, H_{abut}	=	13.8	feet		
Clear Space	=	included	feet		
Wall Height, H	=	13.8	feet		
Width of RSF, B_{RSF}	=	7.5	feet	Given	greater than or equal to $B_{total}+0.25B_{total}$
Base Reinforcement Length, B_{total}	=	6.0	feet	Given	Minimum of 6 feet or 0.3H
Height of RSF, D_{RSF}	=	1.50	feet	Given	greater than or equal to $0.25B_{total}$
Length of RSF in front of abutment wall face, x_{RSF}	=	1.50	feet	Given	
Height/Width of the facing element, b_{block}	=	0.64	feet		
Base Length, B (without block)	=	5.4	feet		

GEOSYNTHETIC REINFORCED SOIL (GRS) EXTERNAL STABILITY ANALYSIS (LRFD)
GRS at Bent 1 (Boring TB-1)

Des. No.:	N/A
Project:	Hamilton 21037
Location:	206th Street over Finley Creek
CTL Project No.:	18050069IND

Equivalent height of overburden for traffic surcharge, h_{eq}	=	2.62	feet	Table 3.11.6.4-1, AASHTO
Unfactored Bridge DL, q_b	=	2,350	psf	$=Q_{DL}/(B_b*b)$ Sum DL + LL ≤ 4000 psf
Unfactored Bridge LL, q_{LL}	=	1,501	psf	$=Q_{LL}/(B_b*b)$
Estimated Unit Weight of Road Base, g_{rb}	=	140	pcf	
Estimated Unit Weight of Foundation/Backfill, g_f / g_b	=	130	pcf	
Estimated Unit Weight of Reinforced Fill, g_r	=	130	pcf	
Estimated Friction Angle of Retained Soil, Phi	=	30	degrees	
Estimated Friction Angle of Reinforced Fill, Phi	=	34	degrees	
Active Pressure of Retained Soil, Kab	=	0.333		
Active Pressure of Reinforced Fill, Ka	=	0.283		
Estimated Traffic Surcharge, q_t	=	340	psf	
Estimated Road base DL, q_{rb}	=	257	psf	
Weight of GRS abutment, W	=	9645	lb/ft	$=BHg_r$
Weight of RSF, W_{RSF}	=	1463	lb/ft	$=B_{RSF}D_{RSF}g_r$
Weight of facing blocks, W_{face}	=	702	lb/ft	$=N_{block}(W_{block}/L_{block})$
Friction Angle of Bearing Soil, Phi	=	0.00	degrees	(Strength value of existing underlying medium stiff to very stiff loam.
Cohesion of Bearing Soil, c	=	**2.50**	**ksf**	
Unit Weight of Bearing Soil, Gamma	=	0.130	kcf	
Adhesion Strength of Native Soil, Ca	=	2.50	ksf	
Undercut required, h_{cut}	=	0.00	feet	

GEOSYNTHETIC REINFORCED SOIL (GRS) EXTERNAL STABILITY ANALYSIS (LRFD)
GRS at Bent 1 (Boring TB-1)

Des. No.:	N/A
Project:	Hamilton 21037
Location:	206th Street over Finley Creek
CTL Project No.:	18050069IND

Factored Vertical Force, V1 (max)	=	13.02	kips	$=1.35*W$
Factored Vertical Force, V2 (max)	=	1.97	kips	$=1.35*W_{RSF}$
Factored Vertical Force, V3 (max)	=	0.88	kips	$=1.25*W_{face}$
Factored Vertical Force, V4 (max)	=	0.42	kips	$=1.75*q_t b_{rb}$
Factored Vertical Force, V5 (max)	=	0.27	kips	$=1.5*q_{rb} b_{rb}$
Factored Vertical Force, V6 (max)	=	14.69	kips	$=1.25*q_b b$
Factored Vertical Force, V7 (max)	=	13.14	kips	$=1.75*q_{LL} b$
Driving Forces				
Factored Horizontal Force, Fb	=	6.22	kips	$=0.5*Ka*g_b H^2*1.5$
Factored Horizontal Force, Frb	=	1.77	kips	$=Ka*q_{rb}*H'*1.5$
Factored Horizontal Force, Ft	=	2.74	kips	$=Ka*q_t*H'*1.75$
Sum of Driving Forces	=	10.74	kips	

$N_{cm} = N_c s_c$

$N_{gm} = N_g s_g$

GEOSYNTHETIC REINFORCED SOIL (GRS) EXTERNAL STABILITY ANALYSIS (LRFD)
GRS at Bent 1 (Boring TB-1)

Des. No.:	N/A
Project:	Hamilton 21037
Location:	206th Street over Finley Creek
CTL Project No.:	18050069IND

						N_{qm} =	$N_q s_q$
Sum of Driving Moments, SM_D	=	59.91	ft-lb/ft	$=(F_b*H/3)+(F_{rb}*H/2)+(F_t*H/2)$		N_c =	5.14
Sum of Resisting Moments, SM_{RR}	=	55.82	ft-lb/ft	$=(V6+V7)[(b/2+a)-(B_{RSF}/2-x_{RSF}-b_{block})]+(V4+V5)(B_{RSF}/2-b_{rb}/2)+W(B_{RSF}/2-B/2)$		N_q =	1.00
						N_g =	0.00
e_B (calculated for bearing resistance)	=	**0.09**	**feet**	$=(SM_D-SM_R)/SV$		s_c =	1.02
Bearing Resistance (CDR >= 1.0) ?				f= 0.65 and $B = B_{RSF}-(2*e_B)$		s_g =	1.00
Factored Bearing Resistance, Qr (static)	=	8.59	ksf	$=[(c*N_{cm})+gD_fN_{qm}C_{WQ}+(0.5*g_{fill}*B*N_{gm}C_{wg})]*f$		s_q =	1.00
Factored Bearing Resistance undercut, Qr (static)	=	8.59	ksf	$=Qr*e^{\wedge 0.67[1+(B/L)](hcut/B)}$		D_w =	0.0
Sigma V	=	6.07	ksf	$=SV/(L-2e_B)$		D_f =	3.0
Static CDR (bearing resistance)	=	**1.42**		**OK**	**CDR >= 1.0**	C_{wg} =	0.5
						C_{wq} =	0.5
Sliding (CDR >= 1.0) ?						N_{cm} =	5.24
Factored Sliding Resisting, R_R	=	13.73	kips	$=[(1.00*W)+(0.9*q_b b)+(0.75*q_{rb}b_{rb}]*(TAN(phi))$			
Factored Driving Force, F_R	=	10.74	kips	$=F_b+F_{rb}+F_t$			
Static CDR (sliding)	=	**1.28**		**OK**	**CDR >= 1.0**		
Deep Seated Stability (CDR >= 1.0) ?		**1.5**		**required Factor of Safety**			
Factor of Safety (calculated)	=	**4.0**					
Static CDR (rotational)	=	**1.5**	**OK**		**CDR >= 1.0**		

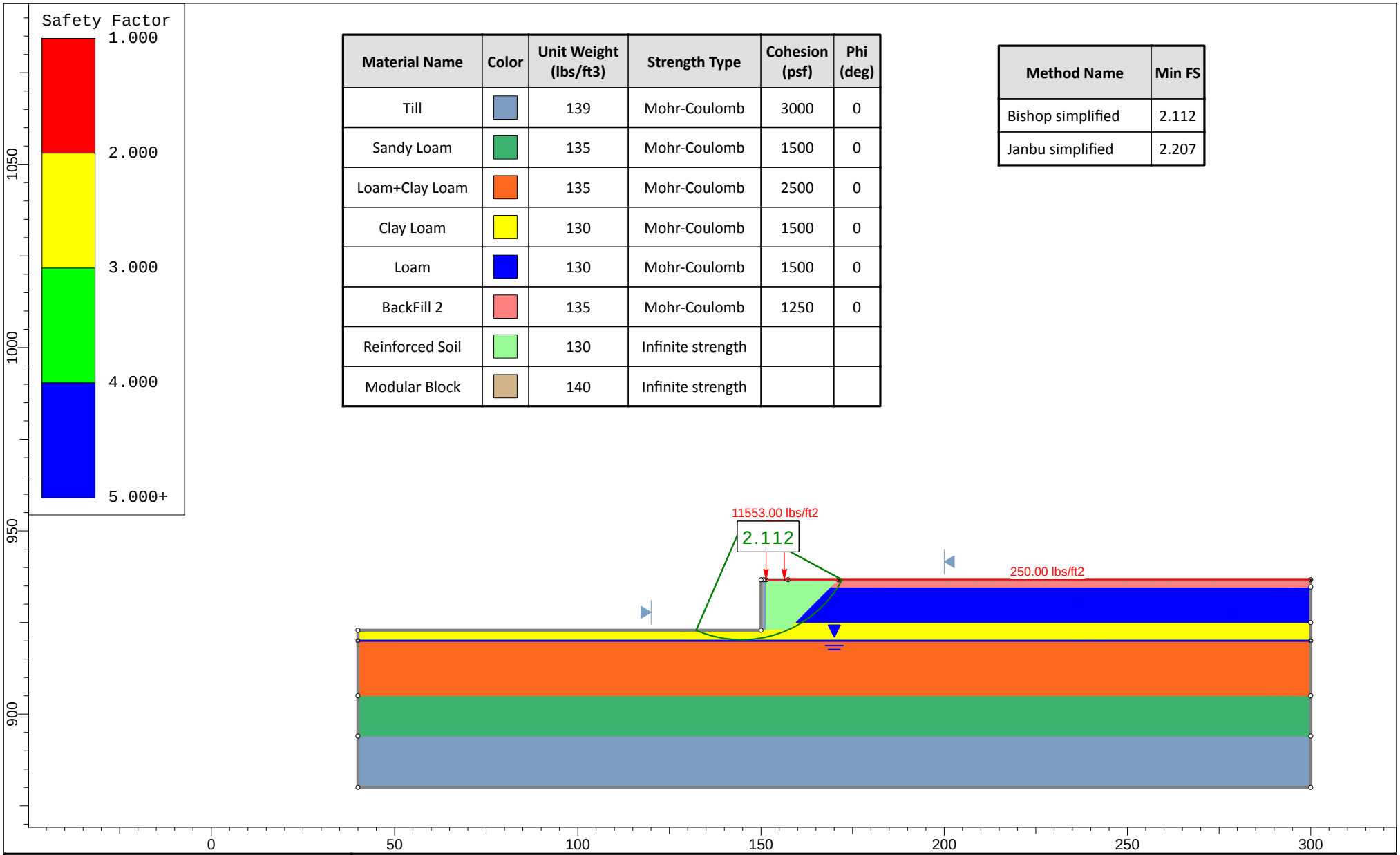

Material Name	Color	Unit Weight (lbs/ft3)	Strength Type	Cohesion (psf)	Phi (deg)
Till		139	Mohr-Coulomb	3000	0
Sandy Loam		135	Mohr-Coulomb	1500	0
Loam+Clay Loam		135	Mohr-Coulomb	2500	0
Clay Loam		130	Mohr-Coulomb	1500	0
Loam		130	Mohr-Coulomb	1500	0
BackFill 2		135	Mohr-Coulomb	1250	0
Reinforced Soil		130	Infinite strength		
Modular Block		140	Infinite strength		

Method Name	Min FS
Bishop simplified	2.112
Janbu simplified	2.207

CTL Engineering, Inc.
www.ctleng.com

SLIDEINTERPRET 8.018

Project	Culvert Replacement, Hamilton County		
Analysis Description	Slope Stability Analysis		
Drawn By	AK	Scale 1:434	Company CTL Engineering
Date	06/24/2019		File Name 18-69 GRS Slope Stability_Total Stress.slmd

Material Name	Color	Unit Weight (lbs/ft3)	Strength Type	Cohesion (psf)	Phi (deg)
BackFill 2		135	Mohr-Coulomb	0	35
Modular Block		140	Infinite strength		
Reinforced Soil		130	Infinite strength		
Loam		130	Mohr-Coulomb	150	25
Clay Loam		130	Mohr-Coulomb	200	25
Loam+Clay Loam		135	Mohr-Coulomb	150	28
Sandy Loam		135	Mohr-Coulomb	150	28
Till		139	Mohr-Coulomb	150	28

Method Name	Min FS
Bishop simplified	1.486
Janbu simplified	1.424

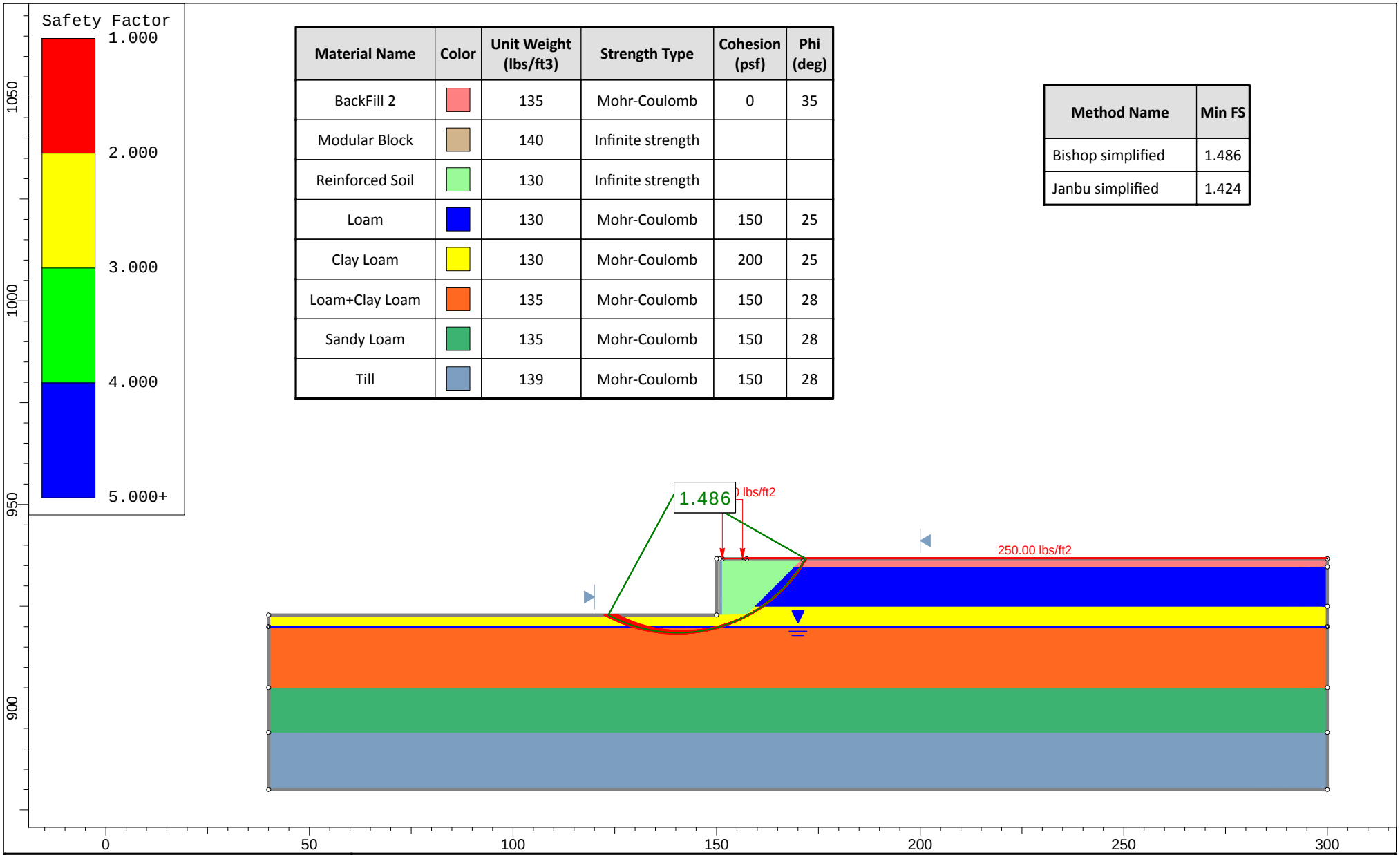

CTL Engineering, Inc.
www.ctleng.com

SLIDEINTERPRET 8.018

Project	Culvert Replacement, Hamilton County		
Analysis Description	Slope Stability Analysis		
Drawn By	AK	Scale 1:391	Company CTL Engineering
Date	06/24/2019		File Name 18-69 GRS Slope Stability_Effective Stress.slmd

SETTLEMENT ANALYSIS OF EMBANKMENT FILL
Embankment at 21+00 (Boring TB-2)

Client:	Infrastructure Engineering, Inc.
Project:	Small Structure Replacement, Structure No. 21037
Location	206th Street over Finley Creek, Hamilton County, IN
CTL Project No.:	18050069IND

DATA

Fill Height, H_f = **6.0** feet **Height of Fill**

Fill Unit Weight, D_f = 130 pcf

Point	Point Depth (feet)	Layer Thickness (feet)	Liquid Limit (LL)	Plastic Limit (PL)	Plasticity Index (PI)	Moisture Content (w)	Specific Gravity (Gs)	Unit Weight (pcf)	Effective Unit Weight (pcf)	Liquidity Index	
A	3.00	6.00	37.8	18.6	19.2	25.0	2.70	120	120	0.3	
B	3.25	6.50	37.8	18.6	19.2	12.0	2.70	120	120	---	
C	2.50	5.00	21.3	13.6	7.7	10.0	2.65	130	67.6	---	
D	5.00	10.00	21.3	13.6	7.7	12.0	2.65	135	72.6	---	
E	5.00	10.00	21.3	13.6	7.7	12.0	2.65	135	72.6	---	
F	5.00	10.00	21.3	13.6	7.7	12.0	2.65	139	76.6	---	
G	5.00	10.00	21.3	13.6	7.7	12.0	2.65	139	76.6	---	

SETTLEMENT ANALYSIS OF EMBANKMENT FILL
Embankment at 21+00 (Boring TB-2)

Client:	Infrastructure Engineering, Inc.
Project:	Small Structure Replacement, Structure No. 21037
Location	206th Street over Finley Creek, Hamilton County, IN
CTL Project No.:	18050069IND

CALCULATION

Point	A	B	C	D	E	F	G	H	I
Void Ratio, $e_o = (G_s * w) / 100$	0.675	0.324	0.180	0.318	0.318	0.180	0.318		
Compression Index, $C_c* = 0.156*e_o + 0.0107$	0.116	0.061	0.050	0.050	0.050	0.050	0.050		
Compression Index, $C_r* = w / 1000$	0.025	0.003	0.007	0.007	0.007	0.007	0.007		
Overburden Pressure, $P_{o\ (psf)}$	360	1110	1669	2201	2927	3653	4439		
Over Consolidation Ratio, OCR	---	---	---	---	---	---	---		
Preconsolidation Pressure, Pc (psf)*	2000	4000	8000	8000	8000	8000	8000		
Average Blowcount, N	---	---	---	---	---	---	---		
Average Corrected Blowcount, $N1_{60}$	---	---	---	---	---	---	---		
Bearing Capacity Index, C'	---	---	---	---	---	---	---		
Half Embankment Width (B_1), feet	17.0	17.0	17.0	17.0	17.0	17.0	17.0		
Embankment Slope Width (B_2), feet	24.0	24.0	24.0	24.0	24.0	24.0	24.0		
Point Depth (Z), feet	3.00	9.25	15.00	22.50	32.50	42.50	52.50		
B_1/Z Ratio	5.7	1.8	1.1	0.8	0.5	0.4	0.3		
B_2/Z Ratio	8.0	2.6	1.6	1.1	0.7	0.6	0.5		
Influence Value of Embankment Loading, I'	0.500	0.490	0.460	0.440	0.370	0.330	0.260		
Influence of Embankment Loading I = I' x 2	1.00	0.98	0.92	0.88	0.74	0.66	0.52		
Pressure Increase, Delta P = H_f x D_f x I	780	764	718	686	577	515	406		

*Soil parameters eo, Cc, Cr, OCR and C' were estimated using FHWA-NHI-05-123 and FHWA-06-088 and consolidation testing.

SETTLEMENT ANALYSIS OF EMBANKMENT FILL
Embankment at 21+00 (Boring TB-2)

Client:	Infrastructure Engineering, Inc.
Project:	Small Structure Replacement, Structure No. 21037
Location	206th Street over Finley Creek, Hamilton County, IN
CTL Project No.:	18050069IND

CALCULATION (continued)

Equation used to calculate settlement:

Delta S = H [C_c / (1+ e_o)] log [P_F/P_o] — Normally Consolidated

Delta S = H [C_r / (1+ e_o)] log [P_F/P_o] — Overconsolidated with $P_F < P_c$

Delta S = H [C_r / (1+ e_o)] log [P_c/P_o] + H [C_c / (1+ eo)] log [P_F/Pc] — Overconsolidated with $P_o < P_c < P_F$

Delta S = H [1/C')] log [P_F/P_o] — Cohesionless soil

Point	Material Type	Layer Thickness (feet)	C_c	C_r	C'	e_o	P_o (psf)	Delta P (psf)	P_F = P_o + Delta P (psf)	Settlement Delta S (inches)	
										Longterm	Immediate
A	CL LO	6.00	0.116	0.025	---	0.675	360	780	1140	0.54	---
B	CL LO	6.50	0.061	0.003	---	0.324	1110	764	1874	0.04	---
C	LO	5.00	0.050	0.007	---	0.180	1669	718	2387	0.06	---
D	LO	10.00	0.050	0.007	---	0.318	2201	686	2887	0.08	---
E	LO	10.00	0.050	0.007	---	0.318	2927	577	3504	0.05	---
F	LO	10.00	0.050	0.007	---	0.180	3653	515	4168	0.04	---
G	LO	10.00	0.050	0.007	---	0.318	4439	406	4845	0.02	---
Estimated Total Settlement										**0.8**	**0.0**

Estimated Total Settlement = 0.8 inches **Longterm Settlement = 0.8 inches**

SETTLEMENT ANALYSIS OF EMBANKMENT FILL
Embankment at 21+00 (Boring TB-2)

Client:	Infrastructure Engineering, Inc.
Project:	Small Structure Replacement, Structure No. 21037
Location	206th Street over Finley Creek, Hamilton County, IN
CTL Project No.:	18050069IND

CALCULATION (continued)

Estimated Time of Settlement

$t_i = \frac{T_i h^2}{c_v}$ where t_i = time for i percent consolidation to take place; T_i = time factor; h = length of longest path for a particle of water; c_v = coefficient of consolidation

Point	Material Type	Layer Thickness, H (feet)	$T_{(50)}$	Longest Path, h (feet)	LL	Estimated c_v * (ft^2/day)	Consolidation Time	
							days	weeks
A	CL LO	6.00	0.197	6.00	38	0.30	24	3
B	CL LO	6.50	0.197	4.60	38	0.30	14	2
C	LO	5.00	0.197	10.40	21	0.77	28	4
D	LO	10.00	0.197	1.75	21	0.77	1	0
E	LO	10.00	0.197	4.25	21	0.77	5	1
F	LO	10.00	0.197	4.13	21	0.77	4	1
G	LO	10.00	0.197	4.13	21	0.77	4	1
Estimated Time for 50% Settlement							**4 week**	

SETTLEMENT ANALYSIS OF EMBANKMENT FILL
Embankment at 21+00 (Boring TB-2)

Client:	Infrastructure Engineering, Inc.
Project:	Small Structure Replacement, Structure No. 21037
Location	206th Street over Finley Creek, Hamilton County, IN
CTL Project No.:	18050069IND

CALCULATION (continued)

Point	Material Type	Layer Thickness, H (feet)	$T_{(70)}$	Longest Path, h (feet)	LL	Estimated c_v * (ft^2/day)	Consolidation Time	
							days	weeks
A	CL LO	6.00	0.403	6.00	38	0.30	48	7
B	CL LO	6.50	0.403	4.60	38	0.30	28	4
C	LO	5.00	0.403	10.40	21	0.77	57	8
D	LO	10.00	0.403	1.75	21	0.77	2	0
E	LO	10.00	0.403	4.25	21	0.77	9	1
F	LO	10.00	0.403	4.13	21	0.77	9	1
G	LO	10.00	0.403	4.13	21	0.77	9	1
Estimated Time for 70% Settlement							**8 weeks**	

SETTLEMENT ANALYSIS OF EMBANKMENT FILL
Embankment at 21+00 (Boring TB-2)

Client:	Infrastructure Engineering, Inc.
Project:	Small Structure Replacement, Structure No. 21037
Location	206th Street over Finley Creek, Hamilton County, IN
CTL Project No.:	18050069IND

CALCULATION (continued)

Point	Material Type	Layer Thickness, H (feet)	$T_{(90)}$	Longest Path, h (feet)	LL	Estimated c_v * (ft^2/day)	Consolidation Time	
							days	weeks
A	CL LO	6.00	0.848	6.00	38	0.30	102	15
B	CL LO	6.50	0.848	4.60	38	0.30	60	9
C	LO	5.00	0.848	10.40	21	0.77	119	17
D	LO	10.00	0.848	1.75	21	0.77	3	0
E	LO	10.00	0.848	4.25	21	0.77	20	3
F	LO	10.00	0.848	4.13	21	0.77	19	3
G	LO	10.00	0.848	4.13	21	0.77	19	3
Estimated Time for 90% Settlement							**17 weeks**	

* From Fig. 3-18 P. 3-44 of Department of The Army, EM 1110-1-1904, 1990

% Settlement	Total Longterm Settlement (inches)	Settlement		Remaining Settlement * (inches)	Remarks
		Consolidated Amount (inches)	Consolidation Time (weeks)		
50	0.8	0.4	4	0.4	OK
70	0.8	0.6	8	0.2	OK
90	0.8	0.7	17	0.1	OK

APPENDIX F

SPECIAL PROVISIONS FOR MODIFIED SUBGRADE TREATMENT

SUBGRADE TREATMENT TYPE IC, MODIFIED

The Standard Specifications are revised as follows:

SECTION 207, AFTER LINE 8, INSERT AS FOLLOWS:

207.02 Materials

Materials shall be in accordance with the following.

Chemical Modifiers..... 215.05
Coarse Aggregate, Class D or Higher,
Size No. *5, 8,* 11, 12, 53, or 73 904
Geogrid, Type IB..... 918.05(a)
Geotextile for Pavement and Subgrade ..... 918.02(c)
Water 913.01

SECTION 207, AFTER LINE 34, INSERT AS FOLLOWS:

(d) soil compaction to 100% of maximum dry density, *or*

(e) geotextile in accordance with 214 placed under aggregate No. 5, 8, and 53 in accordance with 301.

SECTION 207, AFTER LINE 88, INSERT AS FOLLOWS:

Type IC, Modified	*12 in. of subgrade constructed with 9 in. of coarse aggregate No. 53 over 3 in. of coarse aggregate No. 5 or No. 8. A Geotextile for Subgrade Type 2A shall be placed at the bottom of the aggregate. Air-cooled blast furnace slag shall not be used.*

SECTION 207, AFTER LINE 140, INSERT AS FOLLOWS:

207.05 Method of Measurement

Subgrade treatment will be measured in both cut and fill areas by the square yard per type. Chemicals for modification, excavation, aggregates, *geotextile* and geogrid materials will not be measured.

SECTION 207, AFTER LINE 163, INSERT AS FOLLOWS:

The cost of subgrade treatments including testing, sampling, aggregates for cut or at-grade areas, chemicals for modification, *geotextile*, geogrid, water, and the excavation required for the methods chosen by the Contractor shall be included in the cost of the pay item for subgrade treatment, type.

PAGE INTENTIONALLY LEFT BLANK

APPENDIX D

SMALL STRUCTURE # 21037 (BRIDGE # 311)
206TH STREET / FINLEY CREEK

PAGE INTENTIONALLY LEFT BLANK

Storm Water, Erosion, and Sediment Control Inspection Report INDOT (4-2012)

Project Information		
INDOT Lead Des Number:	**Inspection Type**	**Inspection Date:**
Contract Number:	☐ **24 hr (After a > 0.5" Event)**	**Date of Last Precipitation:**
Road/County:	☐ **Weekly** ☐ **QA/QC**	**Amount of Last Precipitation:**

Areas Inspected					
Area Type	**Inspected ✓/NA**	**Area Type**	**Inspected ✓/NA**	**Area Type**	**Inspected ✓/NA**
Disturbed Areas		Areas where Water Leaves the Project Site		Erosion Controls	
Material Storage Areas		Other:		Sediment Controls	
How was inspection conducted? (check all that apply)		☐ Windshield		☐ Walking	☐ Other _____
Stationing Inspected ☐ Entire Project		☐ Select Stations:	Sta. to Sta.	Sta. to Sta.	Sta. to Sta.

Part A: Erosion and Sediment Control Best Management Practices (BMPs) Inspected

Except for the instances listed below, all sediment and erosion controls have been inspected and were found to be in working order and do not require maintenance or corrective actions.

BMP Type (see table on page 3)	**Approximate Station**		**Survey Line: Left, Right or centerline**	**BMP Maintenance or Corrective Action Needed** Describe required corrective actions, maintenance, additions, or directions. Along with description provide image filename here for any reference pictures provided.
	From	**To**		

Part B: Additional Quantities or Additional BMPs Needed

Any additional control quantities or new BMPs not shown on the SWPPP must be approved by the PE/PS. If multiple locations are involved, identify the exact location of each addition. Justification for the measure must be provided.

BMP Type (see table on page 3)	Approximate Station		Survey Line: Left, Right or centerline	Description/Justification for the additional BMPs Along with description provide image filename here for any reference pictures provided.
	From	To		

Part C: Temporarily or Permanently Suspended Construction Activities

Where construction activities (grading, excavating, embankment filling, or other land disturbing activities have been suspended either temporarily or permanently, describe why stabilization measures were not initiated within 7 days.

BMP Type (see table on page 3)	Approximate Station		Survey Line: Left, Right or centerline	Description Along with description provide image filename here for any reference pictures provided.
	From	To		

Part D: Compliance Evaluation (check only one)

☐ With the maintenance and improvement actions noted, the areas inspected will meet the intent of the Erosion and Sediment Control Plan and INDOT contract documents and specifications related to temporary erosion and sediment control.

☐ The areas inspected are not meeting the intent and are in potential noncompliance with the Erosion and Sediment Control Plan and/or INDOT contract documents and specifications related to temporary erosion and sediment control. There is off site sedimentation and/or a high potential for off-site sedimentation on this project. (If this box is checked, complete the following "Part E: Potential Noncompliance Issues" section of this form)

Part E: Potential Noncompliance Issues

BMP Type (see table on page 3)	Approximate Station		Survey Line: Left, Right or centerline	Describe the potential noncompliance issue(s) e.g. failure to adequately inspect the project, repeated failure of a BMP, failure to install a required BMP, a visible off-site discharge of material (silt, sand, oily water, etc.), or potential off-site discharges or potential failures.
	From	To		

Part F: Inspection Certification

I certify that this document and all attachments were prepared under my direction or supervision in accordance with a system designed to assure that qualified personnel properly gather and evaluate the information submitted. Based on my inquiry of the person or persons who manage the system, or those persons directly responsible for gathering the information, the information submitted is to the best of my knowledge and belief, true, accurate, and complete.

Inspector Name Printed:	Company:	Title:	Date:

Inspector Signature: _____

If evaluating an inspection performed by another inspector, please check one of the following boxes:

☐ I concur with the inspector ☐ I do not concur with the inspector (please circle any findings that you do not agree with)

Owner Representative Name: Signature: _____

Date:

A permanent copy must be filed with the project records and be provided to INDOT or IDEM personnel according to requirements or upon request.

Table of Types of Erosion and Sediment Control Best Management Practices (BMPs)

1	Diversion Interceptor	8	Check Dam, Traversable	15	Filter Berm	22	Concrete Washout
2	Temporary Seeding	9	Slope Drain	16	Filter Sock	23	Secondary Spill Containment
3	Permanent Sod or Seed	10	Splash Pad	17	Turbidity Curtain	24	
4	Mulch (hydraulic or bonded fiber mulch)	11	Sediment Trap	18	Surface Roughening	25	
5	Straw Mulch (blown/laid)	12	Sediment Basin	19	Vegetative Filter Strip	26	
6	Manufactured Surface Protection Products	13	Retention Pond	20	Inlet Protection	27	
7	Check Dam	14	Silt Fence	21	Construction entrance/exit	28	

cc: Prime Contractor Superintendent (add Prime Contractor Owner/President when appropriate)
INDOT Project Engineer (add INDOT Area Engineer when appropriate)
INDOT District E&SC Specialist (add INDOT Central Office E&SC Specialist when appropriate)

Instructions for the Contractor's representative: Fill out this document completely including filling out the Project Information, Areas Inspected and Parts A, B, C, D, E and F the day of your field investigation and put it on file for the project. Submit the signed document to the INDOT project representative the same day. Always provide pictures to document site conditions observed in your report.

Instructions for INDOT's representative:

- When you receive a completed and signed inspection report as completed by the contractor, visit the site within 24 hours of receipt of the contractor's inspection to verify the contractor's findings. If you concur with the contractor's inspection, fill out part F and sign as the INDOT representative. If you don't concur with the contractor's inspection, fill out parts E, F and circle any areas where you believe the inspection misrepresented the site's state of compliance with the intent of INDOT standards. If possible, provide pictures to document site conditions observed. Upon completion, sign under Part F, put it on file with the project and copy the prime contractor's representative.

- If you are completing this as an evaluation of an INDOT project without regard to the contractor's inspection, fill out all parts of the form including part D, E and sign as the inspector in part F. Always provide pictures to document site conditions observed in your report. Provide a copy to the INDOT PE/PS for the project and the Area Engineer. It is recommended that the inspection report be provided to the contractor immediately for their information (not their concurrence). It is also recommended another INDOT rep. visit the site within 24 hours to verify the inspection for their records and sign concurrence or non-concurrence in Part F.

Additional Explanation:

- Part A – Only put BMPs in Part A that were deemed to be in need of maintenance or alteration. Do not provide a list of every BMP inspected on the project. The intent is to document only those which were deemed in need of maintenance or alteration in order to continue to meet the intent of the measure at the location.

- Part B – Only put additional BMPs not yet installed on the project site in Part B. These can be BMPs intended for a different construction phase of the project or BMPs planned for other areas of the project that make sense to be deployed at additional locations. This is also where recommendations of measures would occur that identify new BMPs not in the contract documents.

- Part C – This is a list of known bare/exposed areas of the project and the justification why they are remaining bare or exposed during the review period despite a lack of construction activities. This especially includes any areas that are or are planned to be exposed for greater than 7 days without immediate plans to stabilize.

- Part D – Checking that the project is not in compliance with the intent of INDOT standards indicates that despite the additional maintenance measures and BMPs, the project's oversight is failing to ensure that sediment is prevented from leaving the project site or has the potential to leave the project site.

- Part E – List principles of storm water or erosion and sediment control that appear to be lacking on the project which demonstrate the lack of oversight of the project by qualified personnel.

- Part F – The "I certify" signature of the inspector is important in order to document whose opinion is being provided by the filling out of this form.

Additional Information for Part __

BMP Type (see table on page 3)	Approximate Station		Left, Right or centerline	Description
	From	To		

205-R-706 STORMWATER MANAGEMENT

(Adopted 10-17-19)

The Standard Specifications are revised as follows:

SECTION 205, BEGIN LINE 692, DELETE AND INSERT AS FOLLOWS:

Payment will be made under:

Pay Item	**Pay Unit Symbol**	**Established Price**
Diversion Interceptor Type C	LFT	~~$20.00~~ *$22.50*
Fertilizer	TON	~~$725.00~~ *$775.00*
Filter Sock	LFT	~~$5.00~~ *$5.50*
Manufactured Surface Protection Product	SYS	~~$1.25~~ *$1.35*
Mobilization and Demobilization for Surface Stabilization	EACH	~~$650.00~~ *$700.00*
No. 2 Stone	TON	~~$25.00~~ *$30.00*
Sediment, Remove	CYS	~~$20.00~~ *$22.00*
Splashpad	TON	~~$55.00~~ *$60.00*
Standard Metal End Section	EACH	~~$340.00~~ *$365.00*
Stormwater Management Budget	DOL	
SWQCP Preparation and Implementation, Level 1	LS	
SWQCP Preparation and Implementation, Level 2	LS	
Temporary Check Dam, Revetment Riprap	TON	~~$50.00~~ *$65.00*
Temporary Check Dam, Traversable	LFT	~~$15.00~~ *$16.00*
Temporary Filter Berm	LFT	~~$15.00~~ *$16.00*
Temporary Filter Stone	TON	~~$40.00~~ *$45.00*
Temporary Geotextile	SYS	~~$2.50~~ *$2.75*
Temporary Inlet Protection	EACH	~~$100.00~~ *$110.00*
Temporary Mulch Stabilization	SYS	~~$0.25~~ *$0.30*
Temporary Mulch	TON	~~$400.00~~ *$425.00*
Temporary Revetment Riprap	TON	~~$50.00~~ *$60.00*
Temporary Sediment Basin	EACH	~~$3,000.00~~ *$3,200.00*
Temporary Sediment Trap	TON	~~$40.00~~ *$42.50*
Temporary Seed	LBS	~~$2.50~~ *$2.75*
Temporary Silt Fence	LFT	~~$2.00~~ *$2.15*
Temporary Slope Drain	LFT	~~$20.00~~ *$21.50*
Weekly Inspection	EACH	~~$400.00~~ *$425.00*

206-R-719 DEWATERING

(Adopted 05-21-20)

Description

The Contractor shall design, furnish, install, test, operate, monitor, and maintain a dewatering system of sufficient scope, size, and capacity to prevent groundwater flow into excavations and allow water and construction operations to proceed on dry, stable subgrades.

Materials

Materials shall be in accordance with the following requirements.

Sediment filter bags shall consist of nonwoven, needle punched polypropylene geotextile consisting of strong, rot resistant, chemically stable long-chain synthetic polymer materials which are dimensionally stable relative to each other including the selvedges. The plastic yarn or fibers used in the geotextile shall consist of at least 85% by weight of polyolefins, polyesters, or polyamides. The plastic yarn or fibers shall have stabilizers and inhibitors added to the base plastic to make the filaments resistant to deterioration due to ultraviolet and heat exposure.

The geotextile shall be in accordance with the physical requirements as follows:

PROPERTY	TEST METHOD	REQUIREMENTS*
Tensile Strength	Grab Tensile Strength, ASTM D 4632	200 lb
Elongation	Grab Tensile Strength, ASTM D 4632	15%
Mullen Burst	ASTM D 3786	350 psi
Seam Strength	Grab Tensile Strength, ASTM D 4632	180 lb
Puncture Strength	ASTM D 4833	110 lb
Trapezoid Tear	ASTM C 4533	80 lb
Ultraviolet Degradation at 150 h	ASTM D 4355	70% strength retained
Apparent Opening Size, AOS	ASTM D 4751	No. 80 standard sieve or filter
Flow Rate	ASTM D 4491	80 gal./min/sq ft
* The value in the weaker principal direction shall be used. All numerical values represent minimum average roll value and test results from any sampled roll in a lot shall meet or exceed the minimum values in the table. Lots shall be sampled according to ASTM D 4354.		

The size of the filter bag shall be appropriate for the site conditions.

Construction Requirements

Dewatering operations shall be maintained to ensure stability of excavations and constructed slopes and that the excavation does not flood. Surface water shall be prevented from entering excavations by grading, dikes, or other means. Water from work area dewatering pumps shall be discharged through a sediment filter bag, or other approved device. The filter bag shall be located such that discharge water flows back into a stabilized area downstream of the work area. Dewatering shall be accomplished without damaging existing buildings or structures adjacent to excavation. The dewatering system shall be removed when no longer needed.

The Contractor shall comply with water disposal requirements of authorities having jurisdiction.

The operation of the dewatering pumps and the condition and efficiency of the sediment filter bags shall be closely monitored. Sediment filter bags which do not perform properly or reach their capacity shall be replaced immediately.

The Contractor shall dispose of water removed by dewatering in a manner that avoids endangering public health, property, and portions of work under construction or completed. Disposal of water shall not inconvenience others. Sumps, sedimentation tanks, flow-control devices, and temporary sediment and erosion control shall be provided in accordance with 205 and as required by authorities having jurisdiction. Sediment in filter bags shall be removed once it has accumulated to the design volume and be disposed of in accordance with 202.

Method of Measurement

Dewatering will not be measured, regardless of how many times the system is moved, replaced or relocated. Sediment filter bags will not be measured regardless of the number of times a day a filter bag may become filled and replaced.

Basis of Payment

Dewatering shall be considered incidental to the work being performed and shall be included in the cost of other items.

The cost of the pump, materials, installation, inspection, maintenance, sediment filter bags, filter stone, secondary containment, removal and proper disposal, and all necessary incidentals shall be included in the cost of other items.

207-R-687 SUBGRADE TREATMENT

(Revised 02-20-20)

The Standard Specifications are revised as follows:

SECTION 207, BEGIN LINE 9, DELETE AND INSERT AS FOLLOWS:

207.02 Materials

Materials shall be in accordance with the following:

Chemical Modifiers 215.02
Coarse Aggregate, Class D or Higher,
Size No. 5, 8, 43, 53, or 73 904
Geogrid, Type IB 918.05
Geocell Confining System 214
Geotextile for Pavement and Subgrade..... 918.02(c)
Water 913.01

Air-cooled blast furnace slag shall not be used for subgrade treatment Types ID, IV, and IVA.

~~Soils containing greater than 3% by dry weight organic material, or with a maximum dry density of less than 100 pcf, or with liquid limit of greater than 50, or with a soluble sulfate content greater than 1,000 ppm, will not be allowed within the specified thickness of the subgrade treatment in cut sections and will not be allowed within 24 in. of the finished subgrade elevation in fill sections. Density will be determined in accordance with AASHTO T 99 or ITM 512 and organic content will be determined in accordance with AASHTO T 267. Liquid limits will be determined in accordance with AASHTO T 89. Sulfate content will be determined in accordance with ITM 510.~~

Soil Property	*Test Method*	*Requirements*
Dry Weight Organic Material	*AASHTO T 267*	*≤ 3%*
Max Dry Density	*AASHTO T 99*	*≥ 100 pcf*
Liquid Limit	*AASHTO T 89*	*≤ 50*
Soluble Sulfate	*ITM 510*	*≤ 1000 ppm*
Note: *Only soils meeting these requirements will be allowed within the specified thickness of the subgrade treatment in cut sections. Only soils meeting these requirements will be allowed within 24 in. of the finished subgrade elevation in fill sections.*		

CONSTRUCTION REQUIREMENTS

207.03 Construction Requirements

(a) Subgrade Construction Methods

The subgrade shall be constructed uniformly transversely across the width of the pavement including shoulders or curbs unless shown otherwise on the plans, by one of the following methods:

(a) chemical modification in accordance with 215;

(b) aggregate No. 53 in accordance with 301;

(c) geogrid in accordance with 214 placed under aggregate No. 53 in accordance with 301, or

(d) soil compaction to 100% of maximum dry density~~.~~*;*

(e) geotextile in accordance with 214 placed under aggregate No. 5, 8, and 53 in accordance with 301.

Longitudinally, the treatment may vary depending on the method of construction.

SECTION 207, BEGIN LINE 71, DELETE AND INSERT AS FOLLOWS:

207.04 Subgrade Treatment Types

The subgrade treatment type shall be as specified on the contract plans. If required, the subgrade foundation shall be corrected as directed by the Engineer prior to subgrade treatment.

Type	Subgrade Description
I	24 in. of soil compacted in accordance with 203.23
IA	[blank]
IB*C*	14 in. chemical soil modification *using cement*
IBL	*14 in. chemical soil modification using lime*
IC	12 in. coarse aggregate No. 53 in accordance with 301
ID	*12 in. coarse aggregate with Type 2B geotextile in accordance with 918.02(c)*
II	6 in. coarse aggregate No. 53 in accordance with 301
~~IIA~~	~~8 in. chemical soil modification~~
III	In-place compaction in accordance with 203.23
IV	12 in. coarse aggregate No. 53 with Type IB geogrid in accordance with 214
IVA	12 in. coarse aggregate with Geocell confining system in accordance with 214
V	3 in. of subgrade excavated and replaced with 3 in. coarse aggregate No. 53

Type ID subgrade treatment shall be constructed with 9 in. of coarse aggregate No. 53 over 3 in. of coarse aggregate No. 5 or No. 8. Geotextile Type 2B in accordance with 918.02(c) shall be placed above and below the layer of No. 5 or No. 8 coarse aggregate.

In areas where shallow utilities are encountered or chemical modification is not allowed, the Contractor may submit a request to the Engineer to substitute Type IC for Type IB*C or Type IBL*.

SECTION 207, BEGIN LINE 104, DELETE AND INSERT AS FOLLOWS:

Proofrolling shall be performed in accordance with 203.26. ~~The proof rolling shall cover the entire subgrade surface. The maximum allowable deflection or rutting in subgrade shall not be greater than 1/2 in.~~

207.05 Method of Measurement

Subgrade treatment will be measured in both cut and fill areas by the square yard per type. Chemicals for *soil* modification *using cement or lime*, excavation, aggregates, *geotextile,* and geogrid materials will not be measured.

The undercutting of rock, where encountered, will be measured in accordance with 203.27(b).

207.06 Basis of Payment

The accepted quantities of subgrade treatment will be paid for at the contract unit price per square yard per type, complete in place. In areas where shallow utilities are encountered or the Contractor elects to use Type IC for Type IB*C or Type IBL*, payment will be made at the price of Type IB*C or Type IBL*.

The undercutting of rock, where encountered, will be paid for in accordance with 203.28.

Payment will be made under:

Pay Item	**Pay Unit Symbol**
Subgrade Treatment, Type _____	SYS

The cost of subgrade treatments including testing, sampling, aggregates, chemicals for *soil* modification *with cement or lime*, geogrid, geotextile and geocell confining system, coarse aggregate for subgrade Type IC, *Type ID,* Type II, Type IV, Type IVA, Type V, water, and the excavation required, shall be included in the cost of the pay item.

The cost of excavation and grading of existing railroad ballast and railroad bed material shall be included in the cost of subgrade treatment, Type V.

Where conditions exist below the specified subgrade compaction depth that prevent achieving the specified compaction, payment for correcting such conditions will be made based on the directed method of treatment.

SUBGRADE TREATMENT TYPE IC, MODIFIED

The Standard Specifications are revised as follows:

SECTION 207, AFTER LINE 8, INSERT AS FOLLOWS:

207.02 Materials

Materials shall be in accordance with the following.

Chemical Modifiers..... 215.05
Coarse Aggregate, Class D or Higher,
Size No. *5, 8,* 11, 12, 53, or 73 904
Geogrid, Type IB..... 918.05(a)
Geotextile for Pavement and Subgrade ..... 918.02(c)
Water 913.01

SECTION 207, AFTER LINE 34, INSERT AS FOLLOWS:

(d) soil compaction to 100% of maximum dry density, *or*

(e) geotextile in accordance with 214 placed under aggregate No. 5, 8, and 53 in accordance with 301.

SECTION 207, AFTER LINE 88, INSERT AS FOLLOWS:

Type IC, Modified	*12 in. of subgrade constructed with 9 in. of coarse aggregate No. 53 over 3 in. of coarse aggregate No. 5 or No. 8. A Geotextile for Subgrade Type 2A shall be placed at the bottom of the aggregate. Air-cooled blast furnace slag shall not be used.*

SECTION 207, AFTER LINE 140, INSERT AS FOLLOWS:

207.05 Method of Measurement

Subgrade treatment will be measured in both cut and fill areas by the square yard per type. Chemicals for modification, excavation, aggregates, *geotextile* and geogrid materials will not be measured.

SECTION 207, AFTER LINE 163, INSERT AS FOLLOWS:

The cost of subgrade treatments including testing, sampling, aggregates for cut or at-grade areas, chemicals for modification, *geotextile*, geogrid, water, and the excavation required for the methods chosen by the Contractor shall be included in the cost of the pay item for subgrade treatment, type.

APPENDIX E

SMALL STRUCTURE # 21037 (BRIDGE # 311)
206TH STREET / FINLEY CREEK

PAGE INTENTIONALLY LEFT BLANK

Date: 10/31/2019

Subject:

Utility Relocation Work Plan for:	Citizens Wastewater of Westfield
Facility Type:	Sanitary Sewers

Section 1: General Information

A. INDOT/LPA Project Information

1.	Hamilton Co. Project Number:	SS 21037 / BR 311
2.	Route Number:	
3.	Location:	206th Street over Finley Creek
4.	Work Type:	Bridge Construction
5.	Letting Date:	
6.	Date Work Plan Needed	
7.	Target Date for Utility to be out of conflict with INDOT Project	

B. Utility Designated Contact – Information

1.	Designated Contact Name:	David A. Clark, P.E.
2.	Office telephone:	317-429-3993
3.	Mobile telephone:	
4.	Email address:	dclark@citizensenergygroup.com
5.	Agency name	Citizens Water of Westfield
6.	Address:	2150 Dr. Martin Luther King, Jr. St Bldg 1b
7.	City, State, Zip Code:	Indianapolis, IN 46202
8.	Construction Emergency Contact:	
	Name:	Brandon Carter
	Number:	317-850-9055

C. By signing here, the Utility has determined to the best of their ability that they do not have facilities within the project area:

Signature of Utility Representative

David A. Clark, P.E. **10/31/19**

Print Name Date

Note: A signature by the utility representative at item "(C)" fulfills the requirement to complete the rest of this form and affirms their contact information above is correct.

D. INDOT/LPA Utility Coordinator Contact Information

1.	Utility Coordinator Name:	Nick Bergman
2.	Office Telephone:	(317)-202-1285
3.	Mobile Telephone:	
4.	Email Address:	nbergman@infrastructure-eng.com
5.	Agency Name:	Infrastructure Engineering Incorporated
6.	Address:	201 S. Capitol Avenue
7.	City, State, Zip Code	Indianapolis, Indiana 46225

Section 2: A narrative description of the facility relocation that will be required. [IAC 13-3-3(c)]

A. Describe what types of existing active and inactive facilities are present.

B. Describe the location of existing active and inactive facilities.

C. Describe what will be done with existing active and inactive facilities.

D. Describe the details of the proposed new facilities.

E. Describe the proposed location of the new facilities.

F. By signing here, the Utility has determined to the best of their ability that they have facilities within the project area and the facilities are not in conflict with the project based upon the plans received on **<Enter Date Received Plans>**

_____ _____

Signature of Utility Representative Print Name Date

Note: A signature by the utility representative at item "(F)" fulfills the requirement to complete the rest of this form and affirms their contact information above is correct.

Section 3: A statement whether the facility relocation is or is not dependent on the acquisition of additional property interests with a description of that work. [IAC 13-3-3(c) (2) (B)]

Section 4: A statement whether the utility is or is not willing to allow the INDOT contractor to do the required work as part of the highway contract. [IAC 13-3-3(c) (3)]

Section 5: From the date the work plan is approved by both parties; please provide the Utility's pre-construction scheduling information. [IAC 13-3-3(c) (4), IAC 13-3-3(c) (5)]

A.	The expected lead time in calendar days to obtain required permits:	Enter Total Days
B.	The expected lead time in calendar days to obtain materials:	Enter Total Days
C.	The expected lead time in calendar days to schedule work crews:	Enter Total Days
D.	If the contractor is being selected by competitive bid what is the date of selection?	Enter Bid Date
E.	The expected lead time in calendar days to obtain new property interests:	Enter Days
F.	The earliest date when the utility could begin to implement the pre-construction activities of the work plan:	Enter Date
G.	The total number of calendar days for pre-construction activities: (accounting for concurrent activities)	Enter Total Days

Section 6: The Utility Construction Scheduling Information. [IAC 13-3-3(c) (4), IAC 13-3-3(c) (5)]

A. A statement whether the facility relocation is or is not dependent on work to be done by another utility with a description of that work. [IAC 13-3-3(c)(2)(A)(i)]

1. Utility A, with a description of the required work.

2. Utility B, with a description of the required work.

3. Utility C, with a description of the required work.

B. A statement whether the facility relocation is or is not dependent on work to be done by the department or the department's contractor with a description of that work. [IAC 13-3- 3(c)(2)(A)(ii)]

1. Work item A

2. Work item B

3. Work item C

C. How many calendar days after the events identified in Sec 6 A and B are completed can the utility begin construction: Enter Total Days

D. The number of calendar days to complete the relocation work: Enter Total Relocation Days

Section 7: A drawing of sufficient detail with station, offset, elevations, and scale to show the proposed location of the facility relocation, which takes precedence over the narrative description of the work, needs to be on INDOT Construction drawings. [IAC 13-3-3(c) (6)]. Plans must be attached to this Work Plan Document.

Section 8: For each work plan the utility shall include a cost estimate for the facility relocation. For reimbursable work the estimate will identify betterment and salvage which is not reimbursable. [IAC 13-3-3(d)]

Section 9: For work the utility is entitled to be compensated by the Department, the work plan shall include documentation of property interests and compensable land rights. [IAC 13-3-3(d)]

Section 10: The implementation of this approved work plan is dependent upon the issuance of: (a notice to proceed will be provided when items in Section 6 are accomplished)

Items Completed	Yes	Not Applicable
An executed reimbursement agreement with INDOT/LPA:	☐	☐
A relocation permit from INDOT/LPA:	☐	☐

(Note: Double-click on box in Yes or NA to mark it with an "X")

_____ _____

Signature of Utility Representative Date

_____

Utility Representative Name Printed

INDOT/LPA use only below this point ---------- INDOT/LPA use only below this point

The following sections are to be used by INDOT personnel to review the utility relocation work plan.

Section 11: The Department shall review the work plan to ensure that it: [IAC 13-3-3(e)]

Description	Yes	No	Initials
(1.a) is compatible with department permit requirements	☐	☐	
(1.b) is compatible with the project plans	☐	☐	
(1.c) is compatible with the construction schedule	☐	☐	
(1.d) is compatible with other utility relocation work plans	☐	☐	
(2.a) has reasonable relocation scheme	☐	☐	
(2.b) has a reasonable cost for compensable work	☐	☐	

(**Note**: Double-click on box under Yes or No to mark it with an "X")

Comments on any sections (1.a – 2.b) that were marked No:

12/09/2019

Utility Coordinator Signature

Date

Nick Bergman

Utility Coordinator Name Printed

Section 12: Approved Work Plan. [IAC 13-3-3(f)]

I have reviewed the work plan and found it acceptable.

April 4, 2020

Project Manager Signature (LPA Project – ERC Signature)

Date

Faraz Khan

Project Manager Name Printed (LPA Project – ERC Name Printed)

Date: 10/31/2019

Subject:

Utility Relocation Work Plan for:	Citizens Water of Westfield
Facility Type:	Water

Section 1: General Information

A. INDOT/LPA Project Information

1.	Hamilton Co. Project Number:	SS 21037 / BR 311
2.	Route Number:	
3.	Location:	206th Street over Finley Creek
4.	Work Type:	Bridge Construction
5.	Letting Date:	
6.	Date Work Plan Needed	
7.	Target Date for Utility to be out of conflict with INDOT Project	

B. Utility Designated Contact – Information

1.	Designated Contact Name:	David A. Clark, P.E.
2.	Office telephone:	317-429-3993
3.	Mobile telephone:	
4.	Email address:	dclark@citizensenergygroup.com
5.	Agency name	Citizens Water of Westfield
6.	Address:	2150 Dr. Martin Luther King, Jr. St Bldg 1b
7.	City, State, Zip Code:	Indianapolis, IN 46202
8.	Construction Emergency Contact:	
	Name:	Brandon Carter
	Number:	317-850-9055

C. By signing here, the Utility has determined to the best of their ability that they do not have facilities within the project area:

Signature of Utility Representative

David A. Clark, P.E. **10/31/19**

Print Name Date

Note: A signature by the utility representative at item "(C)" fulfills the requirement to complete the rest of this form and affirms their contact information above is correct.

D. INDOT/LPA Utility Coordinator Contact Information

1.	Utility Coordinator Name:	Nick Bergman
2.	Office Telephone:	(317)-202-1285
3.	Mobile Telephone:	
4.	Email Address:	nbergman@infrastructure-eng.com
5.	Agency Name:	Infrastructure Engineering Incorporated
6.	Address:	201 S. Capitol Avenue
7.	City, State, Zip Code	Indianapolis, Indiana 46225

Section 2: A narrative description of the facility relocation that will be required. [IAC 13-3-3(c)]

A. Describe what types of existing active and inactive facilities are present.

B. Describe the location of existing active and inactive facilities.

C. Describe what will be done with existing active and inactive facilities.

D. Describe the details of the proposed new facilities.

E. Describe the proposed location of the new facilities.

F. By signing here, the Utility has determined to the best of their ability that they have facilities within the project area and the facilities are not in conflict with the project based upon the plans received on **<Enter Date Received Plans>**

_____ _____

Signature of Utility Representative Print Name Date

Note: A signature by the utility representative at item "(F)" fulfills the requirement to complete the rest of this form and affirms their contact information above is correct.

Section 3: A statement whether the facility relocation is or is not dependent on the acquisition of additional property interests with a description of that work. [IAC 13-3-3(c) (2) (B)]

Section 4: A statement whether the utility is or is not willing to allow the INDOT contractor to do the required work as part of the highway contract. [IAC 13-3-3(c) (3)]

Section 5: From the date the work plan is approved by both parties; please provide the Utility's pre-construction scheduling information. [IAC 13-3-3(c) (4), IAC 13-3-3(c) (5)]

A.	The expected lead time in calendar days to obtain required permits:	Enter Total Days
B.	The expected lead time in calendar days to obtain materials:	Enter Total Days
C.	The expected lead time in calendar days to schedule work crews:	Enter Total Days
D.	If the contractor is being selected by competitive bid what is the date of selection?	Enter Bid Date
E.	The expected lead time in calendar days to obtain new property interests:	Enter Days
F.	The earliest date when the utility could begin to implement the pre-construction activities of the work plan:	Enter Date
G.	The total number of calendar days for pre-construction activities: (accounting for concurrent activities)	Enter Total Days

Section 6: The Utility Construction Scheduling Information. [IAC 13-3-3(c) (4), IAC 13-3-3(c) (5)]

A. A statement whether the facility relocation is or is not dependent on work to be done by another utility with a description of that work. [IAC 13-3-3(c)(2)(A)(i)]

1. Utility A, with a description of the required work.

2. Utility B, with a description of the required work.

3. Utility C, with a description of the required work.

B. A statement whether the facility relocation is or is not dependent on work to be done by the department or the department's contractor with a description of that work. [IAC 13-3- 3(c)(2)(A)(ii)]

1. Work item A

2. Work item B

3. Work item C

C. How many calendar days after the events identified in Sec 6 A and B are completed can the utility begin construction: Enter Total Days

D. The number of calendar days to complete the relocation work: Enter Total Relocation Days

Section 7: A drawing of sufficient detail with station, offset, elevations, and scale to show the proposed location of the facility relocation, which takes precedence over the narrative description of the work, needs to be on INDOT Construction drawings. [IAC 13-3-3(c) (6)]. Plans must be attached to this Work Plan Document.

Section 8: For each work plan the utility shall include a cost estimate for the facility relocation. For reimbursable work the estimate will identify betterment and salvage which is not reimbursable. [IAC 13-3-3(d)]

Section 9: For work the utility is entitled to be compensated by the Department, the work plan shall include documentation of property interests and compensable land rights. [IAC 13-3-3(d)]

Section 10: The implementation of this approved work plan is dependent upon the issuance of: (a notice to proceed will be provided when items in Section 6 are accomplished)

Items Completed	Yes	Not Applicable
An executed reimbursement agreement with INDOT/LPA:	☐	☐
A relocation permit from INDOT/LPA:	☐	☐

(Note: Double-click on box in Yes or NA to mark it with an "X")

_____ _____

Signature of Utility Representative Date

_____

Utility Representative Name Printed

INDOT/LPA use only below this point ---------- INDOT/LPA use only below this point

The following sections are to be used by INDOT personnel to review the utility relocation work plan.

Section 11: The Department shall review the work plan to ensure that it: [IAC 13-3-3(e)]

Description	Yes	No	Initials
(1.a) is compatible with department permit requirements	☐	☐	
(1.b) is compatible with the project plans	☐	☐	
(1.c) is compatible with the construction schedule	☐	☐	
(1.d) is compatible with other utility relocation work plans	☐	☐	
(2.a) has reasonable relocation scheme	☐	☐	
(2.b) has a reasonable cost for compensable work	☐	☐	

(**Note**: Double-click on box under Yes or No to mark it with an "X")

Comments on any sections (1.a – 2.b) that were marked No:

Utility Coordinator Signature

Date

Utility Coordinator Name Printed

Section 12: Approved Work Plan. [IAC 13-3-3(f)]

I have reviewed the work plan and found it acceptable.

Project Manager Signature (LPA Project – ERC Signature)

April 2, 2020

Date

Faraz Khan

Project Manager Name Printed (LPA Project – ERC Name Printed)

Date: **December 3, 2019**

Subject:

Utility Relocation Work Plan for:	**Duke Energy**
Facility Type:	**Electric - Distribution**

Section 1: General Information

A. HAMILTON COUNTY Project Information

1.	Des Number.:	**NA**
2.	Route Number:	**206th Street**
3.	Location:	**500' East of Centennial Rd to 1,100' west of Lamong Rd.**
4.	Work Type:	**Bridge Replacement**
5.	Letting Date:	**12/12/2019**
6.	Date Work Plan Needed:	**1/06/2020**
7.	Target Date for Utility to be out of conflict with INDOT Project:	**TBD**
	Intermediate Phase:	**NA**
	Intermediate Phase:	**NA**

B. Utility Designated Contact – Information

1.	Designated Contact Name:	**Dan Benson**
2.	Office telephone:	**317-776-5340**
3.	Mobile telephone:	**317-315-4681**
4.	Email address:	**Dan.Benson@duke-energy.com**
5.	Agency name:	**Duke Energy**
6.	Address:	**100 S. Mill Creek Rd.**
7.	City, State, Zip Code:	**Noblesville, IN 46062**
8.	Construction Emergency Contact:	
	Name:	**Dan Benson**
	Number:	**317-315-4681**

**** For Outage and Damage Issues please contact 1-800-521-2232 ****

C. By signing here, the Utility has determined to the best of their ability that they do not have facilities within the project area:

Signature of Utility Representative Print Name Date

Note: A signature by the utility representative at item "(C)" fulfills the requirement to complete the rest of this form and affirms their contact information above is correct

D. HAMILTON COUNTY Utility Coordinator Contact Information

1.	Utility Coordinator Name:	**Nick Bergman**
2.	Office Telephone:	**317-202-1285**
3.	Mobile Telephone:	**219-242-4319**
4.	Email Address:	**nbergman@infrastructure-eng.com**
5.	Agency Name:	**Infrastructure Engineering, Inc.**
6.	Address:	**201 S. Capitol Avenue, Suite 490**
7.	City, State, Zip Code	**Indianapolis, IN 46225**

Section 2: A narrative description of the facility relocation that will be required. [IAC 13-3-3(c)]

DESCRIBE IN DETAIL

A. Describe what types of existing active and inactive facilities are present.

There is an existing 3Ø/12kV overhead pole line that runs along the south side of W. 206th Street. There are multiple service taps that are overhead and underground within the project limits.

Duke Energy is unable to confirm whether or not there are any underground, inactive Duke Energy facilities present. Regardless, any such inactive facilities should be considered abandoned in place, and therefore, subject to neither removal nor preservation by Duke Energy.

B. Describe the location of existing active and inactive facilities.

There is an existing 3Ø/12kV overhead pole line that runs along the south side of W. 206th Street. There are multiple service taps that are overhead and underground within the project limits.

Duke Energy is unable to confirm whether or not there are any underground, inactive Duke Energy facilities present. Regardless, any such inactive facilities should be considered abandoned in place, and therefore, subject to neither removal nor preservation by Duke Energy.

C. Describe what will be done with existing active and inactive facilities.

The existing overhead pole line will remain on the south side of W. 206th Street and relocated back to the new ROW, and any underground that is inactive will be abandoned in place.

Duke Energy is unable to confirm whether or not there are any underground, inactive Duke Energy facilities present. Regardless, any such inactive facilities should be considered abandoned in place, and therefore, subject to neither removal nor preservation by Duke Energy.

PLEASE REFER TO THE OSHA WEBSITE FOR ALL CLEARANCE REQUIREMENTS BASED ON THE VOLTAGE OF OUR LINES LISTED ABOVE.
http://www.osha.gov/pls/oshaweb/owadisp.show_document?p_table=STANDARDS&p_id=19

WARNING: ANY ORANGE OR YELLOW COVER-UP THAT DUKE ENERGY WOULD PLACE ON THE DISTRIBUTION LINE WOULD BE FOR VISUAL IDENTIFICATION ONLY AND WILL NOT PROTECT AGAINST THE TRAVEL OF ELECTRICTY, THEREFORE ALL WIRES WOULD BE CONSIDERED BARE, UNINSULATED, AND ENERGIZED AT ALL TIMES.

IF THE CONTRACTOR WOULD LIKE VISUAL COVER INSTALLED ON THE DISTRIBUTION WIRES, THEY WILL NEED TO CONTACT THE DUKE ENERGY CALL CENTER FOR SCHEDULING AT 1.800.521.2232, MONDAY THROUGH FRIDAY FROM 7A TO 7P OR ON SATURDAY FROM 8A TO 1P.

D. Describe the details of the proposed new facilities.

- **The existing pole at approximately STA 16+00 will be changed out in place, with a 15ft anchor for down guys, to accommodate the slight angle to the west.**
- **At approximately STA 15+00, New Pole 1 will be installed within 3ft of the new ROW.**
- **At approximately STA 13+50, New Pole 2 will be installed within 3ft of the new ROW and will splice into the existing service line on private property.**
- **At approximately STA 11+50, New Pole 3 will be installed within 5ft of the new ROW**
- **At approximately STA 10+00, New Pole 4 will be installed within 5ft of the new ROW**
- **At approximately STA 8+75, New Pole 5 will be installed within 3ft of the new ROW**
- **At approximately STA 7+50, New Pole 6 will be installed within 3ft of the new ROW**
- **At approximately STA 6+75, Pole 074-834 will be changed out in place, with a 15ft anchor for down guys to support the pole for the span to the west.**
- **See "Exhibit A"**

E. Describe the proposed location of the new facilities.

- **The existing pole at approximately STA 16+00 will be changed out in place, with a 15ft anchor for down guys, to accommodate the slight angle to the west.**
- **At approximately STA 15+00, New Pole 1 will be installed within 3ft of the new ROW.**
- **At approximately STA 13+50, New Pole 2 will be installed within 3ft of the new ROW and will splice into the existing service line on private property.**
- **At approximately STA 11+50, New Pole 3 will be installed within 5ft of the new ROW**
- **At approximately STA 10+00, New Pole 4 will be installed within 5ft of the new ROW**
- **At approximately STA 8+75, New Pole 5 will be installed within 3ft of the new ROW**
- **At approximately STA 7+50, New Pole 6 will be installed within 3ft of the new ROW**
- **At approximately STA 6+75, Pole 074-834 will be changed out in place, with a 15ft anchor for down guys to support the pole for the span to the west.**
- **See "Exhibit A"**

F. By signing here, the Utility has determined to the best of their ability that they have facilities within the project area and the facilities are not in conflict with the project based upon the plans received on **<Enter Date Received Plans>**

Signature of Utility Representative	Print Name	Date

Note: A signature by the utility representative at item "(F)" fulfills the requirement to complete the rest of this form and affirms their contact information above is correct.

Section 3: A statement whether the facility relocation is or is not dependent on the acquisition of additional property interests with a description of that work. [IAC 13-3-3(c) (2) (B)]

(A) Duke Energy must have acquired all ROW, RR, State or Federal permits before relocation construction begins.
(B) Duke Energy must have acquired all private "possessory rights" needed for the approved relocation plan before relocation construction begins.
(C) Duke Energy will not be acquiring easements for the said project.

Section 4: A statement whether the utility is or is not willing to allow the INDOT contractor to do the required work as part of the highway contract. [IAC 13-3-3(c) (3)]

Duke Energy Indiana is not willing to have a HAMILTON COUNTY contractor perform the required relocation.

Section 5: From the date the work plan is approved by both parties; please provide the Utility's pre-construction scheduling information. [IAC 13-3-3(c) (4), IAC 13-3-3(c) (5)]

A.	The expected lead time in calendar days to obtain required permits:	**NA**
B.	The expected lead time in calendar days to obtain materials:	**90 Days**
C.	The expected lead time in calendar days to schedule work crews:	**60 Days (Minimum)**
D.	If the contractor is being selected by competitive bid what is the date of selection?	**Not Applicable**
E.	The expected lead time in calendar days to obtain new property interests:	**HAMILTON COUNTY to obtain all ROW**
F.	The earliest date when the utility could begin to implement the pre-construction activities of the work plan:	**Material Reservation Contingent on Work Plan Approval. Scheduling Contingent on Notice to Proceed.**
G.	The total number of calendar days for pre-construction activities: (accounting for concurrent activities)	**90 Days**

Section 6: The Utility Construction Scheduling Information. [IAC 13-3-3(c) (4), IAC 13-3-3(c) (5)]

A. A statement whether the facility relocation is or is not dependent on work to be done by another utility with a description of that work. [IAC 13-3-3(c)(2)(A)(i)]

The removal of Duke Energy's pole(s) is dependent upon the removal of attachers to our poles. The attachers must remove their facilities before the existing poles can be removed. The existing attachers to our poles on this project are:

(1) TELE, with a description of the required work:
Contact all the onsite utilities for their proposed relocation plans

(2) CATV, with a description of the required work:
Contact all the onsite utilities for their proposed relocation plans

(3) FIBER(S), with a description of the required work:
Contact all the onsite utilities for their proposed relocation plans

If the existing attacher is transferring their facilities to our new poles, the existing attacher's construction schedule may begin only after Duke Energy's relocation construction is completed. Duke Energy has no control over the start date or finish date for attachers vacating our existing poles.

B. A statement whether the facility relocation is or is not dependent on work to be done by the HAMILTON COUNTY or the HAMILTON COUNTY'S contractor with a description of that work. [IAC 13-3- 3(c)(2)(A)(ii)]

Work item A

HAMILTON COUNTY will give written notice to Duke Energy that all "possessory rights" have been acquired for the entire length of the approved work plan area before relocation construction begins.

Work item B

HAMILTON COUNTY will work closely with Duke Energy to safely clear all trees, shrubs and structures, at the HAMILTON COUNTY's cost, for the entire length of the approved relocation plan area, including areas sufficiently beyond the construction limits to accommodate the approved relocation work plan before relocation construction begins.

Work item C

HAMILTON COUNTY will notify Duke Energy after staking:

A. HAMILTON COUNTY ROW limits, along with any offset, every 100ft with station identification before relocation construction begins.

Work item D

HAMILTON COUNTY will provide signed copies of all reimbursement agreements before relocation construction begins. NOT APPLICABLE

Work item E

HAMILTON COUNTY will provide Duke Energy a "Signed" work plan on or before as the ready for contracts date.

Work item F

HAMILTON COUNTY will provide Duke Energy a "Letter to Proceed" on or before the ready for contracts date but no event later than the required pre-construction lead time prescribed in Sections 5 F & G.

In the event that Duke Energy Indiana decides to hold, protect or guard its installed facilities before, after or during relocation construction, for the <u>safe</u> installation of another facility or utility, Duke Energy Indiana will notify the HAMILTON COUNTY immediately. Because time is of the essence, the HAMILTON COUNTY and Duke Energy Indiana agree to work together to minimize costs and delays for all parties involved, and Duke Energy Indiana agrees to not proceed until an agreement is reached with the HAMILTON COUNTY regarding reimbursement of Duke Energy Indiana's costs for holding protecting or guarding its facilities.

C. How many calendar days after the events identified in Sec 6 A and B are completed can the utility begin construction:
Absent an agreement expediting the work between the HAMILTON COUNTY and Duke Energy Indiana, the earliest date when Duke Energy Indiana could begin construction.

1.) If the HAMILTON COUNTY ROW staking and clearing is contained in the HAMILTON COUNTY's construction contract, Duke Energy Indiana will begin construction within 60 days after Duke Energy Indiana has received from HAMILTON COUNTY both a "Notice to Proceed" (confirming the staking and clearing has been completed) and a fully executed Work Plan.

If the HAMILTON COUNTY ROW staking and clearing is let as a separate contract, Duke Energy Indiana will begin construction within 60 days after Duke Energy Indiana has received from HAMILTON COUNTY both a "Notice to Proceed" (confirming the staking and clearing has been completed) and a fully executed Work Plan.

If at any time within 120 days from the most current published letting date, the HAMILTON COUNTY changes the letting date by more than fourteen (14) days, Duke Energy Indiana reserves the right upon written notice sent by mail to the HAMILTON COUNTY, to provide to the HAMILTON COUNTY a revised work plan within 60 days from the date Duke Energy Indiana is notified of the change.

D. The number of calendar days to complete the relocation work: **60 Days**

Section 7: A drawing of sufficient detail with station, offset, elevations, and scale to show the proposed location of the facility relocation, which takes precedence over the narrative description of the work. [IAC 13-3-3(c) (6)].

See Exhibit A.

Section 8: For each work plan the utility shall include a cost estimate for the facility relocation. For reimbursable work the estimate will identify betterment and salvage, which is not reimbursable. [IAC 13-3-3(d)]

Not Applicable.

Section 9: For work the utility is entitled to be compensated by the Department, the work plan shall include documentation of property interests and compensable land rights. [IAC 13-3-3(d)]

Not Applicable.

Section 10: The implementation of this approved work plan is dependent upon the issuance of: (a notice to proceed will be provided when items in Section 6 are accomplished)

Items Completed	Yes	Not Applicable
An executed reimbursement agreement with HAMILTON COUNTY:	☐	☒
A relocation permit from HAMILTON COUNTY:	☒	☐

(Note: Double-click on box in Yes or NA to mark it with an "X")

Dan Benson
Submitter Signature

12/9/2019
Date

Dan Benson
Submitter Name Printed

HAMILTON COUNTY use only below this point ---------- HAMILTON COUNTY use only below this point

The following sections are to be used by INDOT personnel to review the utility relocation work plan.

Section 11: The Department shall review the work plan to ensure that it: [IAC 13-3-3(e)]

Description	Yes	No	Initials
(1.a) is compatible with department permit requirements	X		NDB
(1.b) is compatible with the project plans	X		NDB
(1.c) is compatible with the construction schedule	X		NDB
(1.d) is compatible with other utility relocation work plans	X		NDB
(2.a) has reasonable relocation scheme	X		NDB
(2.b) has a reasonable cost for compensable work		X	NDB

(**Note**: Double-click on box under Yes or No to mark it with an "X")

Comments on any sections (1.a – 2.b) that were marked No: 2.b. Relocation is not reimburable

Reviewer Signature

12/09/2019

Date

Nick Bergman

Reviewer Name Printed

Section 12: Approved Work Plan. [IAC 13-3-3(f)]

I have reviewed the work plan and found it acceptable.

Faraz J Khan

Digitally signed by Faraz J Khan
DN: cn=Faraz J Khan, o=Hamilton County Highway Department, ou, email=faraz.khan@hamiltoncounty.in.gov, c=US
Date: 2020.04.02 10:27:36 -04'00'

Project Manager Signature

April 2, 2020

Date

Faraz Khan

Project Manager Name Printed

SAFETYFirst ▷ PERSONAL ACCOUNTABILITY ▷ ACTIVE CARING ▷ HAZARD RECOGNITION	Upstream Protection	CIRCLE FOR SAFETY	Safety Reminders / Adverse Conditions			Other Project Notes
	Type(recloser, breaker, sectionalizer), ID, Location		Remember "Your Circle of Safety"		REMEMBER: Work zone area conditions may have changed for this job. Everyone is responsible for verifying the safety information is correct prior to any work being performed each day.	

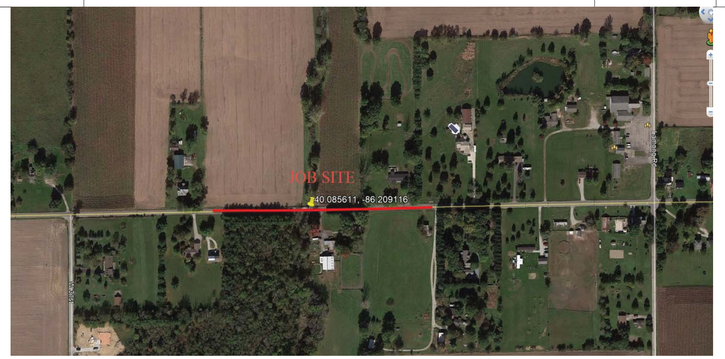

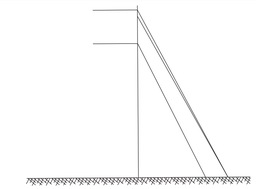

Typical Guying

3/8" Guy Wire
14" Anchors

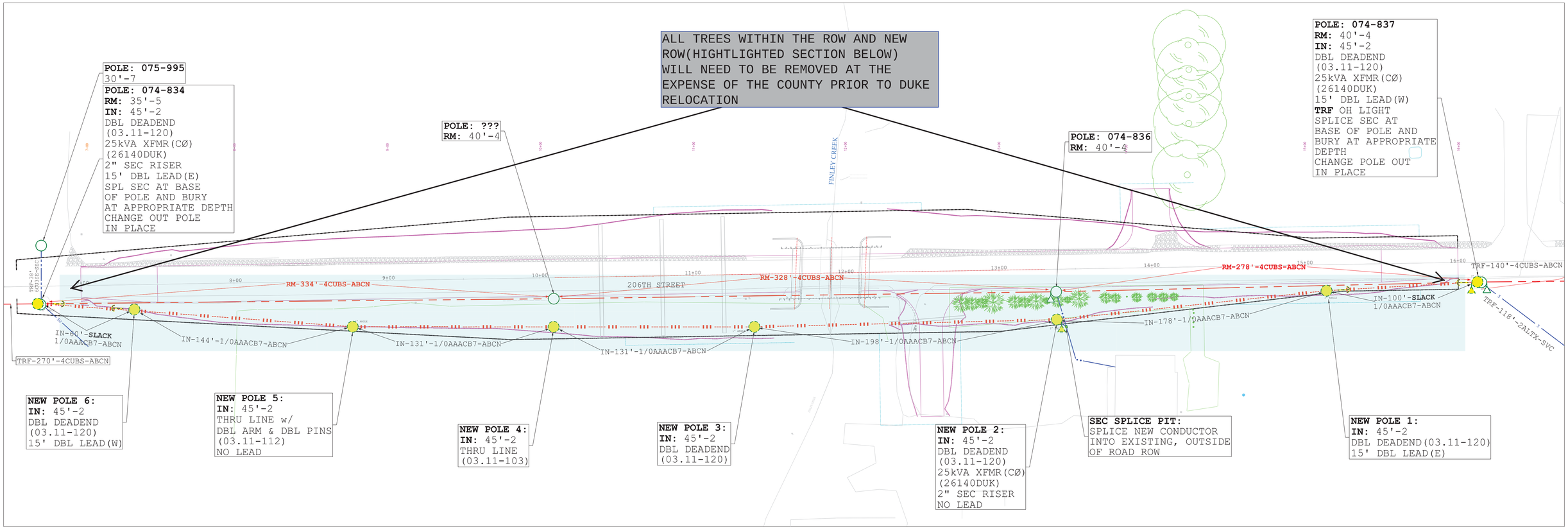

N

General Information	
INDOT DES #	NA
206th Street	
Sheridan	
Hamilton County, IN	
Washington Township	

Work Order Information					
Distribution					
Emax #	Project Code				OU / Center
34751968	NA				V542/S429
Transmission					
Emax #	Install	Remove	OH Maint.	UG Maint.	OU / Center

Circuit Information
Distribution
Sheridan
1201 Circuit
Transmission

Duke Energy Legend			
	Existing Duke Pole		Existing Downguy
	Proposed Duke Pole		Proposed Downguy
REM	Remove Duke Pole		Transmission Line
	Existing Foreign Pole		Distribution Line
	Proposed Foreign Pole		Secondary Line
REM	Remove Foreign Pole		Overhead Light

ILLNESS ZERO INJURY

811 Know what's below. Call before you dig.

DUKE ENERGY.

INDEX	Exhibit "A"		
DETAIL	206th Street Over Finley Creek	Work Plan Drawing	
DATE 12.02.2019	LOCATION 40.085611, -86.209116		
DRAWN Dan Benson	PHONE 317-315-4681		
ELECTRIC TRANSMISSION & DISTRIBUTION LINE ENGINEERING	APPROVAL SIGNATURE	DWG NO SHEET 1 OF 1	

SAFETYFirst ▷ PERSONAL ACCOUNTABILITY ▷ ACTIVE CARING ▷ HAZARD RECOGNITION	Upstream Protection	CIRCLE FOR SAFETY	Safety Reminders / Adverse Conditions			Other Project Notes
	Type(recloser, breaker, sectionalizer), ID, Location		Remember "Your Circle of Safety"		REMEMBER: Work zone area conditions may have changed for this job. Everyone is responsible for verifying the safety information is correct prior to any work being performed each day.	

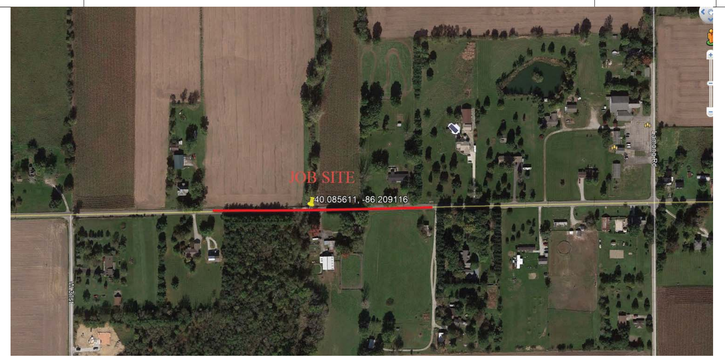

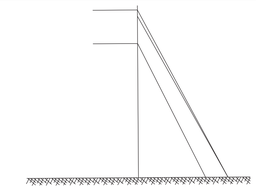

Typical Guying

3/8" Guy Wire
14" Anchors

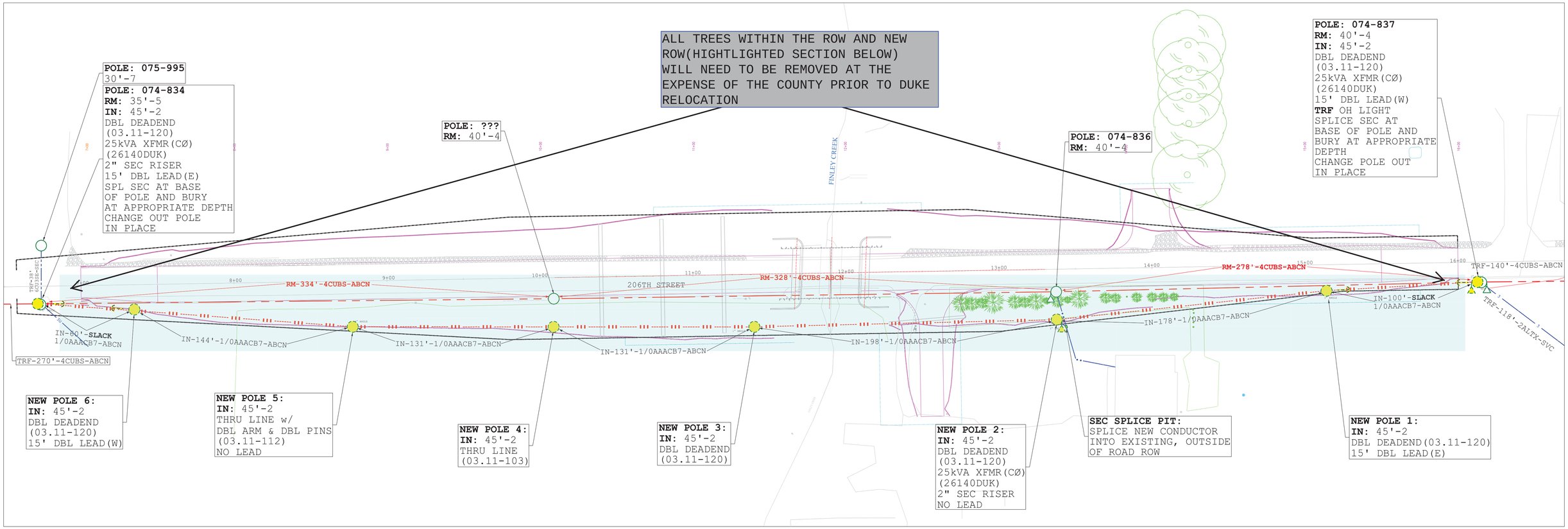

N

General Information	
INDOT DES #	NA
206th Street	
Sheridan	
Hamilton County, IN	
Washington Township	

Work Order Information					
Distribution					
Emax #	Project Code				OU / Center
34751968	NA				V542/S429
Transmission					
Emax #	Install	Remove	OH Maint.	UG Maint.	OU / Center

Circuit Information
Distribution
Sheridan
1201 Circuit
Transmission

Duke Energy Legend			
	Existing Duke Pole		Existing Downguy
	Proposed Duke Pole		Proposed Downguy
REM	Remove Duke Pole		Transmission Line
	Existing Foreign Pole		Distribution Line
	Proposed Foreign Pole		Secondary Line
REM	Remove Foreign Pole		Overhead Light

ILLNESS ZERO INJURY

811 Know what's below. Call before you dig.

DUKE ENERGY.

INDEX	Exhibit "A"		
DETAIL	206th Street Over Finley Creek	Work Plan Drawing	
DATE 12.02.2019	LOCATION 40.085611, -86.209116		
DRAWN Dan Benson	PHONE 317-315-4681		
ELECTRIC TRANSMISSION & DISTRIBUTION LINE ENGINEERING	APPROVAL SIGNATURE	DWG NO SHEET 1 OF 1	

Date: 12/04/19

Subject:

Utility Relocation Work Plan for:	AT&T-DISTRIBUTION
Facility Type:	COMMUNICATION

Section 1: General Information

A. INDOT/LPA Project Information

1.	DES NO.:	N/A
2.	Route Number:	206th Street
3.	Location:	500' east of Centennial Rd to 1,100' west of Lamong Rd.
4.	Work Type:	Bridge Replacement
5.	Letting Date:	12/12/2019 (To be revised)
6.	Date Work Plan Needed	01/06/2020
7.	Target Date for Utility to be out of conflict with INDOT Project	TBD
	Intermediate Phase	N/A
	Intermediate Phase	N/A

B. Utility Designated Contact – Information

1.	Designated Contact Name:	DAVID W. SMITH
2.	Office telephone:	765-454-5021
3.	Mobile telephone:	765-760-4786
4.	Email address:	DS8383@ATT.COM
5.	Agency name	AT&T
6.	Address:	116 E. TAYLOR ST.
7.	City, State, Zip Code:	KOKOMO, IN 46901
8.	Construction Emergency Contact:	
	Name:	SAME AS ABOVE
	Number:	SAME AS ABOVE

C. By signing here, the Utility has determined to the best of their ability that they do not have facilities within the project area:

Signature of Utility Representative Print Name Date

Note: A signature by the utility representative at item "(C)" fulfills the requirement to complete the rest of this

form and affirms their contact information above is correct

D. INDOT/LPA Utility Coordinator Contact Information

1.	Utility Coordinator Name:	Nick Bergman
2.	Office Telephone:	317-202-1285
3.	Mobile Telephone:	
4.	Email Address:	nbergman@infrastructure-eng.com
5.	Agency Name:	Infrastructure Engineering, Inc.
6.	Address:	201 S. Capitol Avenue, Suite 490
7.	City, State, Zip Code	Indianapolis, IN 46225

Section 2: A narrative description of existing facilities within the project limits and any facility relocation that will be required. [IAC 13-3-3(c)]

A. Describe what types of existing active and inactive facilities are present.
BURIED COPPER CABLE.

B. Describe the location of existing active and inactive facilities.
SOUTH R/W OF 206TH ST

C. Describe what will be done with existing active and inactive facilities.
BURIED COPPER CABLE AND PEDESTAL WEST OF BRIDGE WILL REMAIN IN PLACE.
BURIED COPPER CABLE AND PEDESTAL EAST OF BRIDGE WILL BE RETIRED IN PLACE AND THE PEDESTAL REMOVED.

D. Describe the details of the proposed new facilities.
N/A

E. Describe the proposed location of the new facilities.
N/A

F. By signing here, the Utility has determined to the best of their ability that they have facilities within the project area and the facilities are not in conflict with the project based upon the plans received on <**Enter Date Received Plans**>

Signature of Utility Representative Print Name Date

Note: A signature by the utility representative at item "(F)" fulfills the requirement to complete the rest of this form and affirms their contact information above is correct.

Section 3: A statement whether the facility relocation is or is not dependent on the acquisition of additional property interests with a description of that work. [IAC 13-3-3(c) (2) (B)]
NO

Section 4: A statement whether the utility is or is not willing to allow the INDOT contractor to do the required work as part of the highway contract. [IAC 13-3-3(c) (3)]
NOT WILLING

Section 5: From the date the work plan is approved by both parties; please provide the Utility's pre-construction scheduling information. [IAC 13-3-3(c) (4), IAC 13-3-3(c) (5)]

A.	The expected lead time in calendar days to obtain required permits:	14
B.	The expected lead time in calendar days to obtain materials:	7
C.	The expected lead time in calendar days to schedule work crews:	14 days for scheduling after bid awarded. Not included in G. starts after NTP-WILL BE INCLUDED IN CONSTRUCTION TIME.
D.	If the contractor is being selected by competitive bid what is the date of selection?	14 day bid process- not included in G. starts after NTP-WILL BE INCLUDED IN CONSTRUCTION TIME.
E.	The expected lead time in calendar days to obtain new property interests:	n/a
F.	The earliest date when the utility could begin to implement the pre-construction activities of the work plan:	7 days after receiving an approved work plan
G.	The total number of calendar days for pre-construction activities: (accounting for concurrent activities)	30 days for preconstruction activities and engineering design work

Section 6: The Utility Construction Scheduling Information. [IAC 13-3-3(c) (4), IAC 13-3-3(c) (5)]

A. A statement whether the facility relocation is or is not dependent on work to be done by another utility with a description of that work. [IAC 13-3-3(c)(2)(A)(i)]

1. Utility A, with a description of the required work.
   N/A

2. Utility B, with a description of the required work.
   N/A

3. Utility C, with a description of the required work.
   N/A

B. A statement whether the facility relocation is or is not dependent on work to be done by the department or the department's contractor with a description of that work. [IAC 13-3- 3(c)(2)(A)(ii)]

1. Work item A
   N/A

2. Work item B
   N/A

3. Work item C
   N/A

C. How many calendar days after the events identified in Sec 6 A and B are completed can the utility begin construction: 15

D. The number of calendar days to complete the relocation work:30 TOTAL DAYS TO INCLUDE 6C

Section 7: A drawing of sufficient detail with station, offset, elevations, and scale to show the proposed location of the facility relocation, which takes precedence over the narrative description of the work, needs to be on INDOT Construction drawings. [IAC 13-3-3(c) (6)]. Plans must be attached to this Work Plan Document.
SEE ATTACHED

Section 8: For each work plan the utility shall include a cost estimate for the facility relocation. For reimbursable work the estimate will identify betterment and salvage which is not reimbursable. [IAC 13-3-3(d)]

Section 9: For work the utility is entitled to be compensated by the Department, the work plan shall include documentation of property interests and compensable land rights. [IAC 13-3-3(d)]

Section 10: The implementation of this approved work plan is dependent upon the issuance of: (a notice to proceed will be provided when items in Section 6 are accomplished)

Items Completed	Yes	Not Applicable
An executed reimbursement agreement with INDOT/LPA:	☐	☒
A relocation permit from INDOT/LPA:	☒	☐

(Note: Double-click on box in Yes or NA to mark it with an "X")

David W. Smith Digitally signed by David W. Smith
Date: 2019.12.04 17:58:18 -05'00'

12/04/19

Signature of Utility Representative

Date

David W. Smith

Utility Representative Name Printed

INDOT/LPA use only below this point ---------- INDOT/LPA use only below this point

INDOT/LPA use only below this point ---------- INDOT/LPA use only below this point

The following sections are to be used by INDOT personnel to review the utility relocation work plan.

Section 11: The Department shall review the work plan to ensure that it: [IAC 13-3-3(e)]

Description	Yes	N/A	Utility Coordinator Initials
(1.a) is compatible with department permit requirements	☒	☐	NDB
(1.b) is compatible with the project plans	☒	☐	NDB
(1.c) is compatible with the construction schedule	☒	☐	NDB
(1.d) is compatible with other utility relocation work plans	☒	☐	NDB
(2.a) has reasonable relocation scheme	☒	☐	NDB
(2.b) has a reasonable cost for compensable work	☐	☒	NDB

(**Note**: Double-click on box under Yes or N/A to mark it with an "X")

2.b. Relocation is not reimburable

12/09/2019

Utility Coordinator Signature

Date

Nick Bergman

Utility Coordinator Name Printed

Section 12: Approved Work Plan. [IAC 13-3-3(f)]

I have reviewed the work plan and have been made aware of the schedule and budget.

Faraz J Khan

Digitally signed by Faraz J Khan
DN: cn=Faraz J Khan, o=Hamilton County Highway Department, ou, email=faraz.khan@hamiltoncounty.in.gov, c=US
Date: 2020.04.02 10:35:31 -04'00'

April 2, 2020

Project Manager Signature (LPA Project – ERC Signature)

Date

Faraz Khan

Project Manager Name Printed (LPA Project – ERC Name Printed)

HAMILTON COUNTY, INDIANA

STRUCTURE	TYPE	SPAN AND SKEW	OVER	STATION
HAMILTON 311	COMPOSITE PRESTRESSED CONCRETE BOX BEAM BRIDGE	1 SPAN AT 43'-0" SKEW: 3°-00" RT.	FINLEY CREEK	11+90.0 Line "A"

REPLACEMENT PLAN FOR SMALL STRUCTURE NO. 21037 (BRIDGE NO. 311) 206th STREET OVER FINLEY CREEK WASHINGTON TOWNSHIP PROJECT NO.

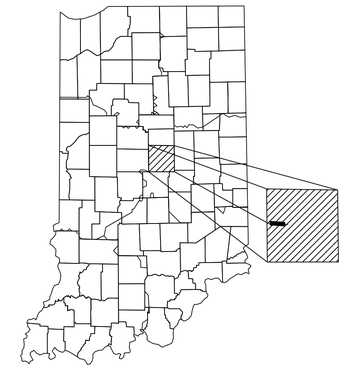

PROJECT LOCATION SHOWN BY

LATITUDE: 40° 05' 08" N LONGITUDE: 86° 12' 33" W

TRAFFIC DATA

A.A.D.T. (Projected)	(2019)	573 V.P.D.
A.A.D.T. (Projected)	(2039)	1,044 V.P.D.

DESIGN DATA

DESIGN SPEED	45 M.P.H.
FUNCTIONAL CLASSIFICATION	Primary Arterial
ACCESS CONTROL	None
REGULATED DRAIN	Yes - Open Stream

REPLACEMENT OF HAMILTON COUNTY SMALL STRUCTURE NO. 21037 (BRIDGE NO. 311)
206TH STREET OVER FINLEY CREEK, 1,600 FEET WEST OF LAMONG ROAD IN SECTION
17 & 20, T 19N, R3E, WASHINGTON TOWNSHIP , HAMILTON COUNTY, INDIANA.

INDEX

SHEET NO.	SUBJECT
1	TITLE AND INDEX
2	TYPICAL SECTIONS
5	DETOUR ROUTE
6	PLAN AND PROFILE
7	EROSION CONTROL PLAN
8	SOIL BORINGS
9	GENERAL PLAN
10-11	ABUTMENT DETAILS
12	FRAMING PLAN
13	BEAM DETAILS
14	DECK DETAILS
15	RAILING DETAILS
16	SUMMARY TABLES
17-22	CROSS SECTIONS

BRIDGE LENGTH	45.5 FT
ROADWAY LENGTH	754.5 FT
TOTAL LENGTH	800.0 FT
MAX. GRADE	4.28%

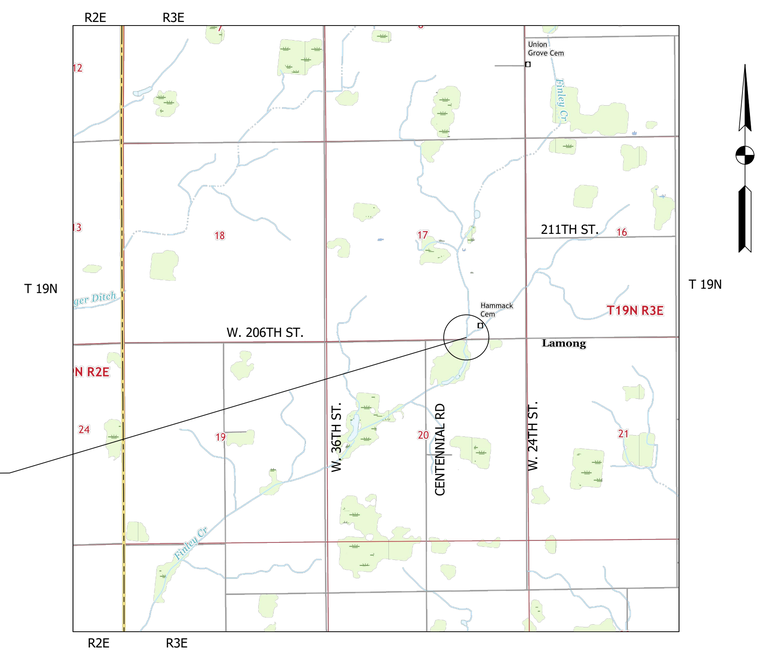

PROJECT LOCATION
Begin Project Sta. 7+50 "A"
End Project Sta. 15+50 "A"

LOCATION MAP

SCALE: 1" = 2,000'

0' 2000' 4000'

Indiana 811
Know what's below. Call before you dig.

1-800-382-5544

CALL BEFORE YOU DIG

CAUTION !!

THE LOCATIONS OF ALL EXISTING UNDERGROUND UTILITIES SHOWN ON THIS PLAN ARE BASED UPON ABOVE GROUND EVIDENCE (including, but limited to, manholes, inlets, valves, and marks made upon the ground by others) AND ARE SPECULATIVE IN NATURE. THERE MAY ALSO BE OTHER EXISTING UNDERGROUND UTILITIES FOR WHICH THERE IS NO ABOVE GROUND EVIDENCE OR FOR WHICH NO ABOVE GROUND EVIDENCE WAS OBSERVED. THE EXACT LOCATION OF SAID EXISTING UNDERGROUND UTILITIES SHALL BE VERIFIED BY THE CONTRACTOR PRIOR TO ANY AND ALL CONSTRUCTION.

PLANS APPROVED BY:
HAMILTON COUNTY BOARD OF COMMISSIONERS

_____ DATE _____
STEVE C. DILLINGER, PRESIDENT

_____ DATE _____
MARK HEIRBRANDT, MEMBER

_____ DATE _____
CHRISTINE ALTMAN, MEMBER

ATTEST

_____ DATE _____
ROBIN MILLS, COUNTY AUDITOR

RECOMMENDED FOR APPROVAL

_____ DATE _____
JIM NEAL, PE, COUNTY HIGHWAY ENGINEER

FINAL PLANS SUBMITTAL
06/28/2019

INFRASTRUCTURE ENGINEERING | INCORPORATED
201 South Capitol Avenue | Suite 490 | Indianapolis, IN 46225
P 317.243.9800 | F 317.243.9100 | www.infrastructure-eng.com

_____ DATE _____
NICHOLAS D. BERGMAN

INDIANA DEPARTMENT OF TRANSPORTATION
STANDARD SPECIFICATIONS DATED 2020
TO BE USED WITH THESE PLANS.

Last Update: Jun 28, 2019 5:11pm
Drawing name: Q:\P-18\3722-00 - 206th Street Finley Creek (Hamilton Co)\DWG\Sheets\3722 - Title.dwg

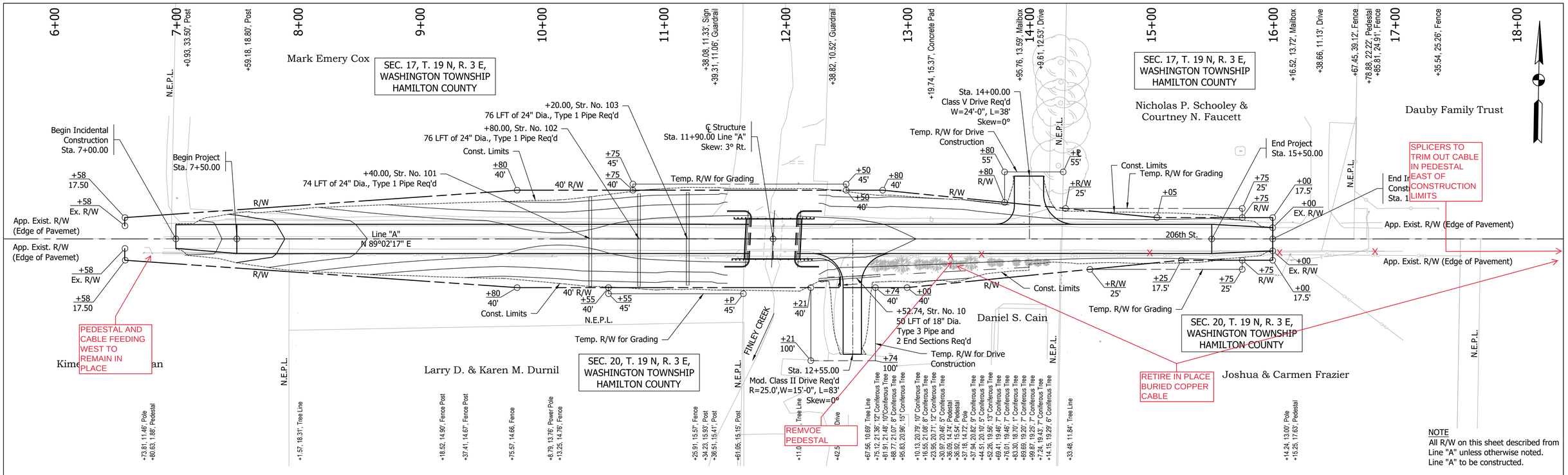

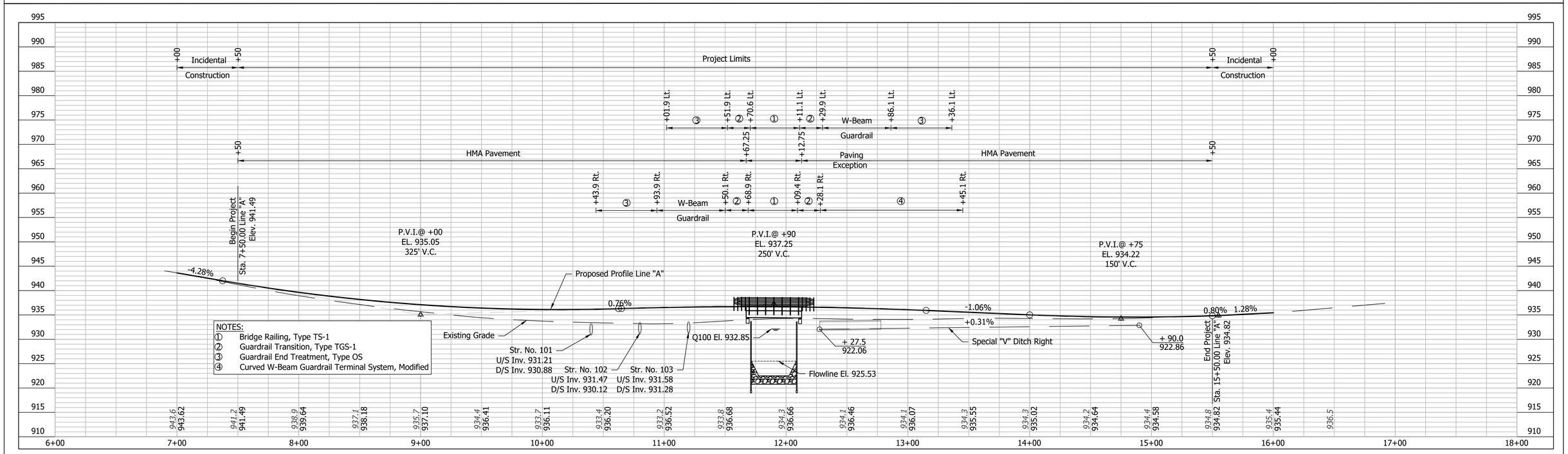

N: 1762569.51
E: 177873.17
Iron Pin
Southeast Corner, Southeast 1/4, Section 17, Township 19 North, Range 3 East Harrison Monument Found
Power Pole
S.E. CORNER S.E. 1/4 , SEC. 17, T.19N, R.3E

N: 1762324.83
E: 175219.53
Southwest Corner, Southeast 1/4, Section 17, Township 19 North, Range 3 East Harrison Monument Found
Mag Nail
Power Pole
S.W. CORNER S.E. 1/4 , SEC. 17, T.19N, R.3E

BENCHMARK INFORMATION:
CP#10001 - ⅝" Rebar with cap was set in the grass on the north side of 206th Street.
(N: 1762352.1690, E: 175834.2180, Elev.: 942.22)
CP#10002 - ⅝" Rebar with cap was set in the grass on the south side of 206th Street.
(N: 1762327.8050, E: 176829.6980, Elev.: 932.11)
CP#10003 - ⅝" Rebar with cap was set in the grass on the north side of 206th Street.
(N: 1762371.3540, E: 176829.6980, Elev.: 936.38)
TBM#2044 - Mag nail in north face of power pole. (N: 1762337.4860, E: 176733.8430, Elev.: 936.45)

NOT FOR CONSTRUCTION

RECOMMENDED FOR APPROVAL
DESIGN ENGINEER DATE

DESIGNED: EAS 06/2019 DRAWN: EAS 06/2019
CHECKED: NDB 06/2019 CHECKED: DTQ 06/2019

HAMILTON COUNTY, INDIANA

PLAN AND PROFILE
LINE "A"

HORIZONTAL SCALE	BRIDGE FILE
1" = 40'	HAMILTON 311
VERTICAL SCALE	DESIGNATION
1" = 10'	
SURVEY BOOK	SHEET
	6 of 22
CONTRACT	PROJECT

INFRASTRUCTURE ENGINEERING | INCORPORATED
201 South Capitol Avenue | Suite 490 | Indianapolis, IN 46225
P 317.243.5800 | F 317.243.9100 | www.infrastructure-eng.com

Last Update: Oct 16, 2019 - 12:40pm
Drawing name: Q:\P-18\3722-00 - 206th Street Finley Creek (Hamilton Co)\DWG\Sheets\3722 - Plan and Profile.dwg

APPENDIX F

SMALL STRUCTURE # 21037 (BRIDGE # 311)
206TH STREET / FINLEY CREEK

PAGE INTENTIONALLY LEFT BLANK

OFFICE OF THE HAMILTON COUNTY SURVEYOR

DRAIN OUTLET DETAIL #1

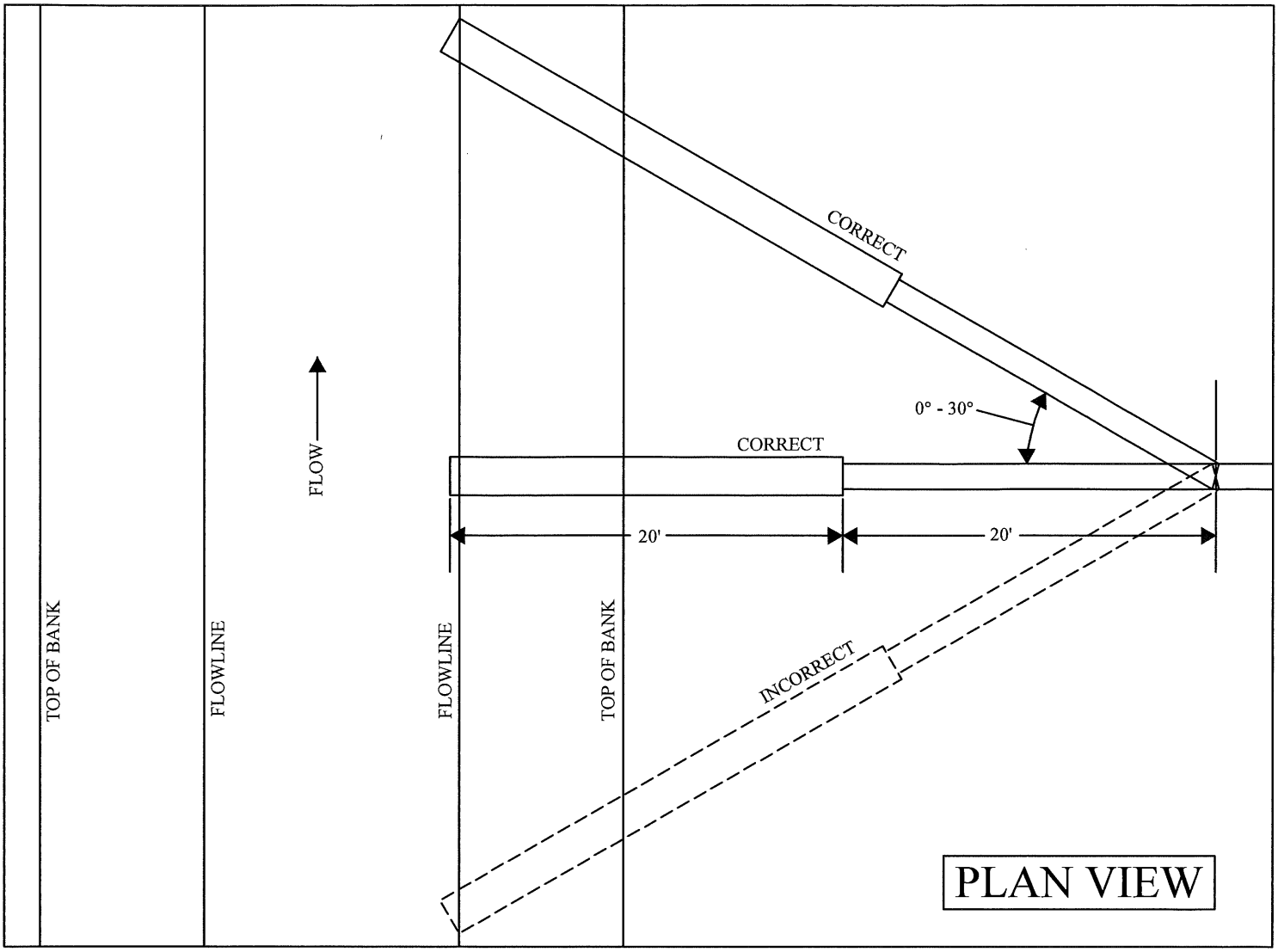

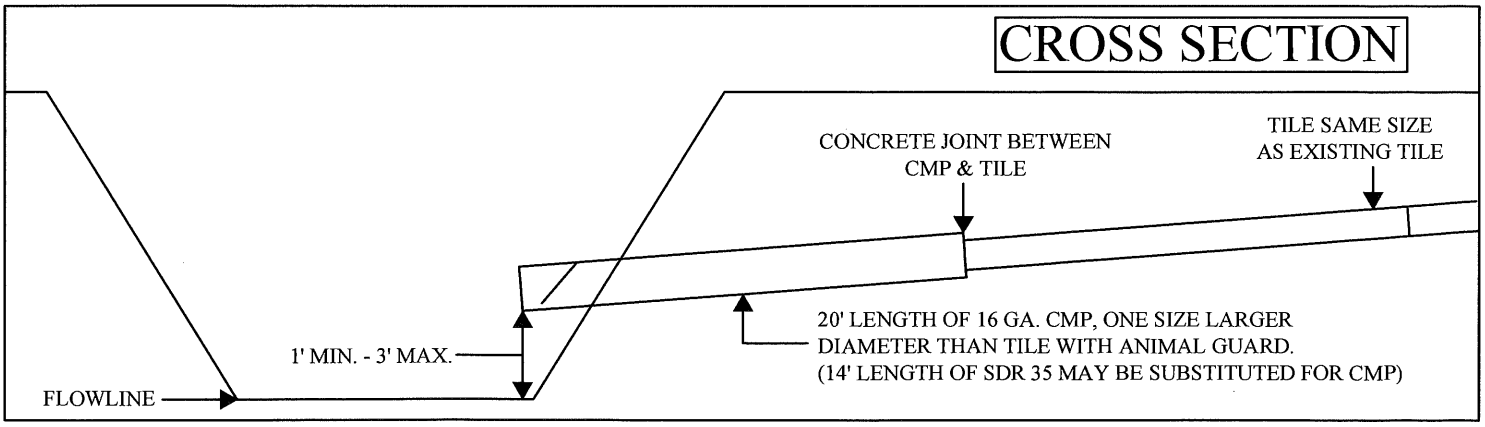

(DRAWING NOT TO SCALE)

HAMILTON COUNTY SURVEYOR'S OFFICE

REVISED: 18 APR 2017

APPROVED: Kenton C. Ward
KENTON C. WARD, HAMILTON COUNTY SURVEYOR

1MAY17
DATE

STANDARD PLAN

O - 1

OFFICE OF THE HAMILTON COUNTY SURVEYOR

DRAIN OUTLET DETAIL #2

FLAP TYPE ANIMAL GUARD DETAIL

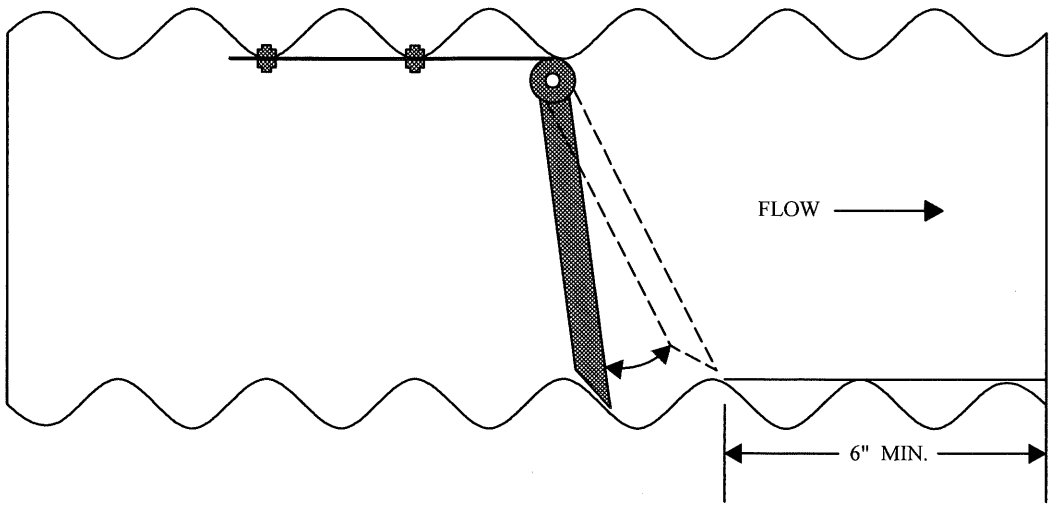

SECTION ON ℄ SHOWING DETAIL OF JOINT FOR DRAIN TILE AND CMP PIPE

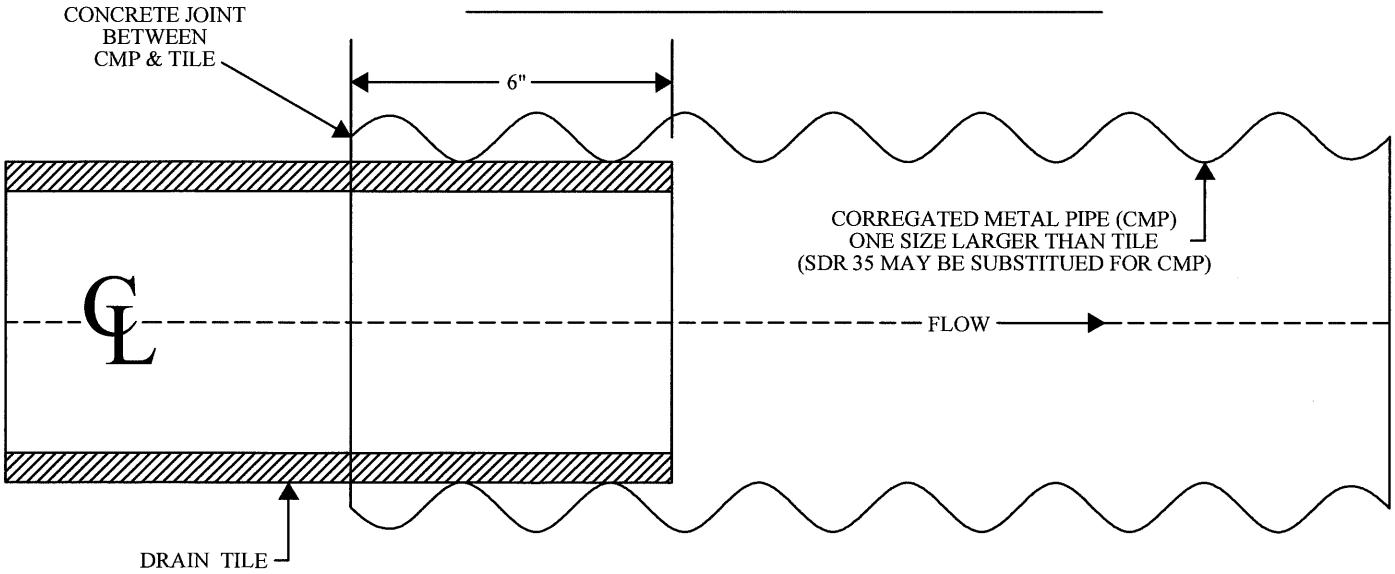

(DRAWING NOT TO SCALE)

HAMILTON COUNTY SURVEYOR'S OFFICE

REVISED: 12 APR 2017

APPROVED: Kenton C. Ward
KENTON C. WARD, HAMILTON COUNTY SURVEYOR

1 MAY 17
DATE

STANDARD PLAN
O - 2

OFFICE OF THE HAMILTON COUNTY SURVEYOR

TILE CONNECTION

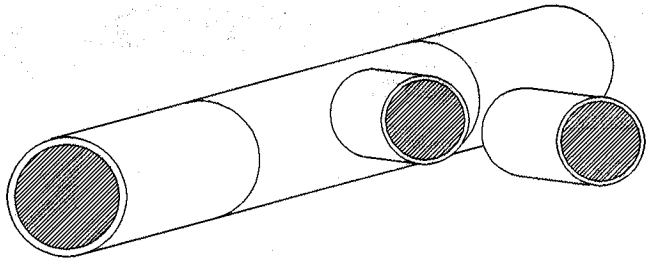

"TEE CONECTION"

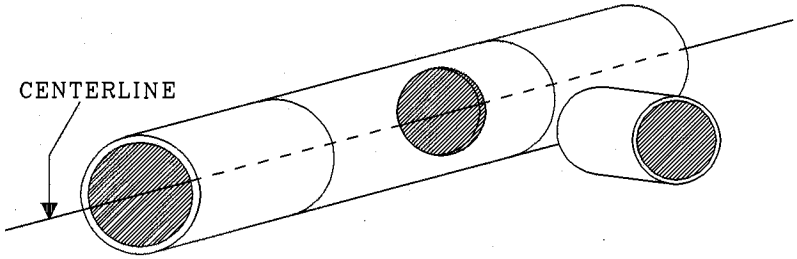

"HOLE IN TILE"

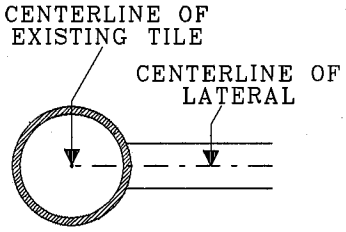

CROSS SECTION

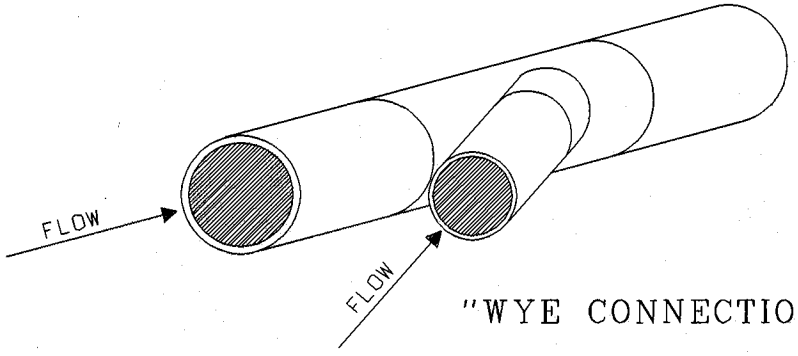

"WYE CONNECTION"

(DRAWING NOT TO SCALE)

HAMILTON COUNTY SURVEYOR'S OFFICE

REVISED: 1 JAN 2000

APPROVED: _____ 4 JAN 00
KENTON C. WARD, HAMILTON COUNTY SURVEYOR — DATE

STANDARD PLAN
0-3

INLET PROTECTION SOIL APPLICATIONS

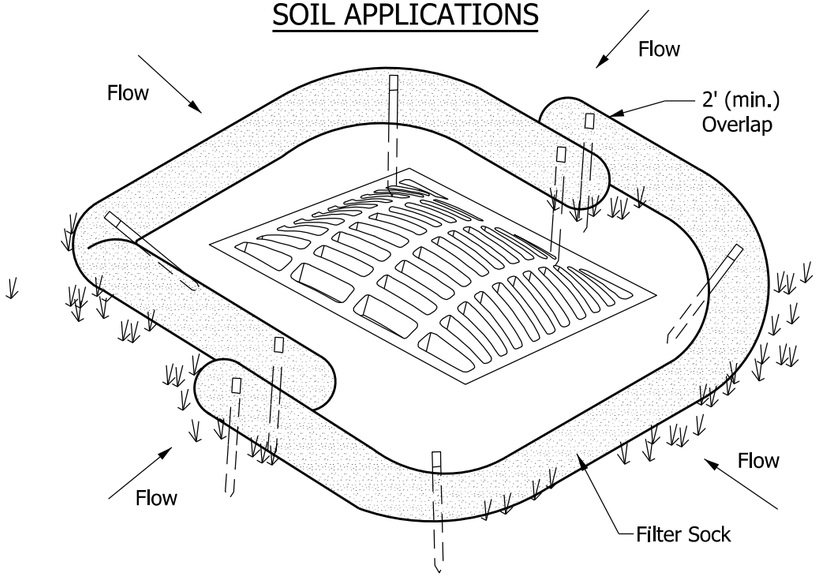

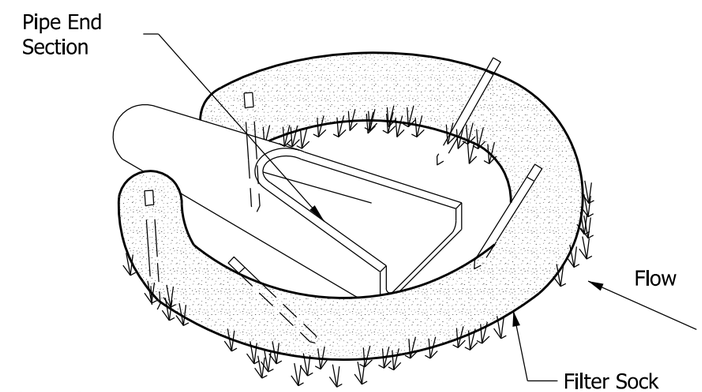

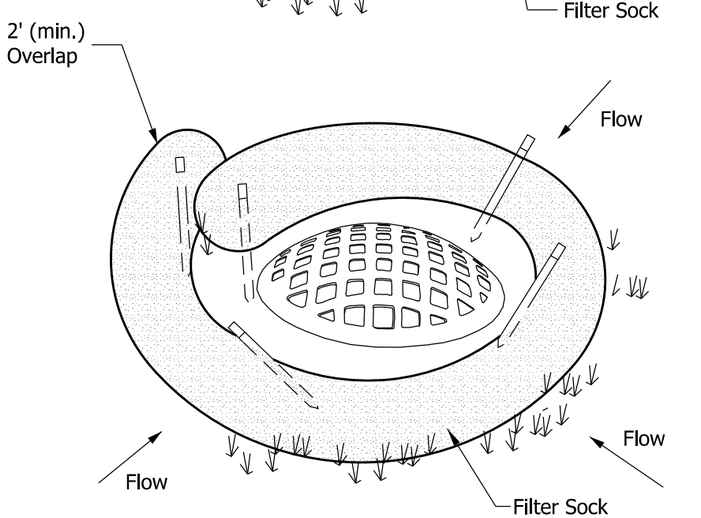

INLET PROTECTION PAVEMENT APPLICATIONS

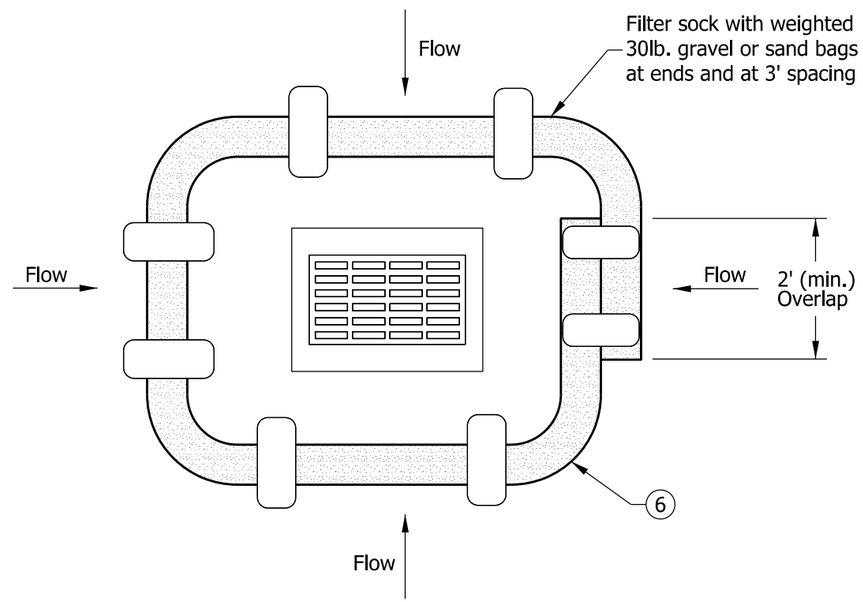

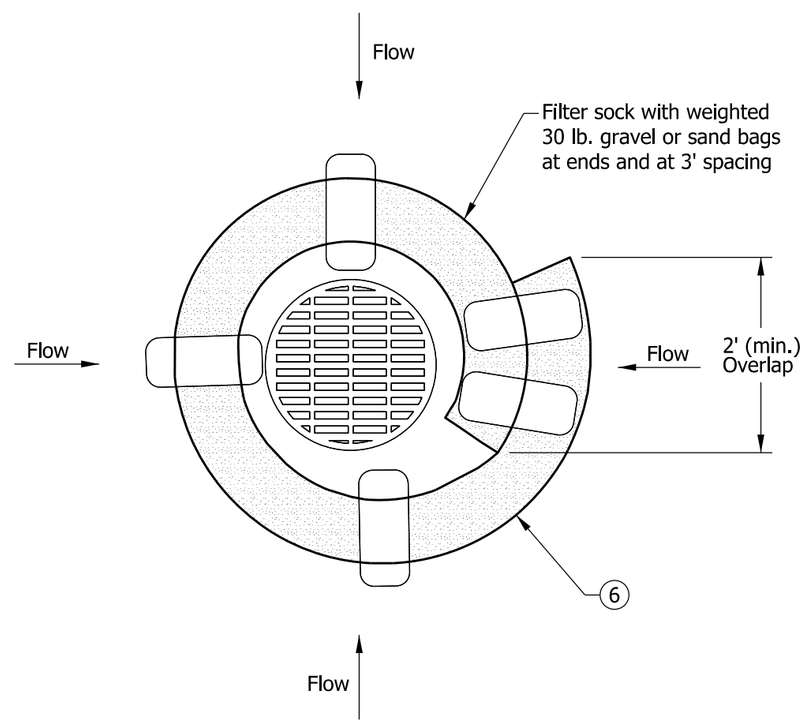

NOTES:

1. Fiber roll may be substituted for filter sock.
2. Filter sock shall be secured to prevent movement and undercutting as shown or in accordance with the manufacturer's instructions. See Standard Drawing E 205-TECD-10 for securing methods.
3. Inlet protection shall be inspected, at a minimum once every seven days and after each storm event. Sediment shall be removed when 1/3 of the filter sock depth has been filled or as directed.
4. Sediment and gravel deposited on roadways shall be removed once identified after each storm event.
5. Inlet protection shall be removed after the surrounding area becomes stable.

6. Inlet protection shall be used within a lane or shoulder only when closed to traffic. Inlet protection shall not cause water to encroach upon a lane open to traffic.

INDIANA DEPARTMENT OF TRANSPORTATION

TEMPORARY INLET
PROTECTION, FILTER SOCK

SEPTEMBER 2019

STANDARD DRAWING NO. E 205-TECD-02

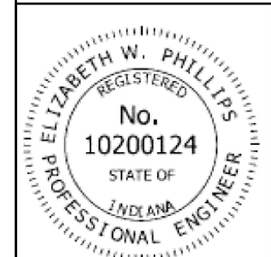

5/2/2019
DESIGN STANDARDS ENGINEER DATE

5/31/2019
CHIEF ENGINEER DATE

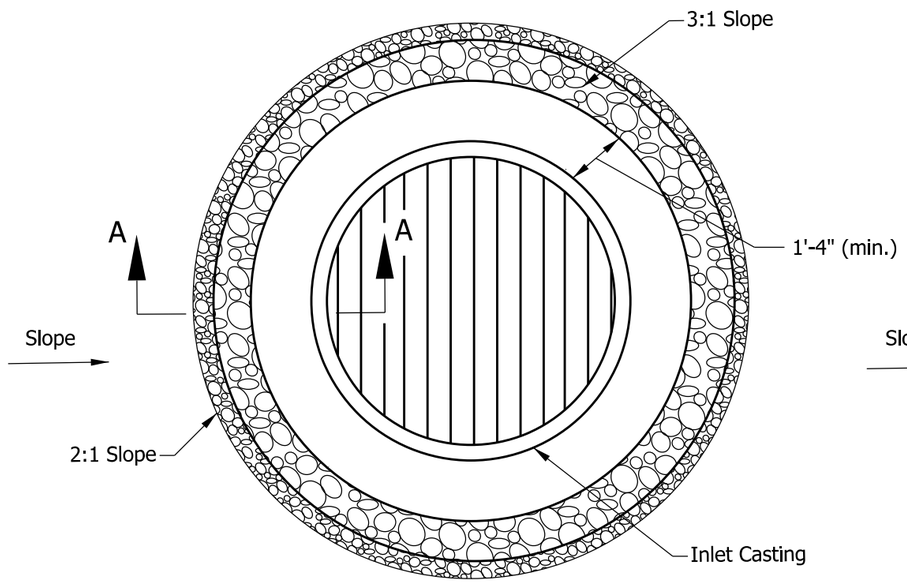

PLAN VIEW

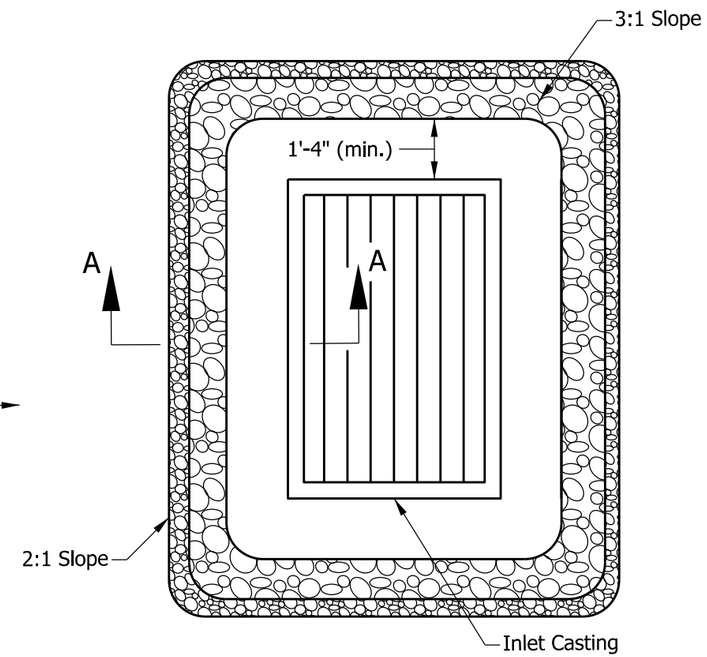

PLAN VIEW

NOTES:

1. H = h + 0.25, ft
2. Weight of coarse aggregate #2, Tons:
   $(6.28/27)(0.67^2 + 2.5H)(1 + 3H + \frac{1}{2}\text{ inlet width})(0.6)$
3. Weight of coarse aggregate #8, Tons:
   $(6.28/27)(H)(1 + 4H + \frac{1}{2}\text{ inlet width})(0.6)$

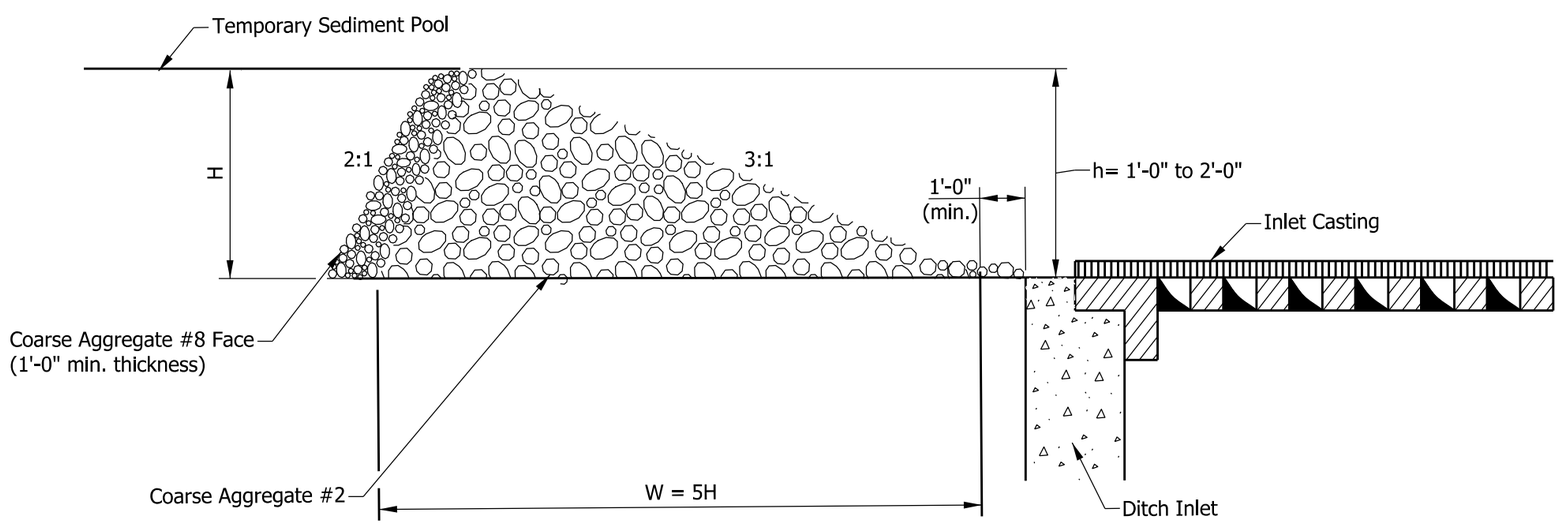

SECTION A-A

INDIANA DEPARTMENT OF TRANSPORTATION

TEMPORARY INLET
PROTECTION, GRAVEL RING

SEPTEMBER 2019

STANDARD DRAWING NO. E 205-TECD-03

5/2/2019
DESIGN STANDARDS ENGINEER DATE

5/31/2019
CHIEF ENGINEER DATE

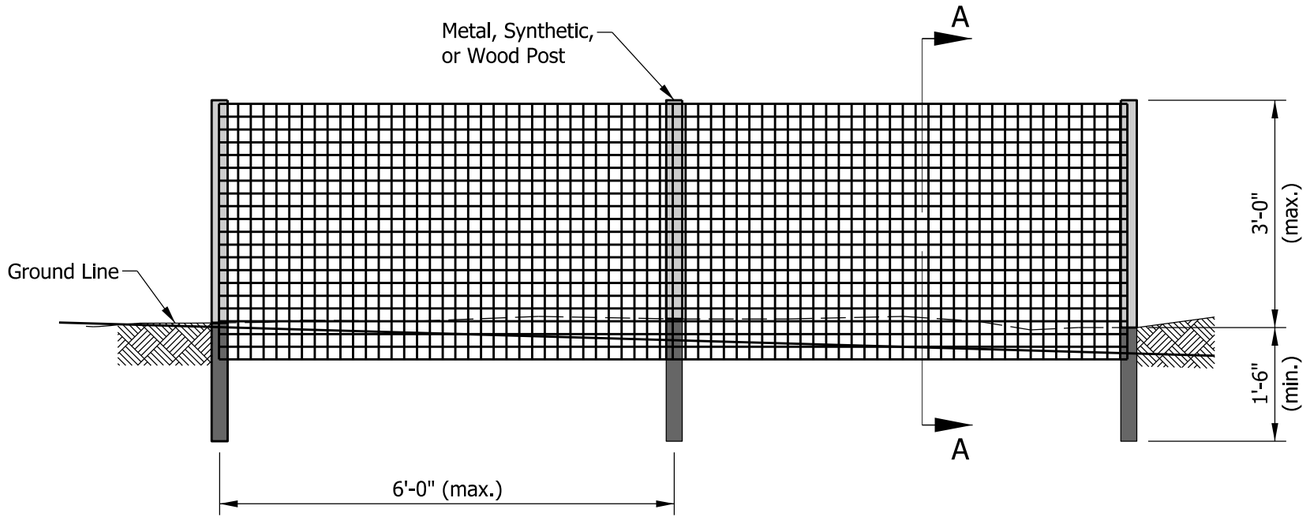

ELEVATION

NOTES:

1. Dimensions will vary based on right-of-way availability. Silt fence shall be placed as close as possible to the edge of construction limits.
2. The spacing of the tiebacks shall equal the spacing of the posts. Additional post depth or tiebacks may be required in unstable soils
3. Filter Sock shall be used instead of silt fence at or below Q_{100}.

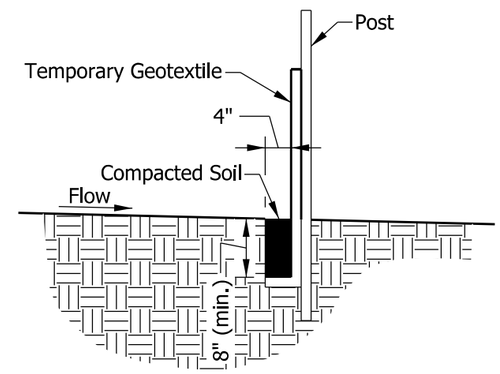

SECTION A-A

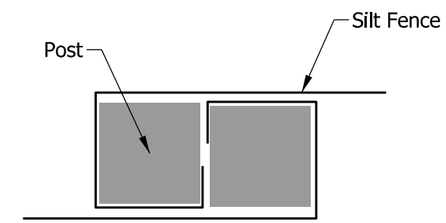

JOINT DETAIL
PLAN VIEW

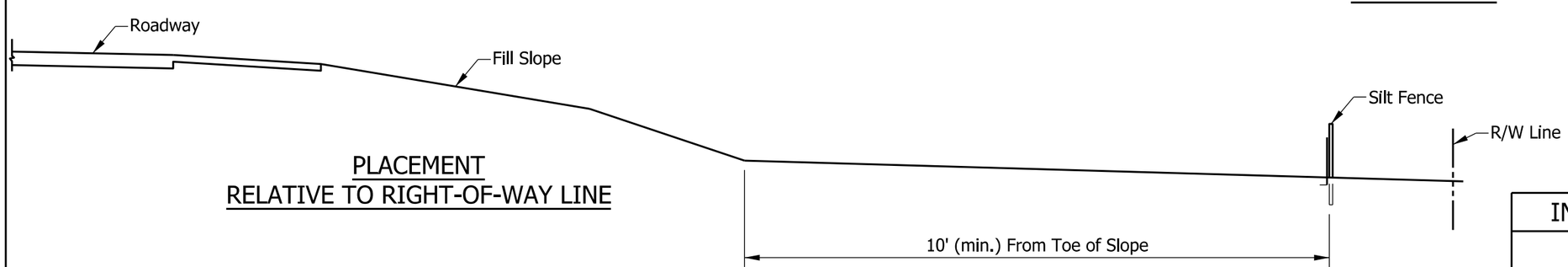

PLACEMENT
RELATIVE TO RIGHT-OF-WAY LINE

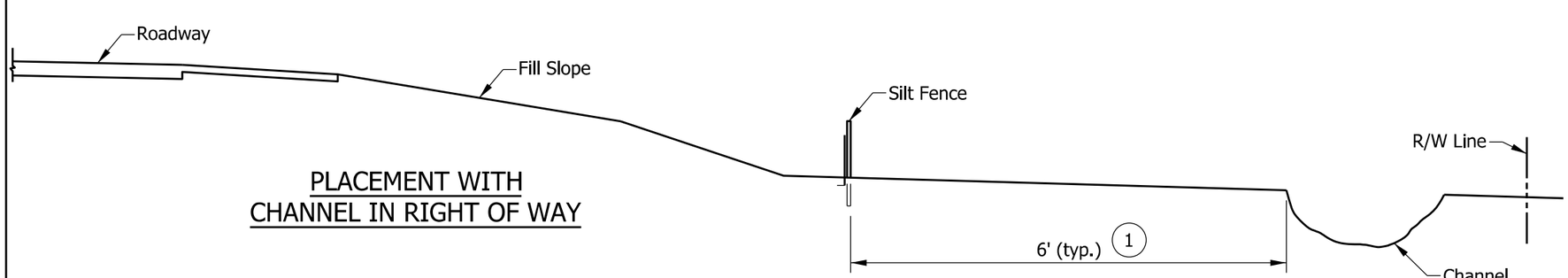

PLACEMENT WITH
CHANNEL IN RIGHT OF WAY

INDIANA DEPARTMENT OF TRANSPORTATION

PERIMETER PROTECTION,
SILT FENCE

SEPTEMBER 2019

STANDARD DRAWING NO. E 205-TECD-11

ELIZABETH W. PHILLIPS
REGISTERED
No. 10200124
STATE OF INDIANA
PROFESSIONAL ENGINEER

5/2/2019
DESIGN STANDARDS ENGINEER DATE

5/31/2019
CHIEF ENGINEER DATE

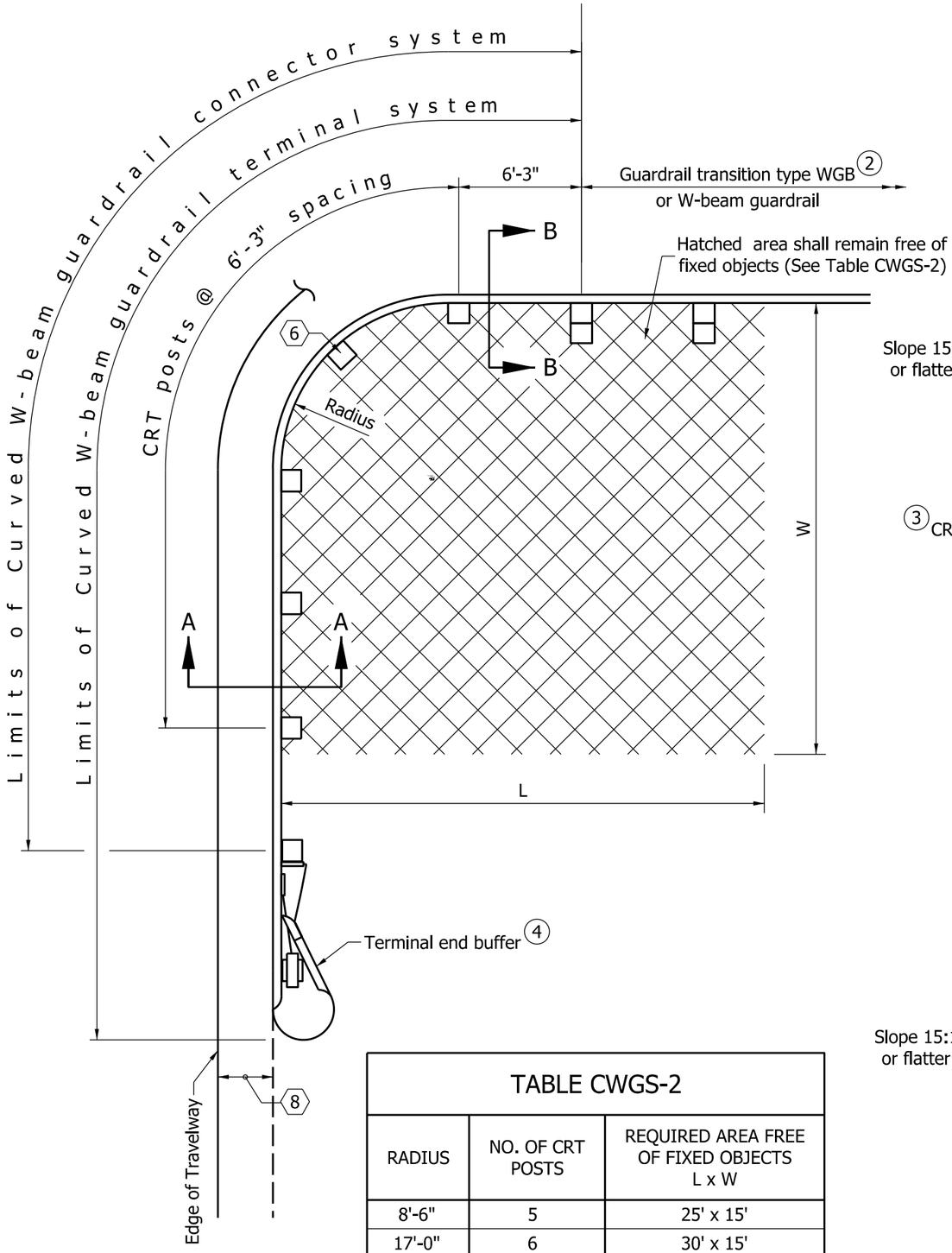

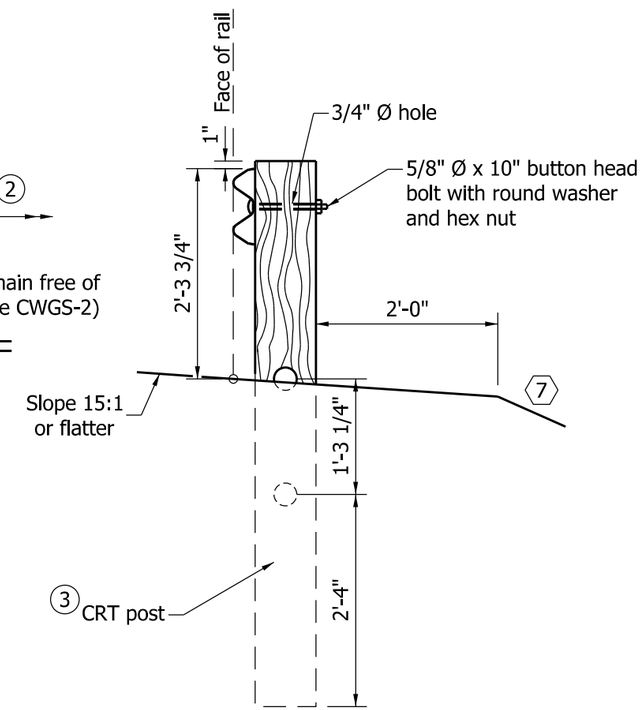

SECTION A-A

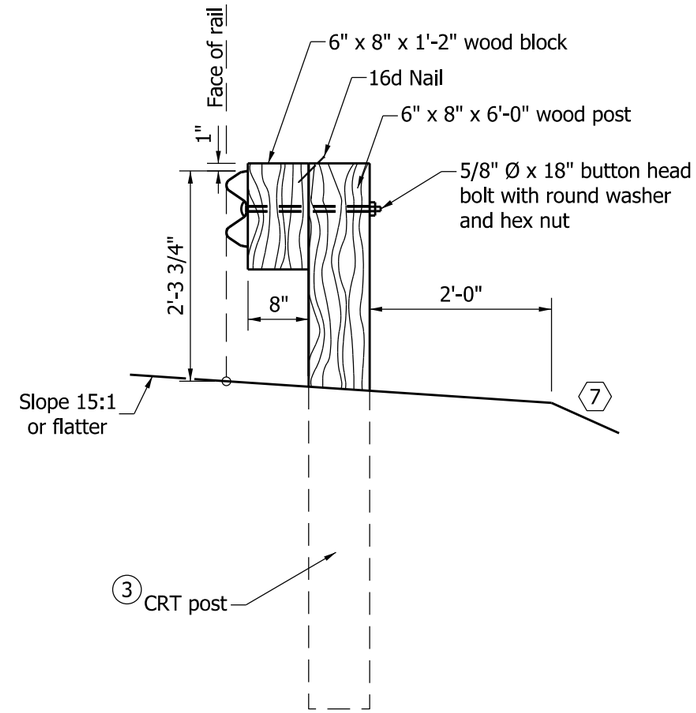

SECTION B-B

TABLE CWGS-2		
RADIUS	NO. OF CRT POSTS	REQUIRED AREA FREE OF FIXED OBJECTS L x W
8'-6"	5	25' x 15'
17'-0"	6	30' x 15'
25'-6"	8	40' x 20'
35'-0"	11	50' x 20'

NOTES:

1. See Standard Drawing E 601-CWGS-03 for General Notes.
2. (2) See Standard Drawing E 601-TWGB-02 for guardrail transition type WBG details.
3. (3) See Standard Drawing E 601-CWGS-06 for CRT post details.
4. (4) See Standard Drawing E 601-CWGS-04 and 05 for terminal end buffer details.

INDIANA DEPARTMENT OF TRANSPORTATION

CURVED W-BEAM GUARDRAIL SYSTEM

SEPTEMBER 2011

STANDARD DRAWING NO. E 601-CWGS-02

RICHARD L. VanCLEAVE REGISTERED No. 9750 STATE OF INDIANA PROFESSIONAL ENGINEER

DETAILS PLACED IN THIS FORMAT 09/04/12

/s/ Richard L. VanCleave 09/04/12
SUPERVISOR, ROADWAY STANDARDS DATE

/s/ Mark A. Miller 09/04/12
CHIEF ENGINEER DATE

GENERAL NOTES

1. This drawing shall be used in conjunction with Standard Drawings E 601-CWGS-01 through -06, and E 601-CWGT-01 and -02 where a curved W-beam guardrail system is specified.

2. The type of curved W-beam guardrail system to be used shall be as shown on the plans in accordance with Table CWGS-3.

3. Except where otherwise shown, all hardware and installation shall be the same as for the guardrail specified for the adjacent run.

4. A curved W-beam guardrail terminal system shall be used to terminate a run of guardrail only at a driveway. For a public road approach, a curved W-beam guardrail connector system shall be used.

5. A maximum of two guardrail panels may be omitted from the curved W-beam guardrail terminal system only where the bridge railing falls outside of the clear zone and the plans specifically state that panels are to be omitted. See Table CWGS-03 for the number of guardrail panels to be removed for each type of curved W-beam guardrail system.

6. For the 8'-6" radius curved W-beam guardrail terminal system, guardrail shall not be bolted to this post.

7. The embankment slope behind the curved W-beam guardrail system shall be 2:1 or flatter.

8. A minimum 4 ft width shoulder shall be used with a 15 ft minimum drive radius.

9. This dimension shall be 5 ft for the 35 ft radius curved W-beam guardrail connector system.

TABLE CWGS-3

CURVED W-BEAM GUARDRAIL SYSTEMS

TYPE	RADIUS	NUMBER OF 6'-3" PANELS REMOVED
TERMINAL SYSTEM		
1	8'-6"	0
2	8'-6"	1
3	8'-6"	2
4	17'-0"	0
5	17'-0"	1
6	17'-0"	2
7	25'-0"	0
8	25'-0"	1
9	25'-0"	2
CONNECTOR SYSTEM		
1	25'-0"	0
2	35'-0"	0

INDIANA DEPARTMENT OF TRANSPORTATION

CURVED W-BEAM
GUARDRAIL SYSTEM

SEPTEMBER 1999

STANDARD DRAWING NO. E 601-CWGS-03

RICHARD L. VanCLEAVE
REGISTERED
No. 9750
STATE OF
INDIANA
PROFESSIONAL ENGINEER

DETAILS PLACED IN THIS FORMAT 09/04/12

/s/ Richard L. VanCleave 09/04/12
SUPERVISOR, ROADWAY STANDARDS DATE

/s/ Mark A. Miller 09/04/12
CHIEF ENGINEER DATE

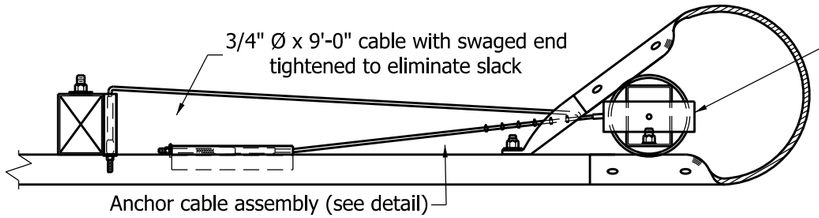

PLAN

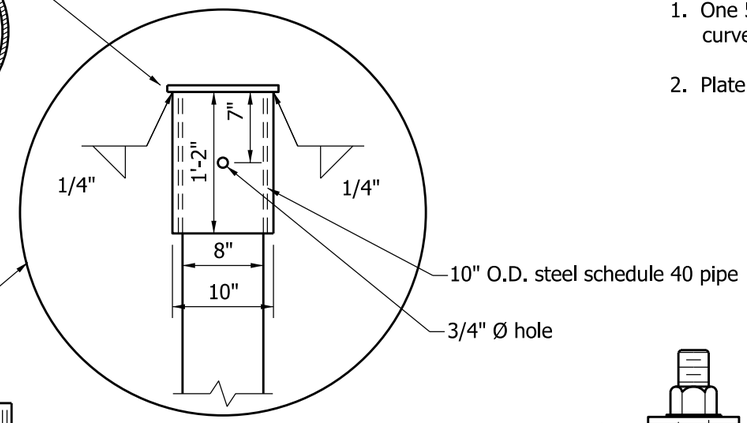

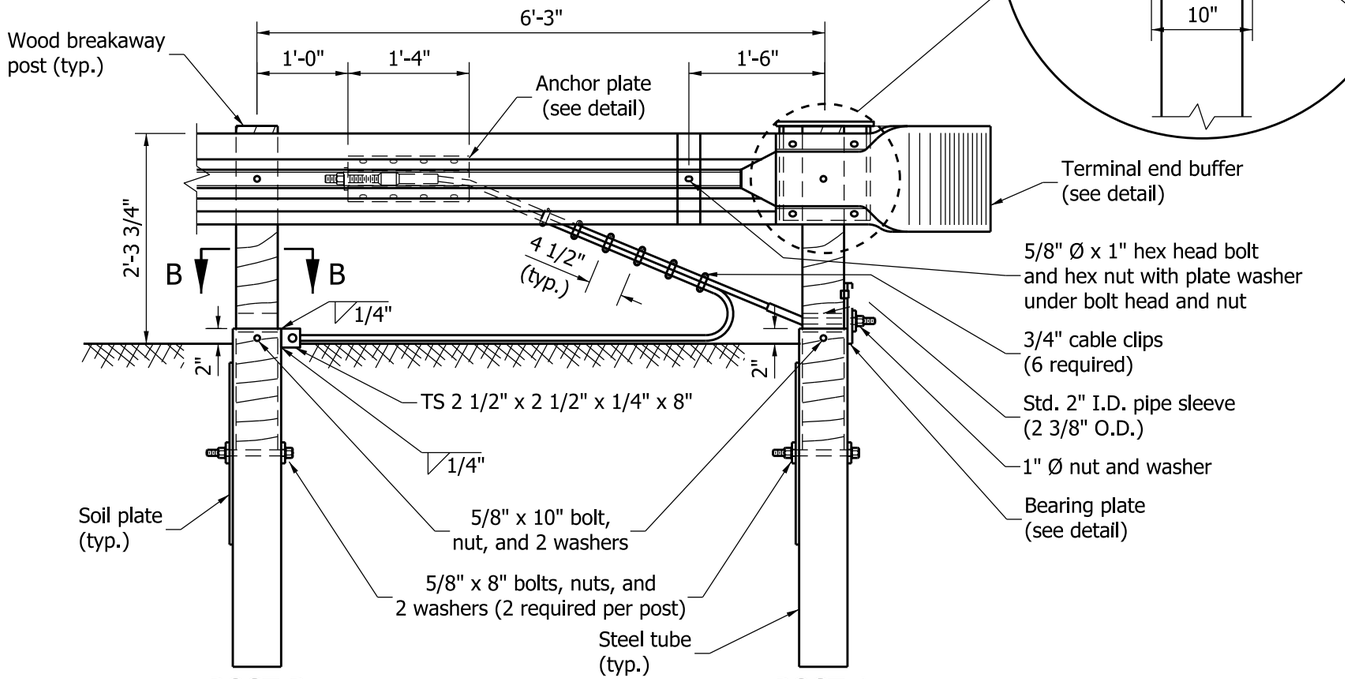

POST B

TYPE 5 ANCHOR ELEVATION

POST A

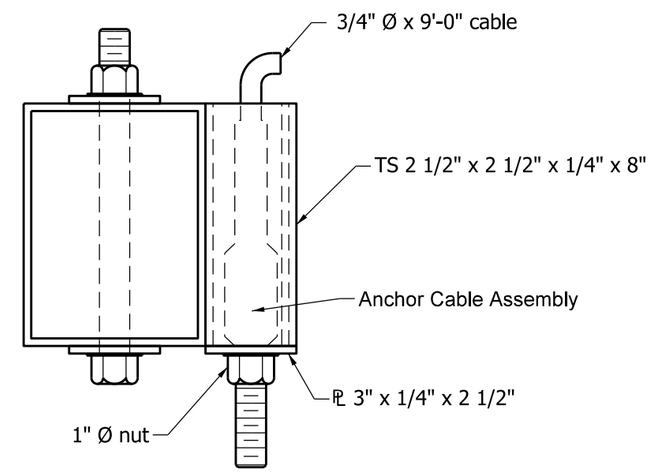

SECTION B-B

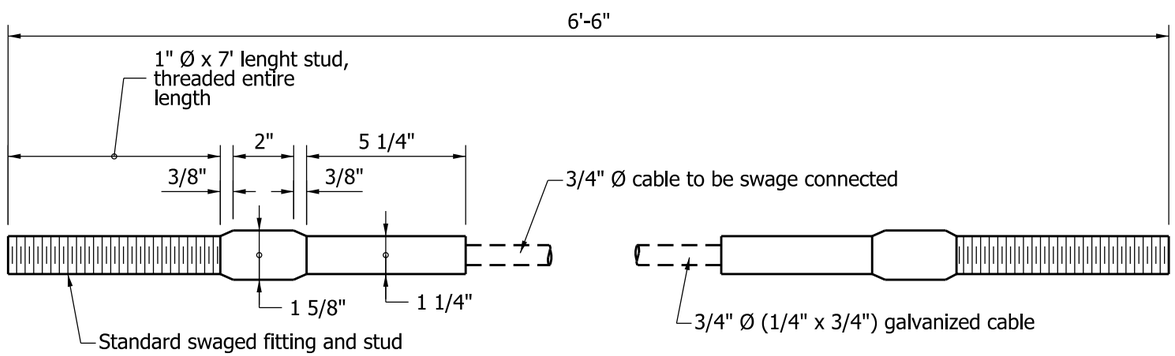

ANCHOR CABLE ASSEMBLY

NOTES:

1. One 5/8" Ø x 10" bolt with nut and washer is required per curved W-beam steel tube and post.
2. Plate washers shall be used only where indicated.

INDIANA DEPARTMENT OF TRANSPORTATION

CURVED W-BEAM GUARDRAIL SYSTEM

SETEMBER 2011

STANDARD DRAWING NO. E 601-CWGS-04

RICHARD L. VanCLEAVE REGISTERED No. 9750 STATE OF INDIANA PROFESSIONAL ENGINEER

DESIGN STANDARDS ENGINEER

/s/ Richard L. VanCleave 09/01/11
DESIGN STANDARDS ENGINEER DATE

/s/ Mark A. Miller 09/01/11
CHIEF HIGHWAY ENGINEER DATE

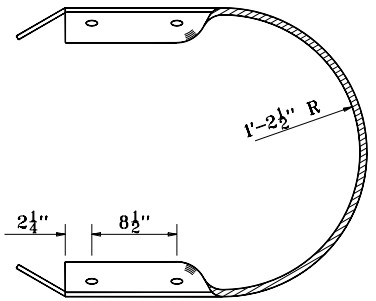

TOP VIEW

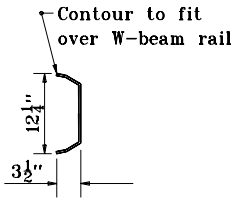

SECTION A-A

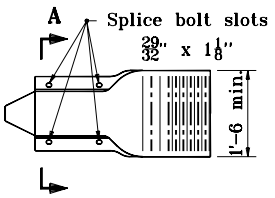

SIDE VIEW

W-BEAM END SECTION (BUFFER)

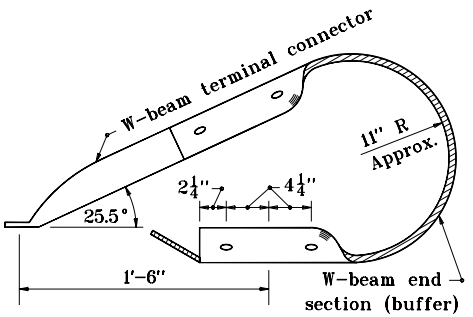

TOP VIEW

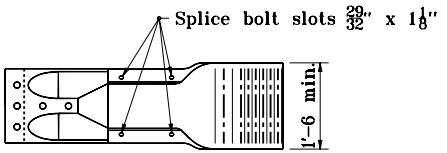

SIDE VIEW

TERMINAL END BUFFER

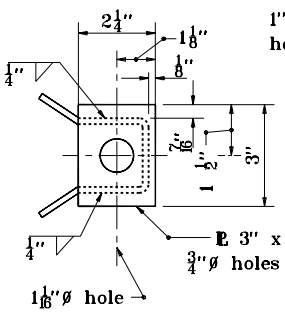

LEFT END VIEW

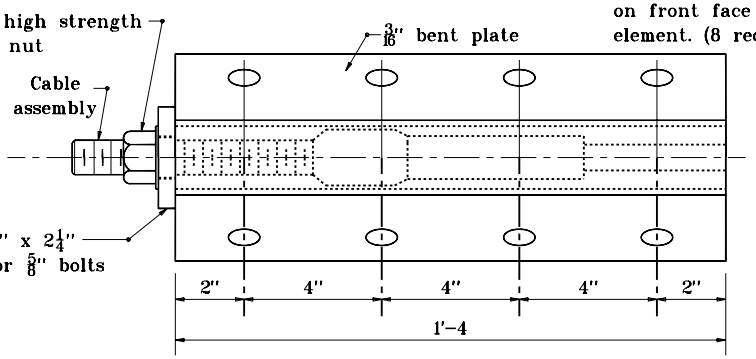

ANCHOR PLATE

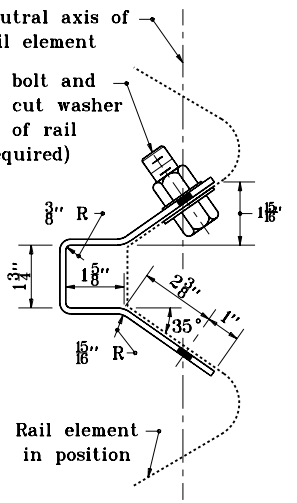

RIGHT END VIEW

GENERAL NOTES

1. This sheet shall be used in conjuction with Standard Drawings E 601-CWGS-01, 02, 03, and 06.
2. An alternate single piece having a similar dimensional shape to the terminal end buffer and mating with the W-beam guardrail may be used.
3. The W-beam terminal connector shall be steel of 0.138 inch thickness (10 gauge).
4. If the W-beam terminal connector is lapped on the outside of the guardrail, a galvanized 1" I.D. 2" O.D., 0.134" thick, narrow plain washer shall be placed under the splice bolt heads.
5. Attach the W-beam to the steel pipe with a ⅝" diameter x 1¼" length button head bolt with no washer. No connection to the post is required.
6. Nuts for the anchor cable assembly shall be hand tightened, plus one complete turn at the anchor plate end. All other nuts shall be torqured to 50 ft.-lbs.

INDIANA DEPARTMENT OF TRANSPORTATION

CURVED W-BEAM GUARDRAIL SYSTEM

APRIL 1996

STANDARD DRAWING NO. **E 601-CWGS-05**

ANTHONY L. UREMOVICH REGISTERED No. 18095 STATE OF INDIANA PROFESSIONAL ENGINEER

DESIGN STANDARDS ENGINEER

DETAILS PLACED IN THIS FORMAT	11-15-99
/s/ Anthony L. Uremovich DESIGN STANDARDS ENGINEER	11-15-99 DATE
/s/ Firooz Zandi CHIEF HIGHWAY ENGINEER	11-15-99 DATE
ORIGINALLY APPROVED	4-01-96

NOTE:

1. The TS 2 1/2" x 2 1/2" structural tube shall be welded to Post B only. See Standard Drawing E 601-CWGS-04 for location of Post B.

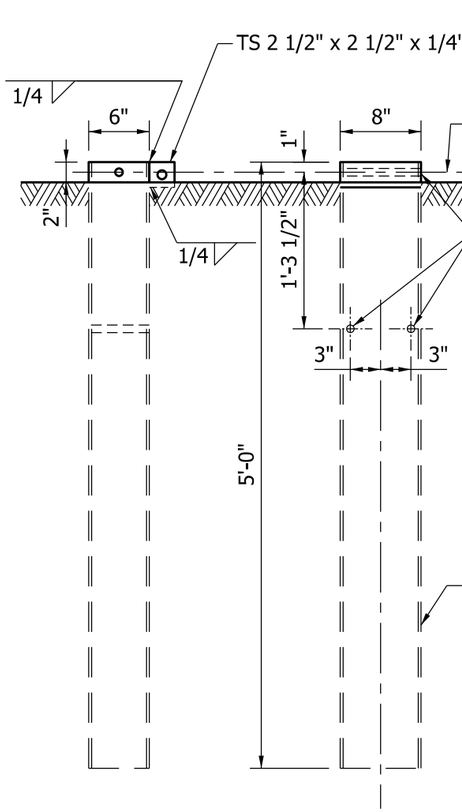

STEEL TUBE POST B

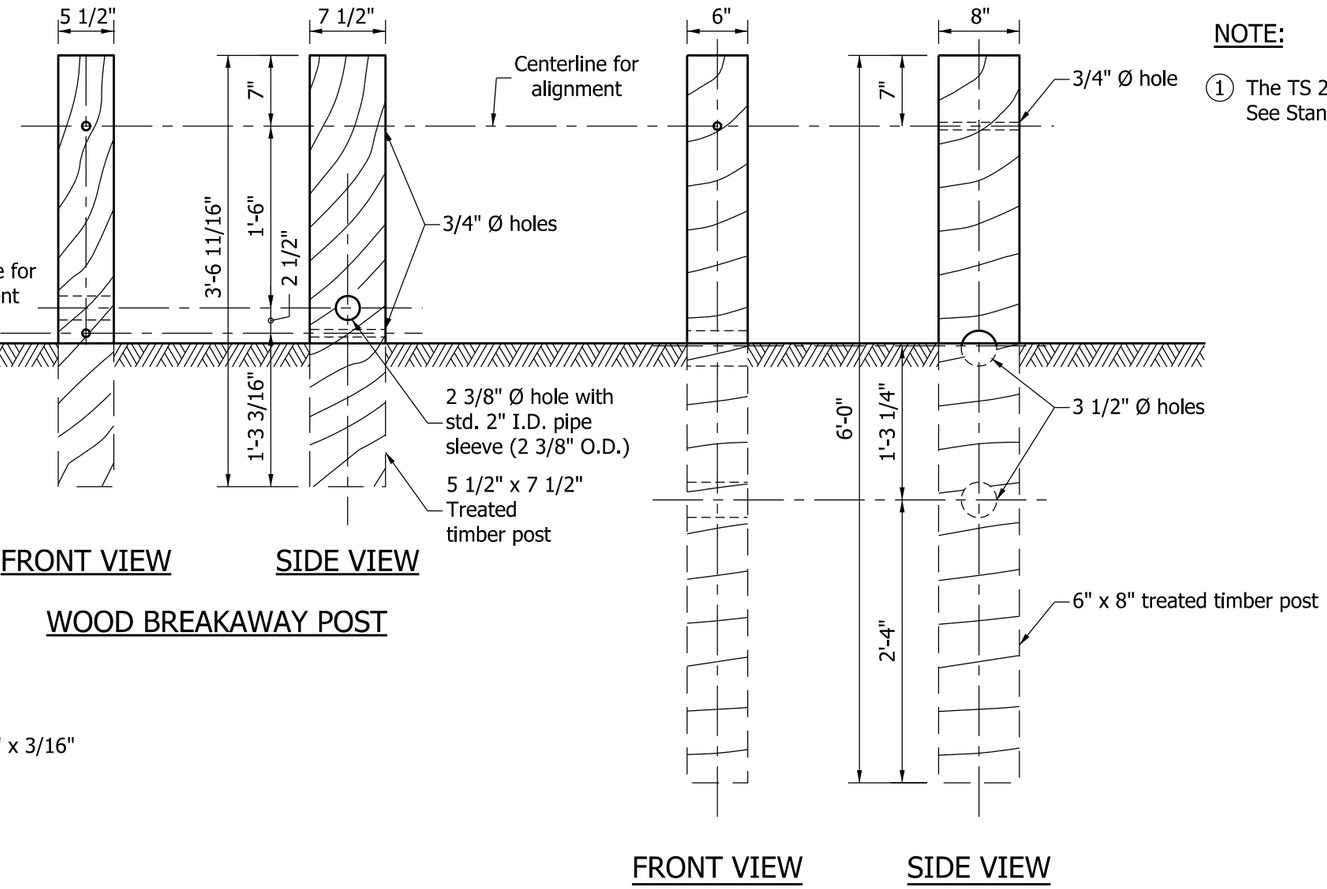

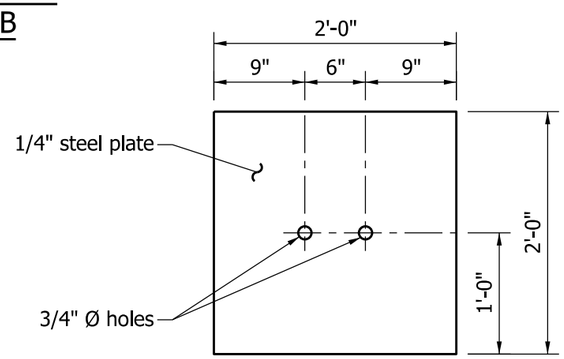

SOIL PLATE

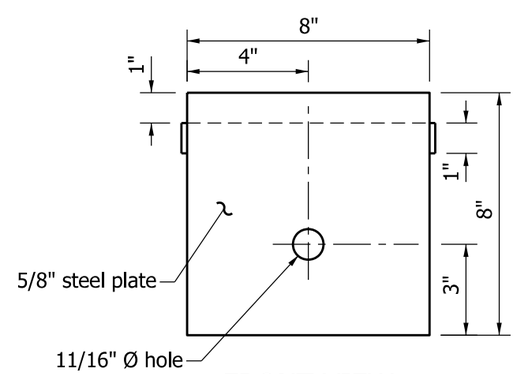

FRONT VIEW

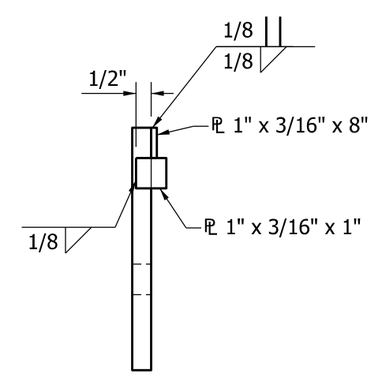

SIDE VIEW

BEARING PLATE

INDIANA DEPARTMENT OF TRANSPORTATION	
CURVED W-BEAM GUARDRAIL SYSTEM SEPTEMBER 2011	
STANDARD DRAWING NO. E 601-CWGS-06	
DETAILS PLACED IN THIS FORMAT	09/04/12
/s/ Richard L. VanCleave SUPERVISOR, ROADWAY STANDARDS	09/04/12 DATE
/s/ Mark A. Miller CHIEF ENGINEER	09/04/12 DATE

RICHARD L. VanCLEAVE REGISTERED No. 9750 STATE OF INDIANA PROFESSIONAL ENGINEER

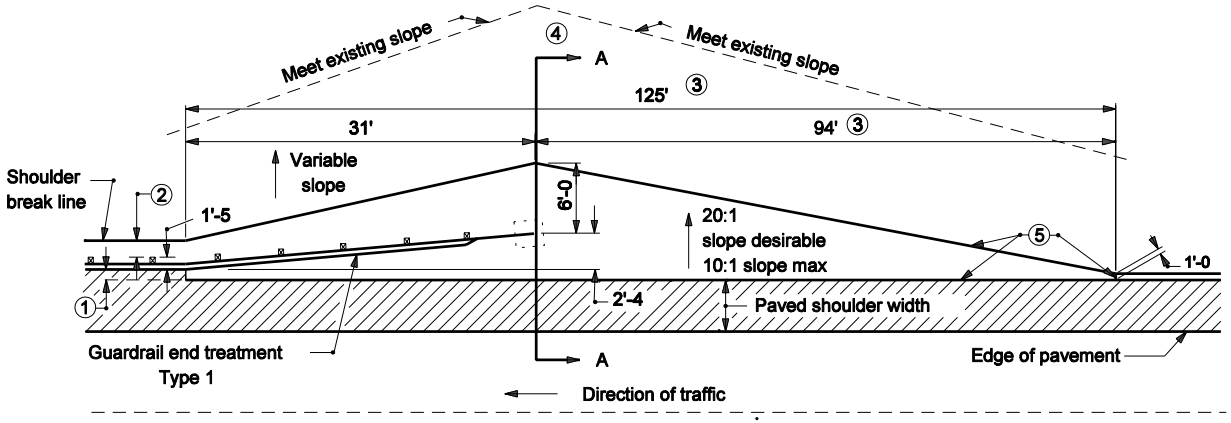

PLAN VIEW

GRADING DETAIL FOR GUARDRAIL END TREATMENT TYPE I

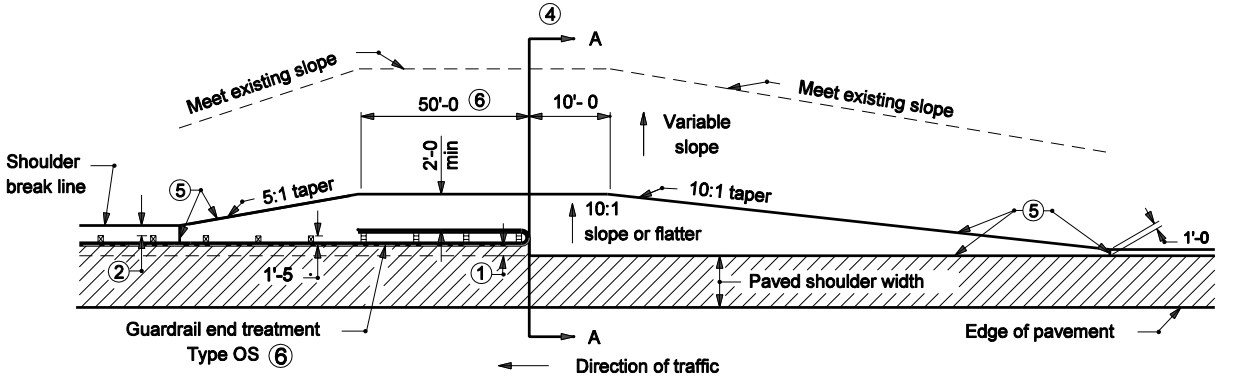

PLAN VIEW

GRADING DETAIL FOR GUARDRAIL END TREATMENT TYPE OS

NOTES:

① The required guardrail offset shall be 0 to 2'-0" desirable as specified in The plans. The offset used between the the edge of required shoulder and the face of rail shall also be used to establish the berm width at the end of the guardrail end treatment.

② This distance may vary from 0 to 2'-0" desirable.

③ These dimensions are based on a 2'-0" guardrail offset and must be adjusted for other offset distances to maintain a 10:1 taper.

④ Grading profiles at Section A-A for types OS and type I guardrail end treatments are shown on Standard Drawings E 601-GRET-08, and -09.

⑤ Limits of compacted aggregate.

⑥ Length and width of OS Unit Test Level 3 (TL-3)
Length = 50'-0"
Width = 2'-0"

INDIANA DEPARTMENT OF TRANSPORTATION

GRADING AT GUARDRAIL END TREATMENTS

March 2004

STANDARD DRAWING NO. E 601-GRET-06

ANTHONY L. UREMOVICH REGISTERED No. 18095 STATE OF INDIANA PROFESSIONAL ENGINEER

DESIGN STANDARDS ENGINEER

/s/ Anthony L. Uremovich 3-01-04
DESIGN STANDARDS ENGINEER DATE

/s/ Richard K. Smutzer 3-01-04
CHIEF HIGHWAY ENGINEER DATE

NOTES:

1. Grading cross section Option 1 is most desirable and shall be used on new construction. Option 7 is least desirable. The grading cross section to be used shall be as detailed or specified on the plans. A more desirable option may be used in lieu of the option specified.

② The backslope on Option 3 shall not exceed 2:1 on 3R projects.

③ Benching required for existing slopes steeper than 4:1.

④ See plan views on Standard Drawing E 601-GRET-06.

⑤ Plow or deeply scarify for existing slopes 4:1 or flatter.

6. Section A-A Options 1, 2, and 3 may be used with guardrail end treatment type I or OS.

Recoverable Proposed Slopes (Options 1, 2, and 3)

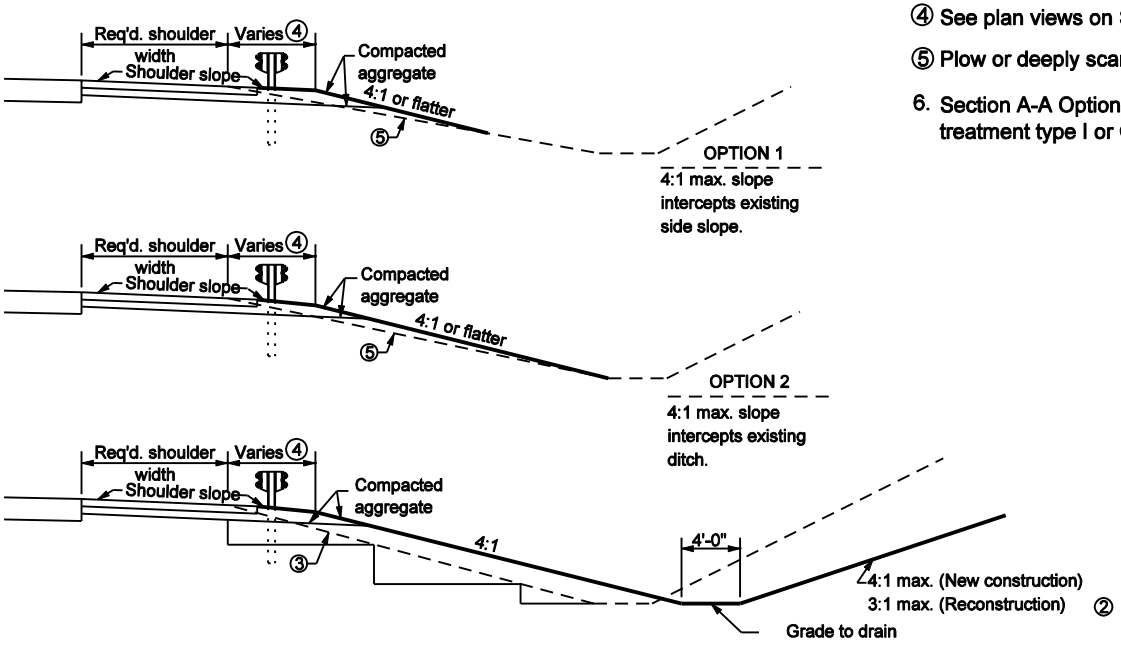

GRADING CROSS SECTIONS AT SECTION A-A

INDIANA DEPARTMENT OF TRANSPORTATION

GRADING AT GUARDRAIL END TREATMENT

SEPTMBER 2002

STANDARD DRAWING NO. E 601-GRET-08

RICHARD L. VanCLEAVE REGISTERED No. 9750 STATE OF INDIANA PROFESSIONAL ENGINEER

DESIGN STANDARDS ENGINEER

/s/ Richard L. VanCleave 9-03-02
DESIGN STANDARDS ENGINEER DATE

/s/ Richard K. Smulzer 9-03-02
CHIEF HIGHWAY ENGINEER DATE

Non-Recoverable Proposed Slopes (Options 4, 5, 6 and 7)

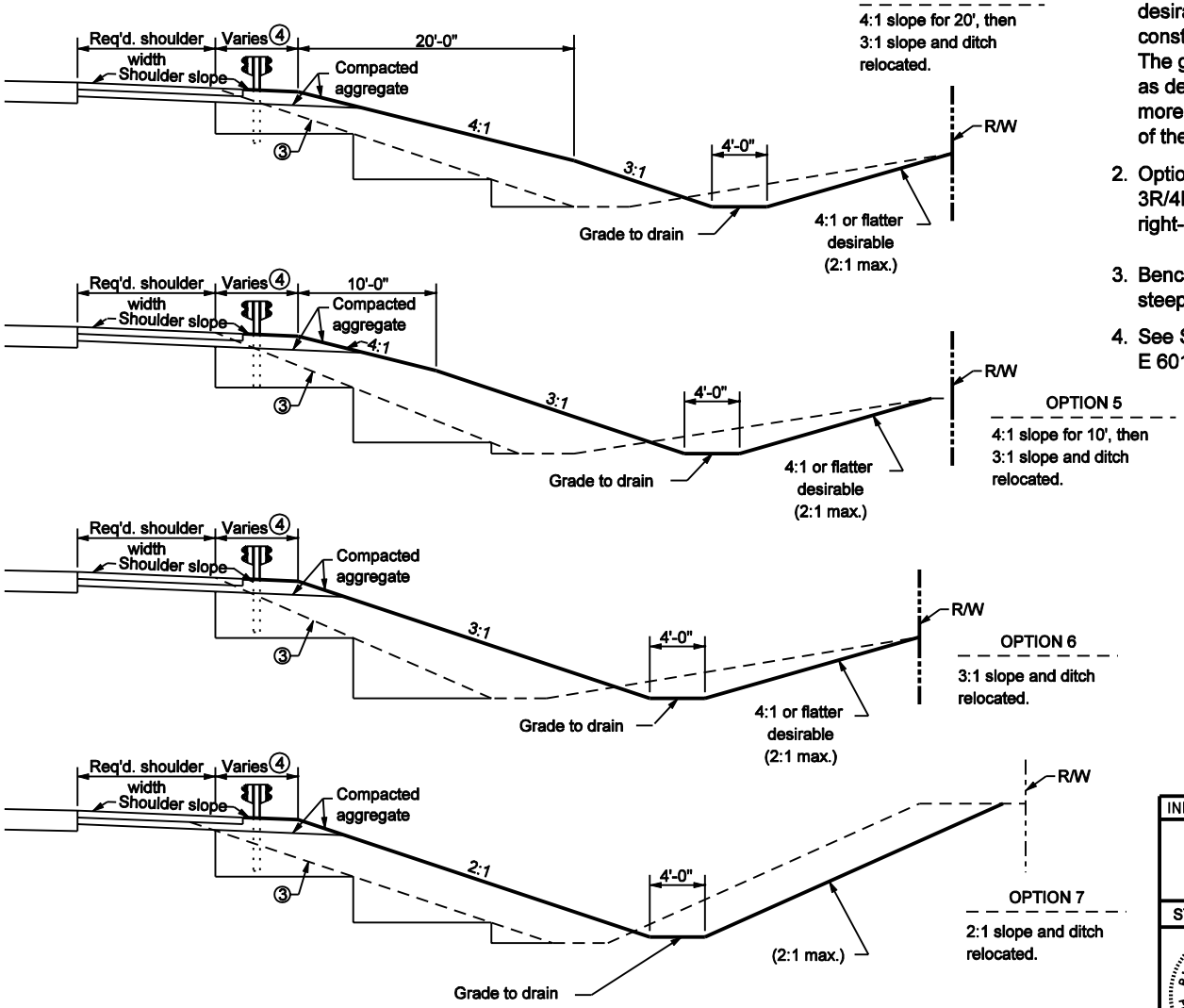

GRADING CROSS SECTIONS AT SECTION A-A

NOTES:

① Grading cross section Option 1 is most desirable and shall be used on new construction. Option 7 is least desirable. The grading cross section to used shall be as detailed or specified on the plans. A more desirable option may be used in lieu of the option specified.

2. Options 4 through 7 may only be used on a 3R/4R partial reconstruction project with right-of-way restrictions.

3. Benching required for existing slopes steeper than 4:1.

4. See Standard Drawing E 601-GRET-06 for plan views.

INDIANA DEPARTMENT OF TRANSPORTATION

GRADING AT GUARDRAIL END TREATMENTS

SEPTEMBER 2002

STANDARD DRAWING NO. E 601-GRET-09

RICHARD L. VanCLEAVE REGISTERED No. 9750 STATE OF INDIANA PROFESSIONAL ENGINEER

DESIGN STANDARDS ENGINEER

/s/ Richard L. VanCleave 9-03-02
DESIGN STANDARDS ENGINEER DATE

/s/ Richard K. Smulzer 9-03-02
CHIEF HIGHWAY ENGINEER DATE

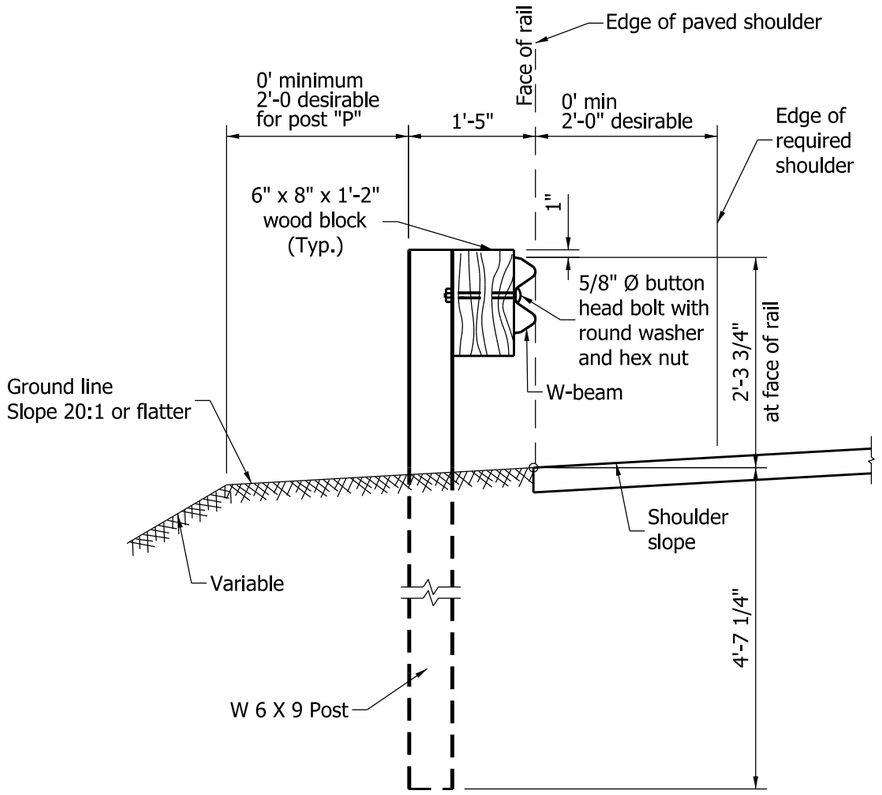

TYPICAL W-BEAM INSTALLATION

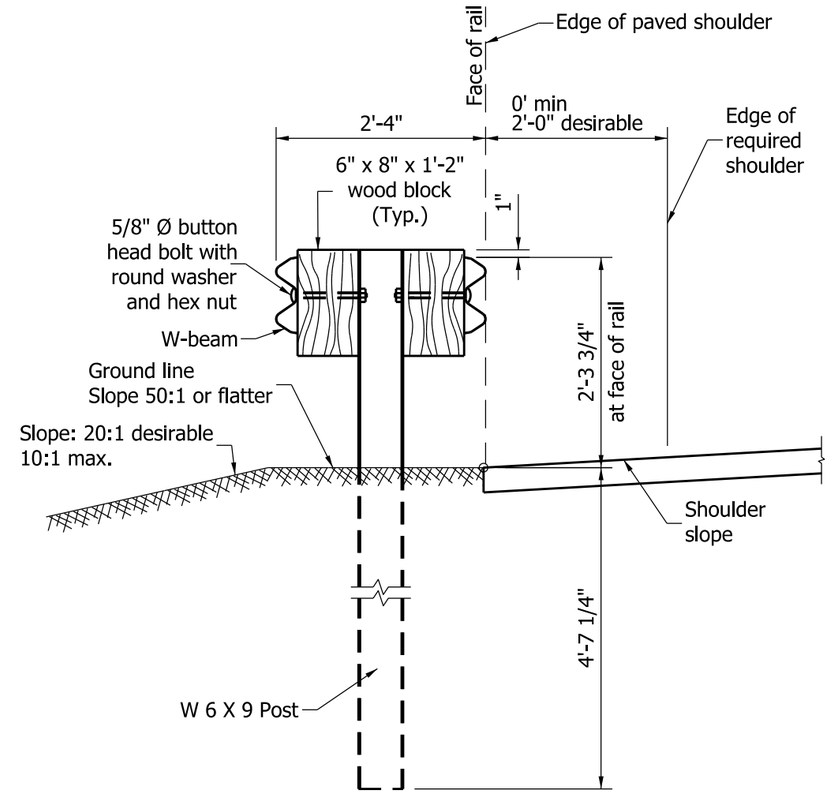

TYPICAL DOUBLE FACED W-BEAM INSTALLATION

INDIANA DEPARTMENT OF TRANSPORTATION

W-BEAM
GUARDRAIL ASSEMBLIES

SEPTEMBER 2011

STANDARD DRAWING NO. E 601-WBGA-01

RICHARD L. VanCLEAVE
REGISTERED
No.
9750
STATE OF
INDIANA
PROFESSIONAL ENGINEER

DESIGN STANDARDS ENGINEER

/s/ Richard L. VanCleave 09/01/11
DESIGN STANDARDS ENGINEER DATE

/s/ Mark A. Miller 09/01/11
CHIEF HIGHWAY ENGINEER DATE

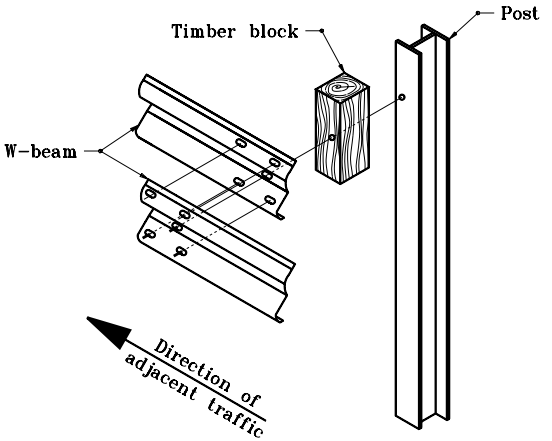

W-BEAM SPLICE CONNECTION DETAIL AT POST

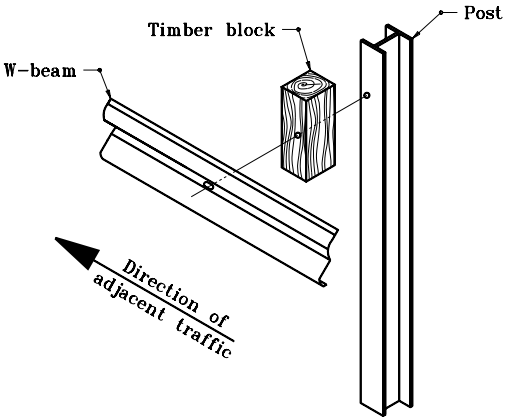

W-BEAM SPLICE CONNECTION DETAIL AT POST FOR NON-SPLICE CONNECTIONS

INDIANA DEPARTMENT OF TRANSPORTATION

W-BEAM GUARDRAIL ASSEMBLIES

SEPTEMBER 1998

STANDARD DRAWING NO. **E 601-WBGA-03**

ANTHONY L. UREMOVICH REGISTERED No. 18095 STATE OF INDIANA PROFESSIONAL ENGINEER

DESIGN STANDARDS ENGINEER

DETAILS PLACED IN THIS FORMAT	11-15-99
/s/ Anthony L. Uremovich DESIGN STANDARDS ENGINEER	11-15-99 DATE
/s/ Firooz Zandi CHIEF HIGHWAY ENGINEER	11-15-99 DATE
ORIGINALLY APPROVED	9-01-98

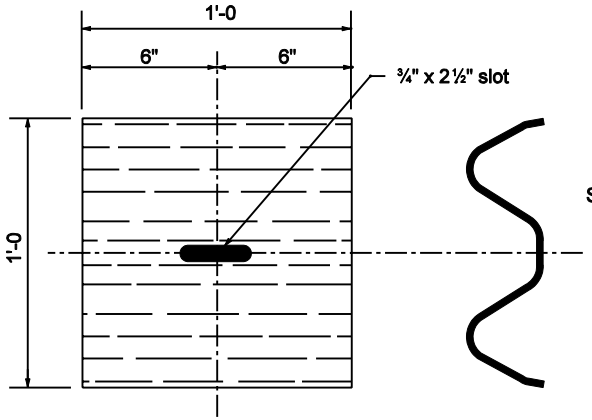

W-BEAM BACKUP PLATE

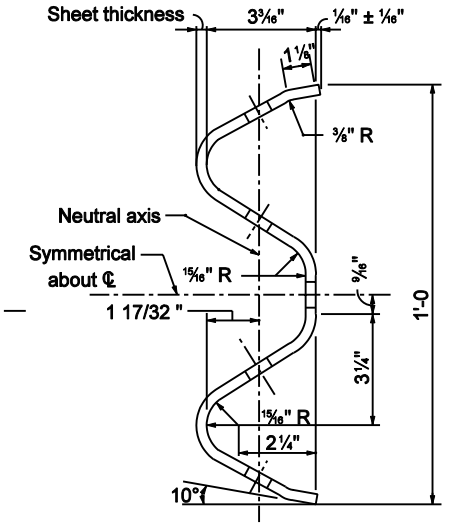

SECTION THROUGH BEAM ELEMENT

GENERAL NOTES

1. This sheet shall be used when W-beam guardrail is specified. This sheet shall also be used when a W-beam guardrail system requires the use of standard W-beam guardrail components.
2. The details on ths sheet are for the standard components of W-beam guardrail.

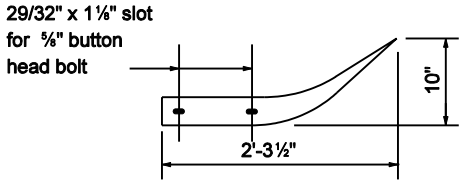

TOP VIEW

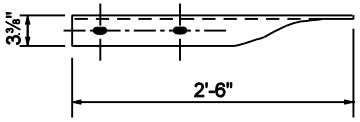

TOP VIEW

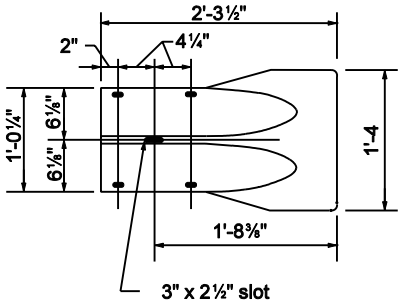

FRONT VIEW

CURVED TERMINAL END

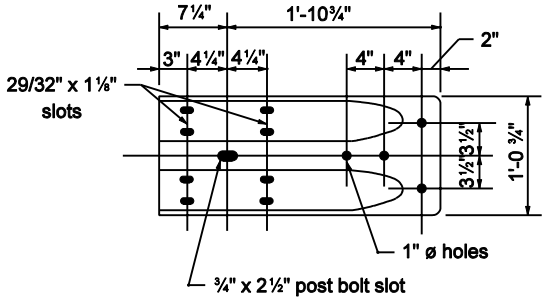

FRONT VIEW

W-BEAM TERMINAL CONNECTOR

INDIANA DEPARTMENT OF TRANSPORTATION

W-BEAM GUARDRAIL COMPONENTS

MARCH 2003

STANDARD DRAWING NO. E 601-WBGC-01

RICHARD L. VanCLEAVE REGISTERED No. 9750 STATE OF INDIANA PROFESSIONAL ENGINEER

DESIGN STANDARDS ENGINEER

/s/ Richard L. VanCleave 3-03-03
DESIGN STANDARDS ENGINEER DATE

/s/ Richard K. Smutzer 3-03-03
CHIEF HIGHWAY ENGINEER DATE

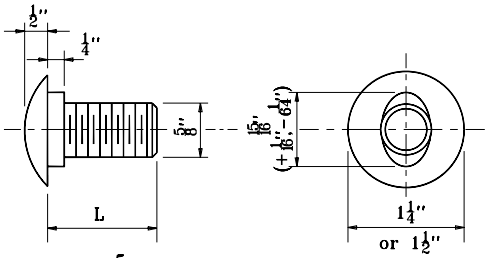

5/8" BUTTON HEAD BOLT

L	THREAD LENGTH
1 1/4"	Full Length Thread
2"	1 1/2" Min. Thread Length
8 1/2"	1 3/4" Min. Thread Length
1'-6	2 1/2" Min. Thread Length
2'-1	2" Min. Thread Length

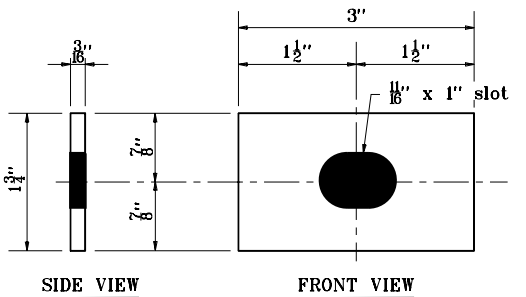

RECTANGULAR PLATE WASHER

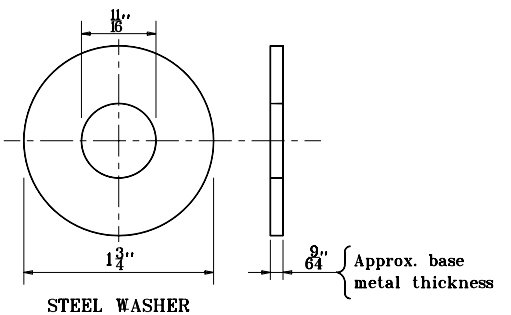

WASHER FOR 5/8" BOLT

INDIANA DEPARTMENT OF TRANSPORTATION

W-BEAM GUARDRAIL COMPONENTS

MAY 2000

STANDARD DRAWING NO. **E 601-WBGC-02**

ANTHONY L. UREMOVICH REGISTERED No. 18095 STATE OF INDIANA PROFESSIONAL ENGINEER

DESIGN STANDARDS ENGINEER

/s/ Anthony L. Uremovich 5-01-00
DESIGN STANDARDS ENGINEER DATE

/s/ Firooz Zandi 5-01-00
CHIEF HIGHWAY ENGINEER DATE

NOTES:

1. These dimensions shall be adjusted as required to accommodate steel post flange.
2. Timber blocks shown in either Detail A or Detail B may be used.

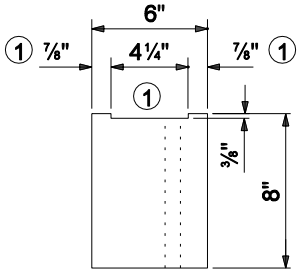

TOP VIEW

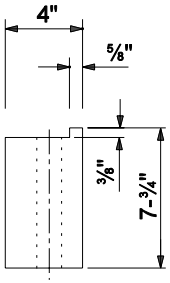

TOP VIEW

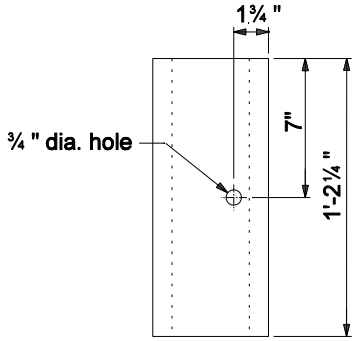

FRONT VIEW

TIMBER BLOCK DETAIL A

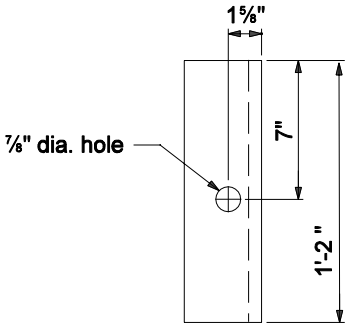

FRONT VIEW

TIMBER BLOCK DETAIL B

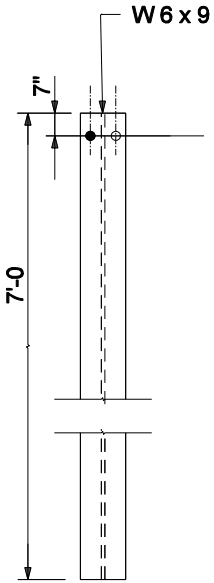

FRONT VIEW

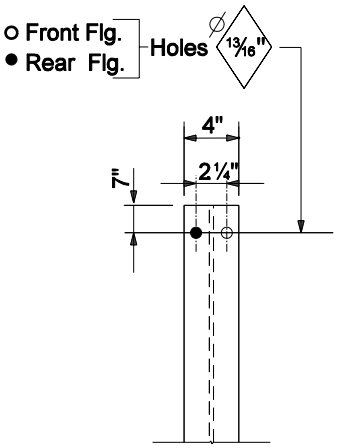

FRONT VIEW

HOLE PATTERN

STEEL POST DETAIL

INDIANA DEPARTMENT OF TRANSPORTATION

W - BEAM
GUARDRAIL COMPONENTS

SEPTEMBER 2004

STANDARD DRAWING NO. E 601-WBGC-03

RICHARD L. VanCLEAVE REGISTERED No. 9750 STATE OF INDIANA PROFESSIONAL ENGINEER

DESIGN STANDARDS ENGINEER

/s/ Richard L. VanCleave 3-01-04
DESIGN STANDARDS ENGINEER DATE

/s/ Richard K. Smutzer 3-01-04
CHIEF HIGHWAY ENGINEER DATE

INDEX

SHEET NO.	SUBJECT
1	Drawing Index and General Notes
2	Class I Drive (Residential) Plan
3	Class II Drive (Residential) Plan
4	Class III Drive (Commercial) Plan
5	Class IV Drive (Commercial) Plan
6	Class V Drive (Field Entrance) Plan and Section
7	Class VI Drive (Industrial) Plan and Section
8	Class VII Drive (Industrial) Plan
9	Class I and Class III Drives Approach Grades
10	Class II and Class IV Drives Sections
11	Class II, IV & V Drives Approach Grades
12	Class VI Drive Approach Grades
13	Class VII Drive Approach Grades
14	Joint Placement, Corner Reinforcing, Monolithic Curb, and Concrete Curb and Gutter Details
15	Private Drive Crossover Plans
16	Private and Commercial Drive Crossover Sections
17	Commerical Drive Crossover Plans
18	Pavement Wedge and Pay Limits for Class II, IV and VII Drives

GENERAL NOTES

1. When the maximum approach grade of ±10% does not meet the grade of the existing drive before the R/W line, the approach grade of ±10% shall extend beyond the R/W to the point of intersection with the existing driveway grade. Construction beyond the R/W line shall be done in temporary R/W.
2. The appropriate pipe end treatment should be provided for pipes located either inside the clear zone or outside the clear zone.
3. The minimum driveway pavement sections for Class III, IV, VI and VII Drives have been designed for 400 trucks per day. If the truck traffic count is greater than 400 per day, the required pavement section shall be as shown elsewhere on the plans.
4. For Class III, IV, VI and VII Drives, if length of the driveway is more than 15 feet, then D-1 contraction joints are required in transverse direction. Spacing shall be 1/2 the length of the driveway or 15 feet max.
5. Embankment slopes within the mainline clear zone for new construction/reconstruction projects or within the obstruction-free zone for 3R projects should be as shown in the table on Standard Drawing E 610-PRAP-01. Outside the clear zone or the obstruction-free zone, the embankment slopes should desirably be 4:1 but not steeper than 3:1.

INDIANA DEPARTMENT OF TRANSPORTATION

INDEX
GENERAL NOTES AND LEGEND

SEPTEMBER 2019

STANDARD DRAWING NO. E 610-DRIV-01

ELIZABETH W. PHILLIPS
REGISTERED
No.
10200124
STATE OF
INDIANA
PROFESSIONAL ENGINEER

5/1/2019
DESIGN STANDARDS ENGINEER DATE

6/5/2019
CHIEF ENGINEER DATE

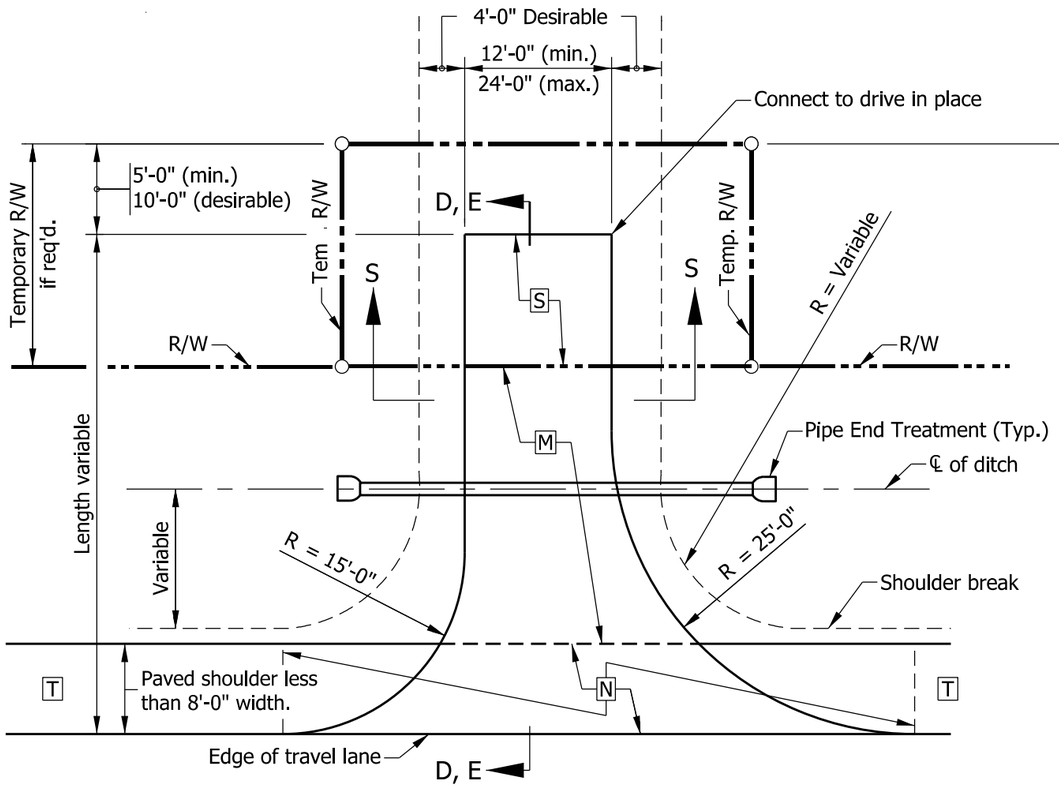

PLAN VIEW

(PAVED SHOULDER LESS THAN 8'-0" IN WIDTH OR UNPAVED SHOULDER)

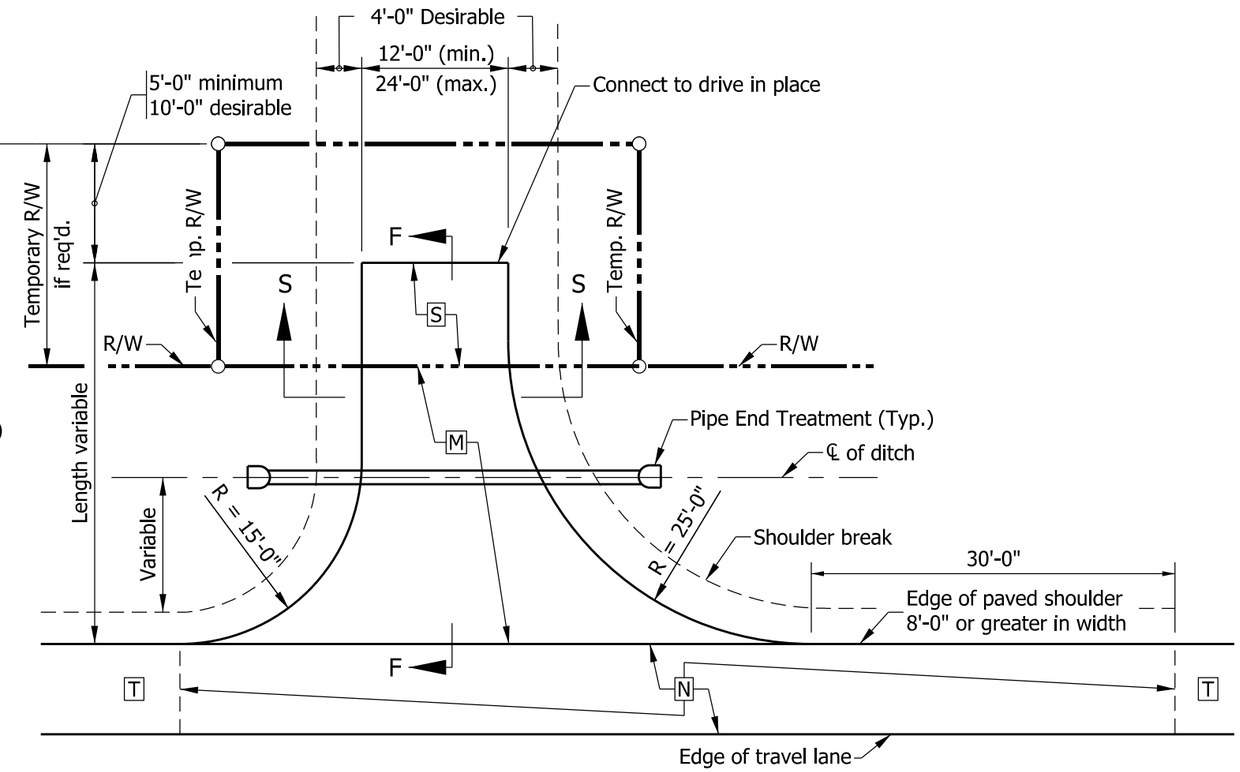

PLAN VIEW

(PAVED SHOULDER 8'-0" OR GREATER IN WIDTH)

NOTES:

1. See Standard Drawing E 610-DRIV-10 for Section S-S.
2. See Standard Drawing E 610-DRIV-11 for Sections D-D, E-E and F-F for approach grades.
3. The radii for PCCP Class II drives shall be constructed using corner reinforcement as detailed in Standard Drawing E 610-DRIV-14.
4. For PCCP Drives see Standard Drawing E 610-DRIV-14 for joint placement details.

LEGEND

M HMA for Approaches, Type B
165#/syd HMA Surface Type B on
275#/syd HMA Intermediate Type B on
6" Compacted Aggregate No. 53, on
Subgrade Treatment Type II (6 in. Coarse Aggregate No. 53)
or
PCCP for Approaches, 6 in., on
Dense Graded Subbase, 6 in., on
Subgrade Treatment Type II (6 in. Coarse Aggregate No. 53)

N The greater thickness of either the drive M or the paved shoulder T section.

S For type and thickness equivalent to surface in place, see plans.

T Plan shoulder section.

INDIANA DEPARTMENT OF TRANSPORTATION

CLASS II DRIVE
(RESIDENTIAL)

SEPTEMBER 2019

STANDARD DRAWING NO. E 610-DRIV-03

ELIZABETH W. PHILLIPS
REGISTERED
No.
10200124
STATE OF
INDIANA
PROFESSIONAL ENGINEER

5/1/2019
DESIGN STANDARDS ENGINEER DATE

6/5/2019
CHIEF ENGINEER DATE

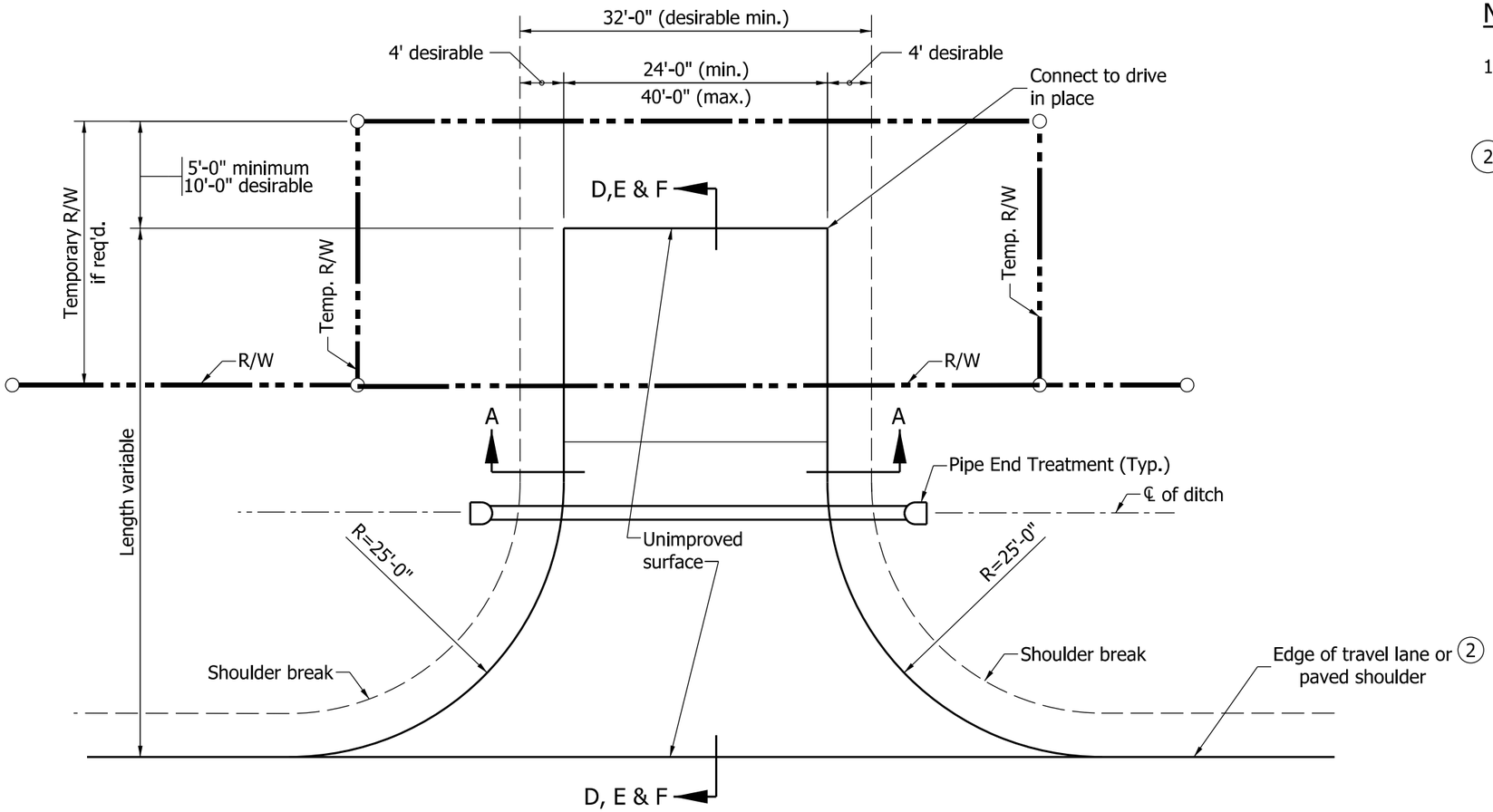

PLAN VIEW

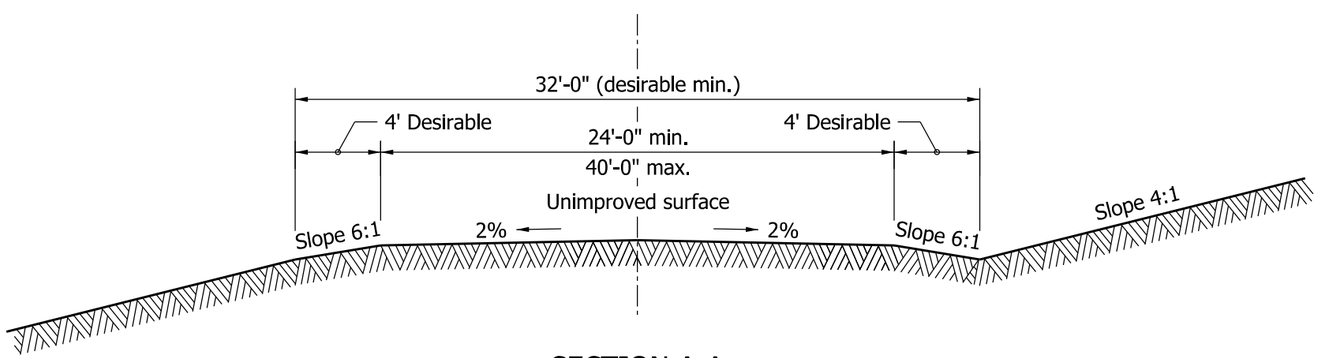

SECTION A-A

NOTES:

1. See Standard Drawing E 610-DRIV-11 for sections D-D, E-E, and F-F.

2. Where the shoulder is earth or aggregate or the paved width is less than 8'-0", the drive radii shall be tangent to the edge of the travel lane. Where the paved shoulder width is 8'-0" or more, the drive radii shall be tangent to the edge of the paved shoulder.

INDIANA DEPARTMENT OF TRANSPORTATION

CLASS V DRIVE
(FIELD ENTRANCE)

SEPTEMBER 2019

STANDARD DRAWING NO. E 610-DRIV-06

ELIZABETH W. PHILLIPS
REGISTERED
No. 10200124
STATE OF INDIANA
PROFESSIONAL ENGINEER

5/1/2019
DESIGN STANDARDS ENGINEER DATE

6/5/2019
CHIEF ENGINEER DATE

NOTES:

1. See Standard Drawing E 610-DRIV-03 for Class II Drive details.
2. See Standard Drawing E 610-DRIV-05 for Class IV Drive details.

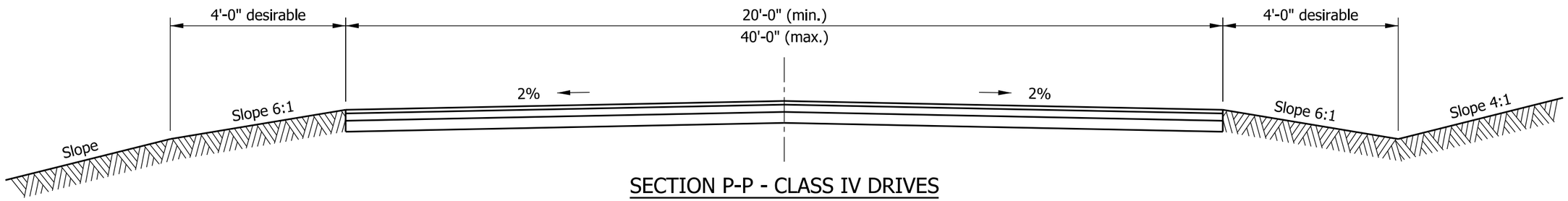

SECTION P-P - CLASS IV DRIVES

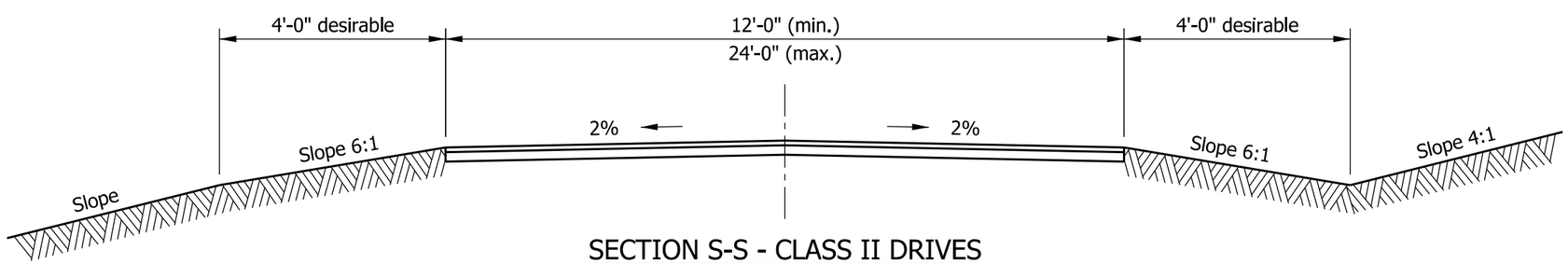

SECTION S-S - CLASS II DRIVES

INDIANA DEPARTMENT OF TRANSPORTATION

CLASS II AND CLASS IV DRIVE SECTIONS

SEPTEMBER 2019

STANDARD DRAWING NO. E 610-DRIV-10

ELIZABETH W. PHILLIPS
REGISTERED
No. 10200124
STATE OF INDIANA
PROFESSIONAL ENGINEER

5/1/2019
DESIGN STANDARDS ENGINEER DATE

6/5/2019
CHIEF ENGINEER DATE

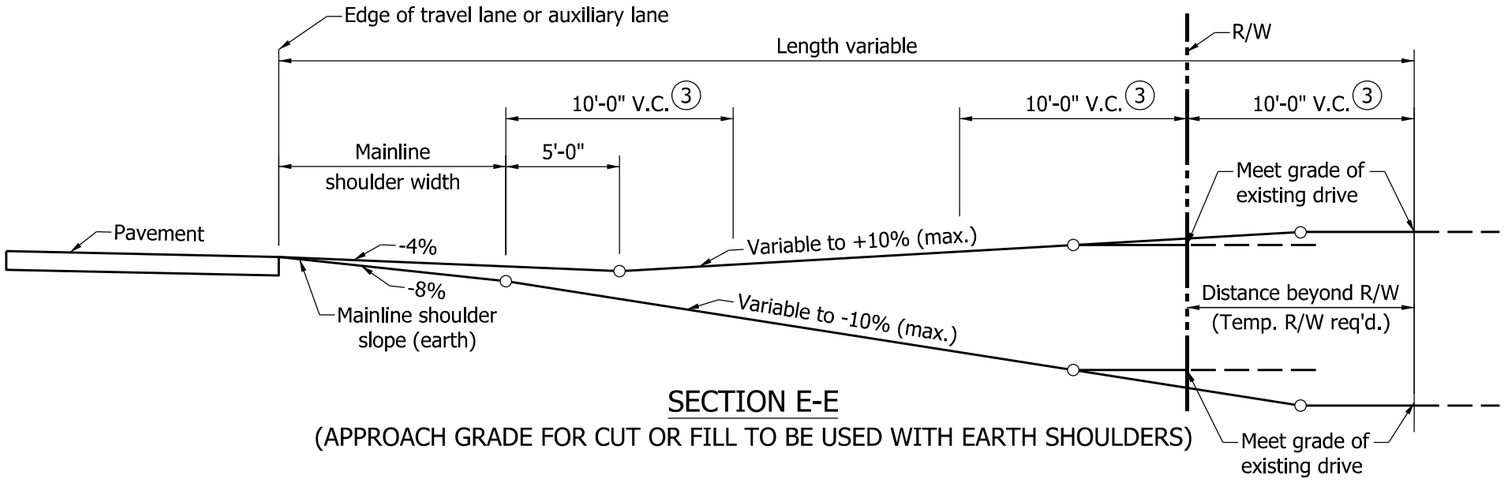

SECTION E-E

(APPROACH GRADE FOR CUT OR FILL TO BE USED WITH EARTH SHOULDERS)

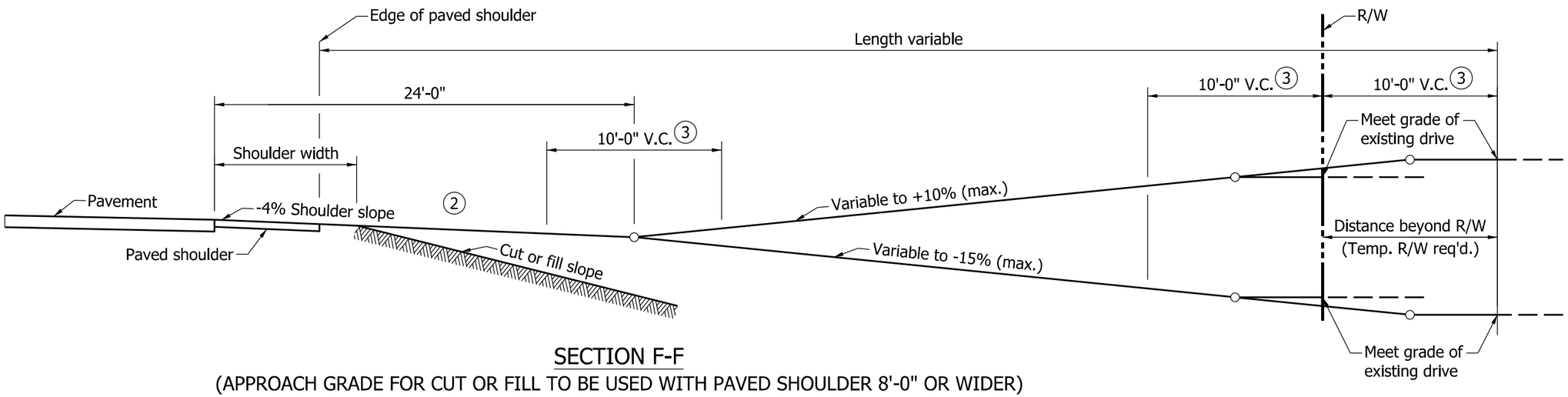

SECTION F-F

(APPROACH GRADE FOR CUT OR FILL TO BE USED WITH PAVED SHOULDER 8'-0" OR WIDER)

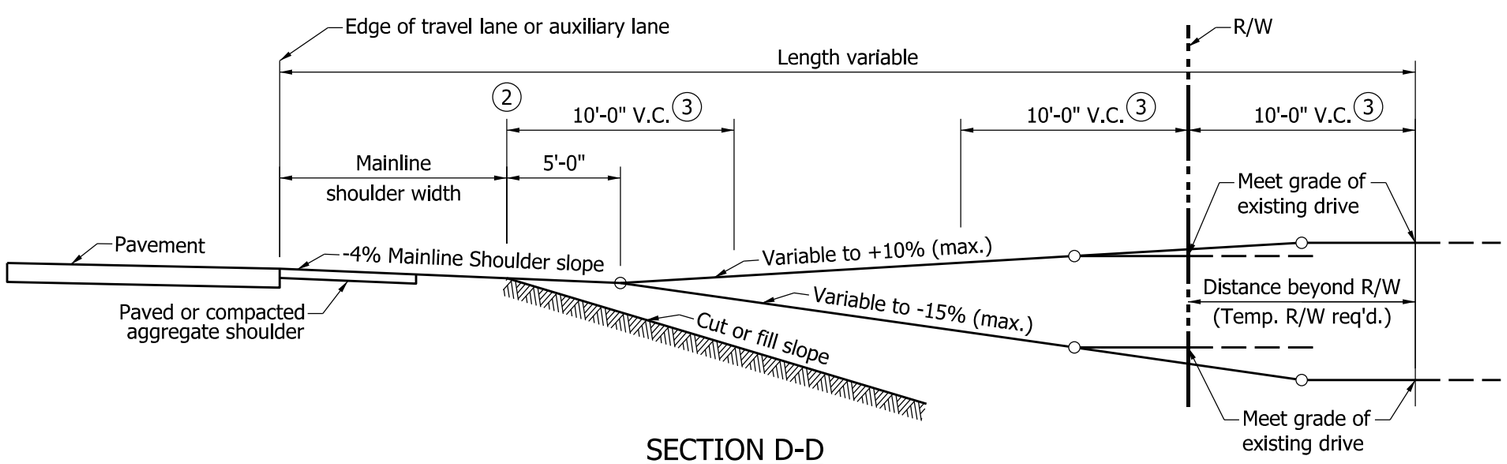

SECTION D-D

(APPROACH GRADE FOR CUT OR FILL TO BE USED WITH LESS THAN 8'-0" WIDTH PAVED OR COMPACTED AGGREGATE SHOULDERS)

NOTES:

1. See Standard Drawing E 610-DRIV-03, -05 and -06 for location of Sections D-D, E-E and F-F.

(2) Where physical restrictions limits the space available for the construction of a drive from a roadway in an embankment section, the downgrade breakpoint of the drive may begin at the edge of the shoulder without a crest vertical curve. The algebraic difference in grades shall not exceed 11%.

(3) The maximum algebraic difference shall not exceed 11% for crested grade and 14% for sagged grades.

INDIANA DEPARTMENT OF TRANSPORTATION

CLASS II, IV & V DRIVES
APPROACH GRADES

SEPTEMBER 2019

STANDARD DRAWING NO. E 610-DRIV-11

ELIZABETH W. PHILLIPS
REGISTERED
No. 10200124
STATE OF INDIANA
PROFESSIONAL ENGINEER

5/1/2019
DESIGN STANDARDS ENGINEER — DATE

6/5/2019
CHIEF ENGINEER — DATE

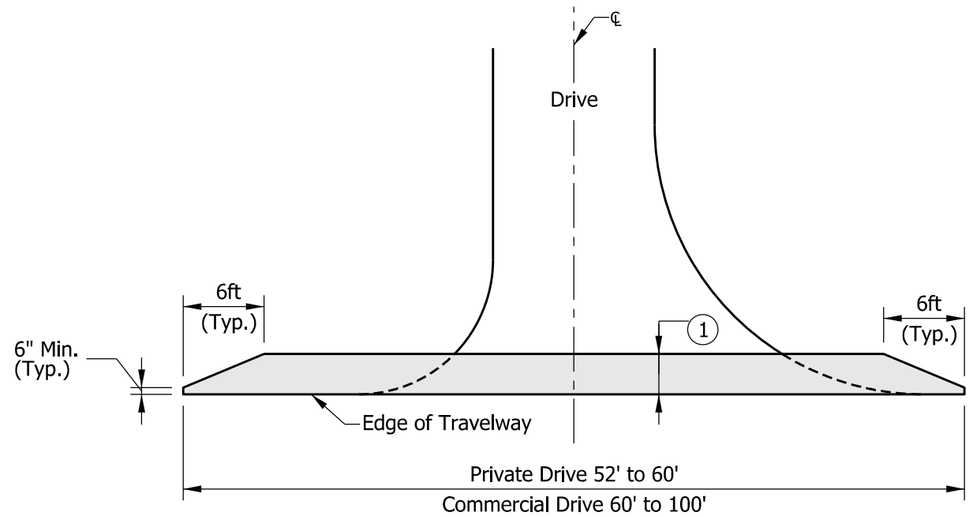

PAVEMENT WEDGE PLAN VIEW

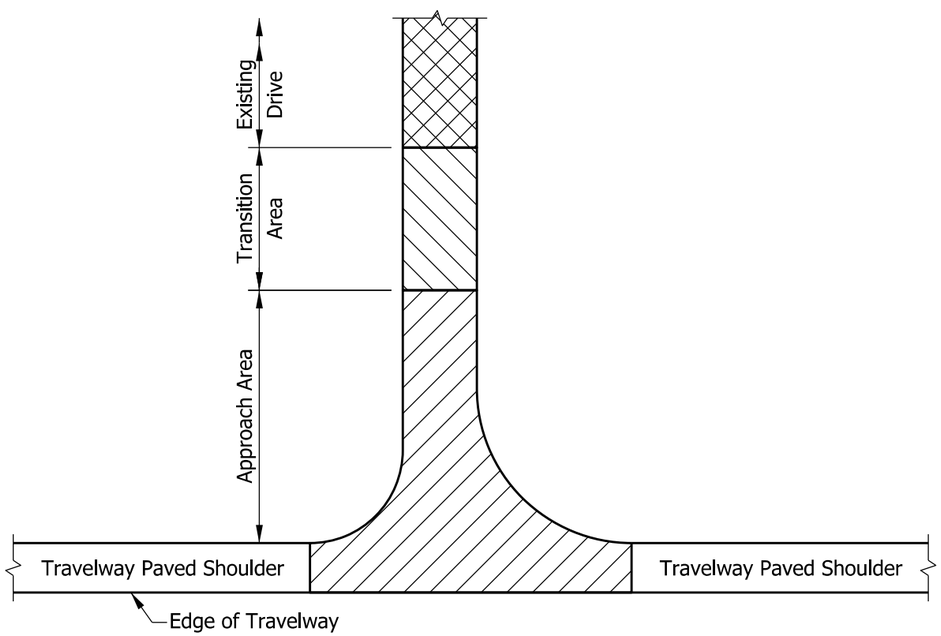

PAY LIMITS FOR CLASS II, IV, AND VI DRIVES

NOTES:

1. 3 ft or wider as necessary to feather to existing grade.
2. Pavement wedge to be centered on centerline of drive.
3. The pay limits shown herein generally apply to Class II, IV, and VI Drives.
4. Approach Area - HMA for Approaches or PCCP for Approaches. This area typically extends from the edge of an 8 foot or wider paved travelway shoulder to the right of way or property line or within a few feet of the right of way or property line where the new drive meets the grade of the existing drive, depending on the site-specific conditions. Where the travelway paved shoulder width is less than 8 feet, this area will be measured from the edge of travelway.
5. Transition Area - an equivalent pavement section to the existing drive. This area typically extends from the right of way or property line to a point on the property owner's drive where the new drive grade can match the existing drive grade.

LEGEND

Drive area to be treated with HMA for Approaches

INDIANA DEPARTMENT OF TRANSPORTATION

PAVEMENT WEDGE AND PAY LIMITS FOR CLASS II, IV, AND VI DRIVES

SEPTEMBER 2019

STANDARD DRAWING NO. E 610-DRIV-18

ELIZABETH W. PHILLIPS
REGISTERED
No. 10200124
STATE OF INDIANA
PROFESSIONAL ENGINEER

5/29/2019
DESIGN STANDARDS ENGINEER DATE

6/5/2019
CHIEF ENGINEER DATE

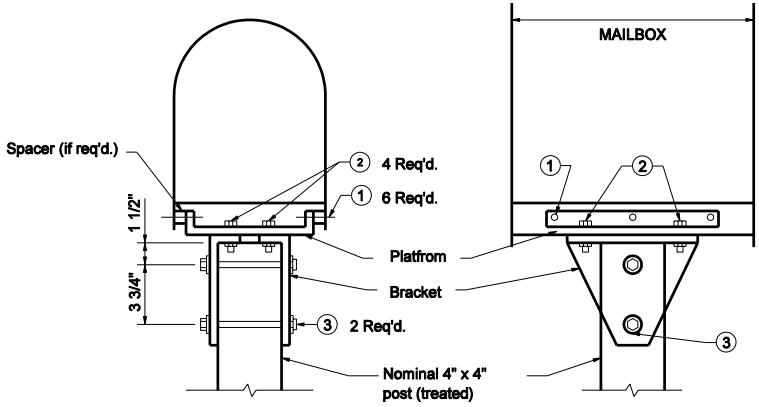

WITH WOOD POST

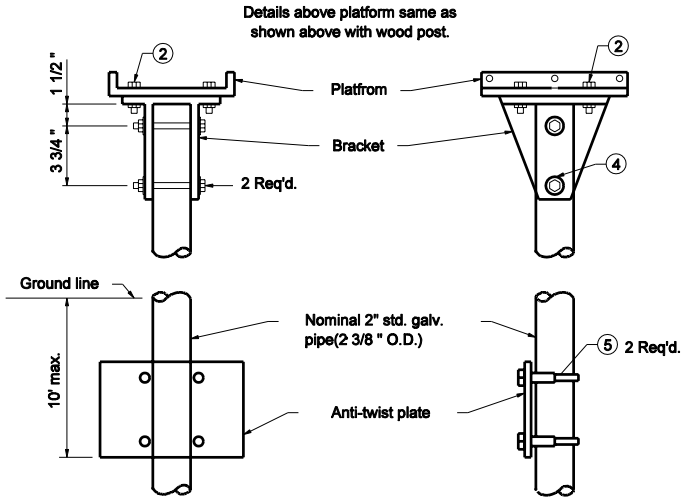

WITH PIPE POST

LEGEND

① #8-32 x "L" truss head machine screw with two #8 flat washers, #8 lock washers, and #8 hex nut.

② 5/16"-18 x 3/4" hex cap screw with two 5/16" flat washers, 5/16" lock washer and 5/16" hex nut.

③ 5/16"-18 x 4 1/2" hex cap screw with two 5/16" flat washers, 5/16" lock washer, and 5/16" hex nut.

④ 5/16"-18 x 3" hex cap screw with two 5/16" flat washers, 5/16" lock washer, and 5/16" hex nut.

⑤ Nominal 2 3/4" muffler clamp

⑥ For platfrom, bracket, shelf, spacer and anti-twist plate details, see Standard Drawing E 611-MBAS-03.

INDIANA DEPARTMENT OF TRANSPORTATION

SINGLE MAILBOX ASSEMBLY

MARCH 2005

STANDARD DRAWING NO. E 611-MBAS-01

RICHARD L. VanCLEAVE REGISTERED No. 9750 STATE OF INDIANA PROFESSIONAL ENGINEER

DESIGN STANDARDS ENGINEER

/s/ Richard L. VanCleave 3-01-05
DESIGN STANDARDS ENGINEER DATE

/s/ Richard K. Smutzer 3-01-05
CHIEF HIGHWAY ENGINEER DATE

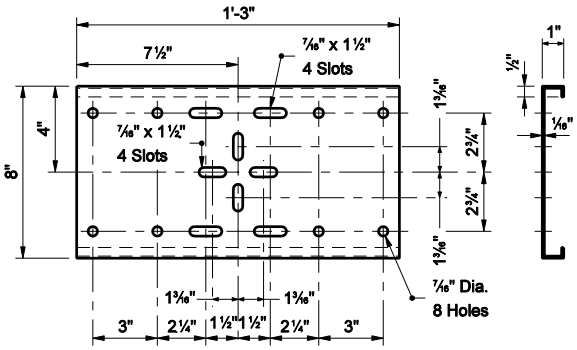

SHELF

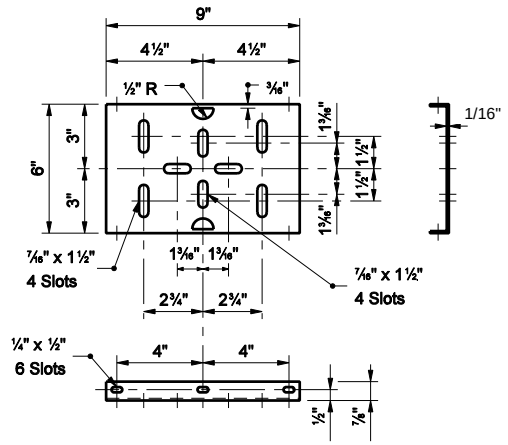

PLATFORM

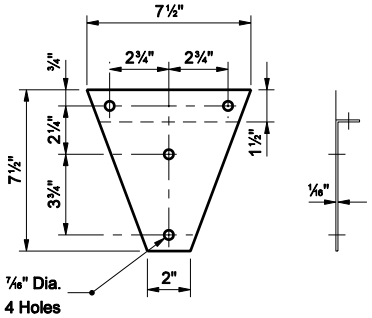

BRACKET

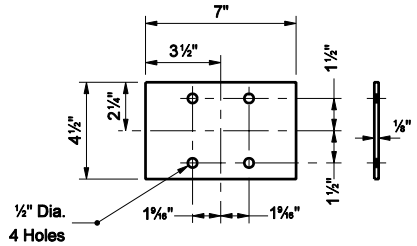

ANTI-TWIST PLATE

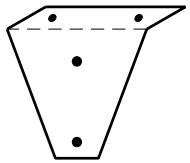

FINISHED BRACKET
ISOMETRIC

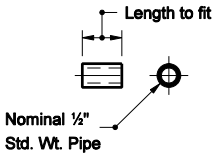

SPACER

INDIANA DEPARTMENT OF TRANSPORTATION

MAILBOX SUPPORT HARDWARE

MARCH 2005

STANDARD DRAWING NO. E 611-MBAS-03

RICHARD L. VanCLEAVE REGISTERED No. 9750 STATE OF INDIANA PROFESSIONAL ENGINEER

DESIGN STANDARDS ENGINEER

/s/ Richard L. VanCleave 3-01-05
DESIGN STANDARDS ENGINEER DATE

/s/ Richard K. Smutzer 3-01-05
CHIEF HIGHWAY ENGINEER DATE

GENERAL NOTES

(2) See plans for W

(5) The normal height range is 3'-3 to 3'-11. Contact the local postmaster to establish appropriate installation height.

(6) Established by the U.S. Postal Service, usually 3'-4 to 4'-0.

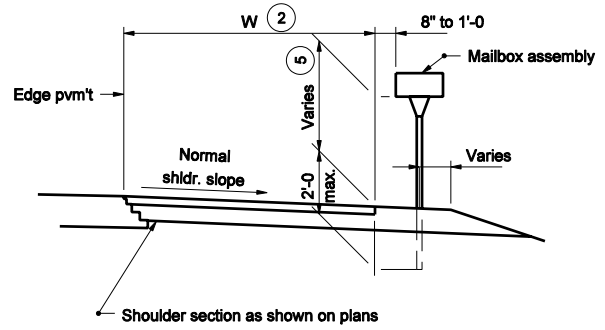

NORMAL SHOULDER SECTION

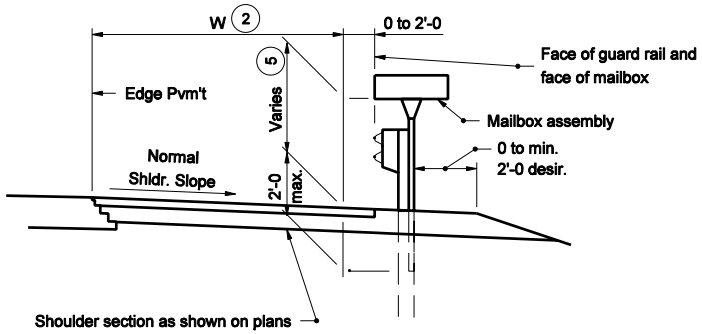

SHOULDER SECTION WITH GUARDRAIL

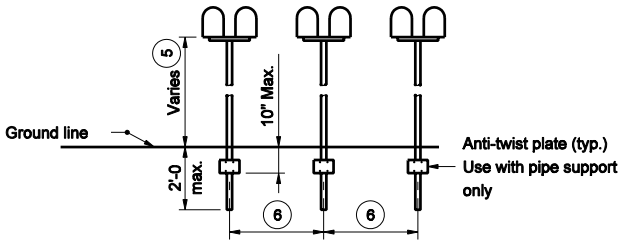

SPACING FOR MULTIPLE POST INSTALLATION

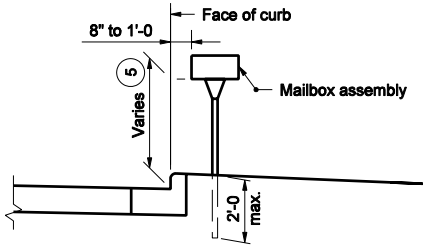

CURBED SECTION

INDIANA DEPARTMENT OF TRANSPORTATION

MAILBOX ASSEMBIES
ELEVATION VIEW

MARCH 2005

STANDARD DRAWING NO. E 611-MBAS-04

RICHARD L. VanCLEAVE REGISTERED No. 9750 STATE OF INDIANA PROFESSIONAL ENGINEER

DESIGN STANDARDS ENGINEER

/s/ Richard L. VanCleave 3-01-05
DESIGN STANDARDS ENGINEER DATE

/s/ Richard K. Smutzer 3-01-05
CHIEF HIGHWAY ENGINEER DATE

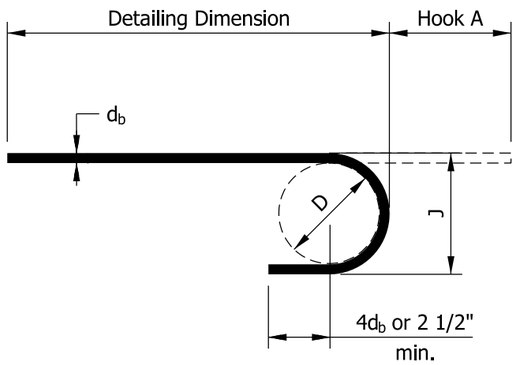

180° HOOK

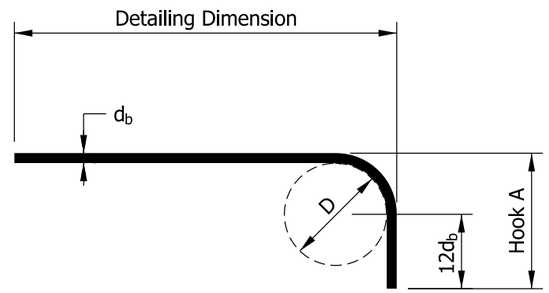

90° HOOK

STANDARD END HOOKS				
		180° HOOK		90° HOOK
BAR SIZE	D	HOOK A	J	HOOK A
#3	2 1/4"	5"	3"	6"
#4	3"	6"	4"	8"
#5	3 3/4"	7"	5"	10"
#6	4 1/2"	8"	6"	1'-0"
#7	5 1/4"	10"	7"	1'-2"
#8	6"	11"	8"	1'-4"
#9	9 1/2"	1'-3"	11 3/4"	1'-7"
#10	10 3/4"	1'-5"	1'-1 1/4"	1'-10"
#11	12"	1'-7"	1'-2 3/4"	2'-0"
#14	18 1/4"	2'-3"	1'-9 3/4"	2'-7"
#18	24"	3'-0"	2'-4 1/2"	3'-5"

NOTES:

1. All dimensions on reinforcing bar bending diagrams shall be measured out-to-out of bars.
2. All dimensions on reinforcing bar details shall be measured on centerlines of bars, except where cover or cl. is indicated.
3. Bent bars will be given a numeric bar mark, e.g., 588. The last two digits, e.g., 88, indicate the mark. The characters preceding the last two digits, e.g., 5, indicate the size of the bar.
4. Bent reinforcing bar marks on standard drawings will consist of the first digit as the bar size; the second digit, 7, indicating that it shall be placed in a bridge railing, or 8, indicating that it shall be placed in a bridge-railing transition, or 9, indicating that it shall be placed elsewhere; and the third and fourth digits as the serial number for that bar size.
5. Straight bars will be designated by size and length.
6. Standard size hooks shown shall be used on all hooked bars unless noted.
7. See the plans for lap and embedment lengths.
8. This drawing is consistent with the ACI 318 and CRSI *Manual of Standard Practice.*

ACI = American Concrete Institute
CRSI = Concrete Reinforcing Steel Institute

INDIANA DEPARTMENT OF TRANSPORTATION

BAR BENDING DETAILS

SEPTEMBER 2015

STANDARD DRAWING NO. E 703-BRST-01

ELIZABETH W. PHILLIPS
REGISTERED
No. 10200124
STATE OF INDIANA
PROFESSIONAL ENGINEER

/s/ Elizabeth W. Phillips 12/31/14
DESIGN STANDARDS ENGINEER DATE

/s/ Mark A. Miller 01/05/15
CHIEF ENGINEER DATE

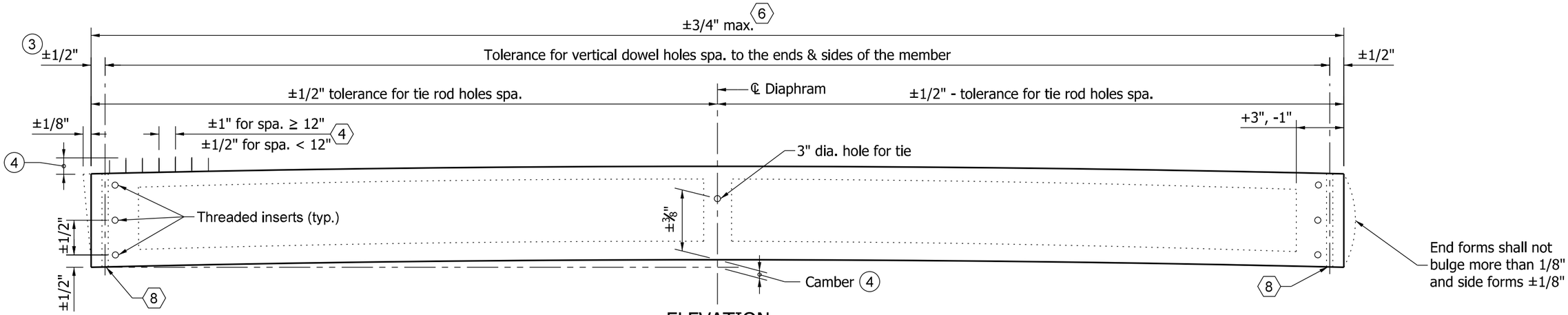

ELEVATION

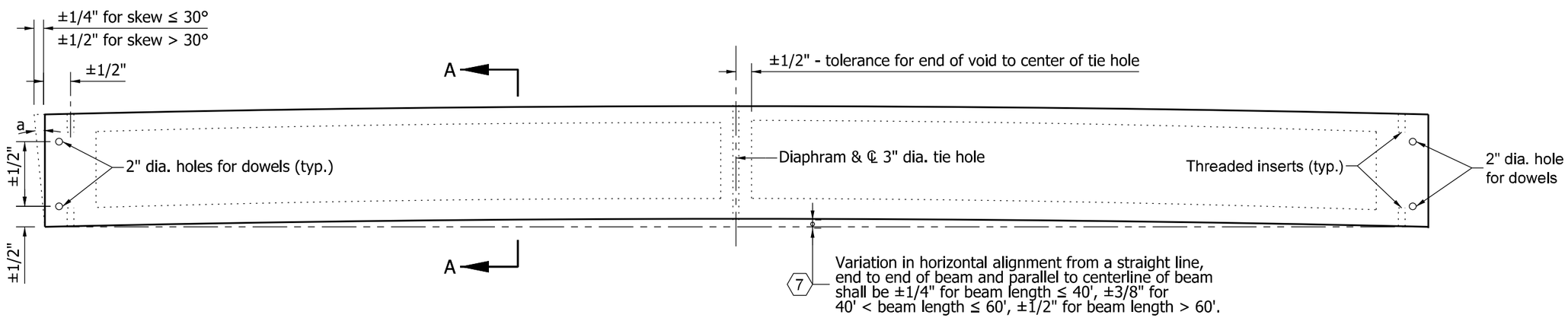

PLAN

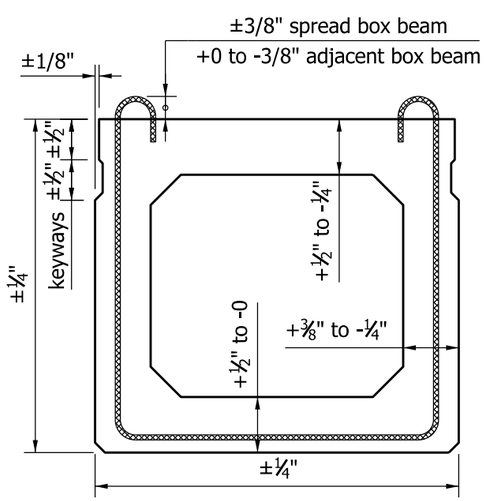

SECTION A-A

NOTES:

1. See Standard Drawing E 707-BPBF-04 for General Notes.
2. The top surface of the beam shall not vary more than 1/8" in 10' as measured from a straightedge.

(3) Tolerance of beam ends for deviation from a true vertical with respect to top and bottom surfaces.

(4) Projection above top of spread box beam shall be ±3/8". Projection above top of adjacent box beam +0 to -3/8".

INDIANA DEPARTMENT OF TRANSPORTATION

FABRICATION TOLERANCES
PRESTRESSED BOX BEAM

SEPTEMBER 2012

STANDARD DRAWING NO. E 707-BPBF-01

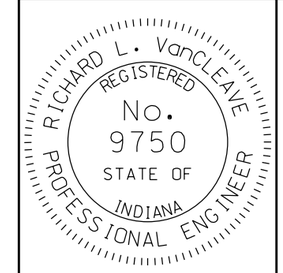

/s/ Richard L. VanCleave 09/04/12
SUPERVISOR, ROADWAY STANDARDS DATE

/s/ Mark A. Miller 09/04/12
CHIEF ENGINEER DATE

GENERAL NOTES :

1. Tolerances shown are maximum permissible varations from the dimensions shown on the plans or shop drawings. Tolerances shall not be considered cumulative. Longitudinal tolerances are based on design length. Casting length shall be adjusted to compensate for shrinkage and plastic flow.

2. End stirrup bars shall not be more than 2" from the end of the beam.

3. Mild reinforcing steel concrete cover tolerance shall be 1/8" to +3/8".

4. Tolerances for reinforcing bars for composite beam.

5. Variation of camber shall not be more than 1" on one span nor more than 1/2" between adjacent members to be measured at time of erection.

   Permitted camber variation from design camber is as follows:

I-beam or bulb-tee beam:	±1/8" per 10'-0" length with ±1/2" maximum for member length of 80'-0" or less
	±1" maximum for member length of greater than 80'-0"
Box beam:	±1/8" per 10'-0" length with ±1/2" mm maximum

6. Tolerance in length of beam shall be checked after the final curing phase and within three days prior to shipping.

7. Horizontal-alignment tolerance shall be checked immediately after removal of forms and strand release, and prior to removal from bed.

8. At concrete bearing area, deviation from plane surface when tested in all directions of the plane surface with a steel straightedge shall not be more than ±1/16".

INDIANA DEPARTMENT OF TRANSPORTATION

FABRICATION TOLERANCES
GENERAL NOTES

SEPTEMBER 2011

STANDARD DRAWING NO. E 707-BPBF-04

RICHARD L. VanCLEAVE
REGISTERED
No. 9750
STATE OF INDIANA
PROFESSIONAL ENGINEER

DESIGN STANDARDS ENGINEER

/s/ Richard L.VanCleave 09/01/11
DESIGN STANDARDS ENGINEER DATE

/s/ Mark A. Miller 09/01/11
CHIEF HIGHWAY ENGINEER DATE

PIPE DIA.	END SECTION THICK. (in.)	DIMENSIONS					APPROX. SLOPE	BODY
		A (±1")	B (Max.)	H (±1")	L (±1½")	W (±2")		
12	.064	6	6	6	21	24	2½:1	1 Pc.
15	.064	7	8	6	26	30	2½:1	1 Pc.
18	.064	8	10	6	31	36	2½:1	1 Pc.
21	.064	9	12	6	36	42	2½:1	1 Pc.
24	.064	10	13	6	41	48	2½:1	1 Pc.
30	.079	12	16	8	51	60	2½:1	1 Pc.
36	.079	14	19	9	60	72	2½:1	2 Pc.

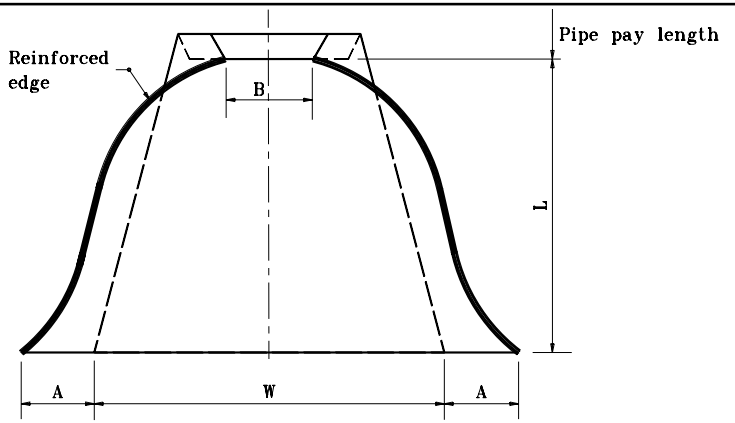

PLAN VIEW

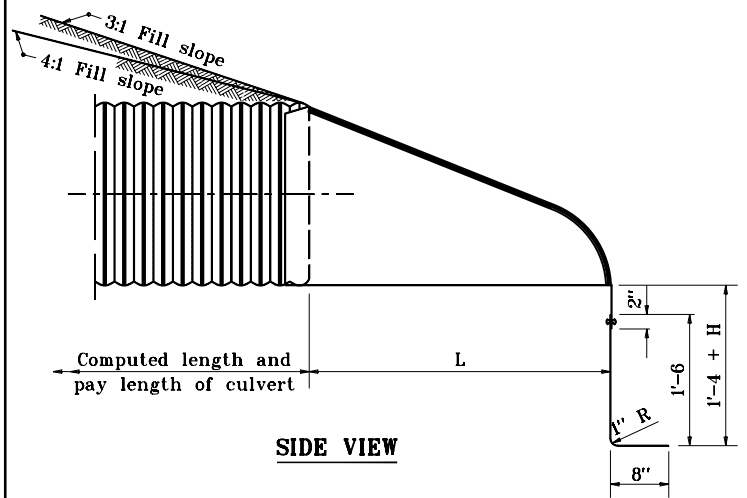

SIDE VIEW

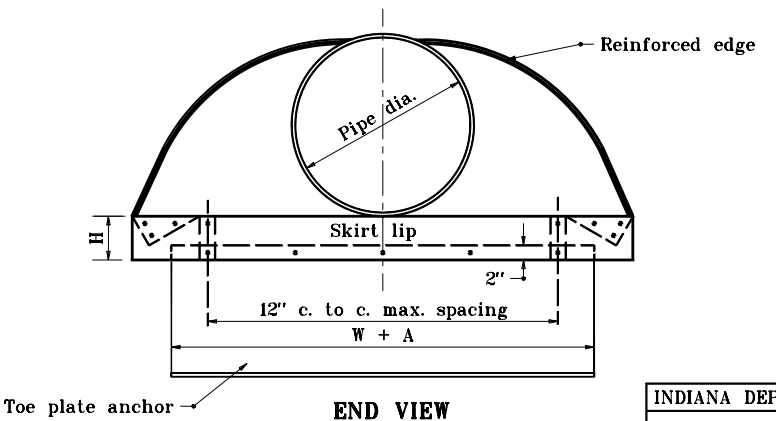

END VIEW

INDIANA DEPARTMENT OF TRANSPORTATION

METAL PIPE END SECTION

JANUARY 1998

STANDARD DRAWING NO. E 715-MPES-01

ANTHONY L. UREMOVICH REGISTERED No. 18095 STATE OF INDIANA PROFESSIONAL ENGINEER

DESIGN STANDARDS ENGINEER

DETAILS PLACED IN THIS FORMAT 11-15-99

/s/ Anthony L. Uremovich 11-15-99
DESIGN STANDARDS ENGINEER DATE

/s/ Firooz Zandi 11-15-99
CHIEF HIGHWAY ENGINEER DATE

ORIGINALLY APPROVED 1-02-98

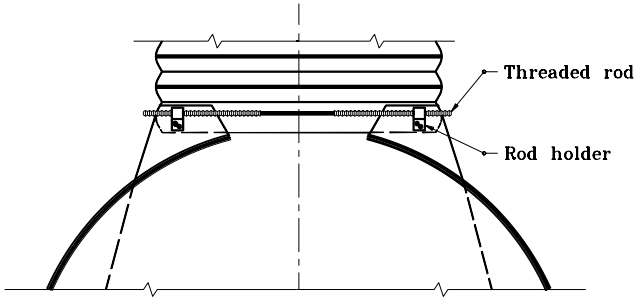

TYPE 1
FOR 17" x 13" THROUGH 42" x 29" ONLY

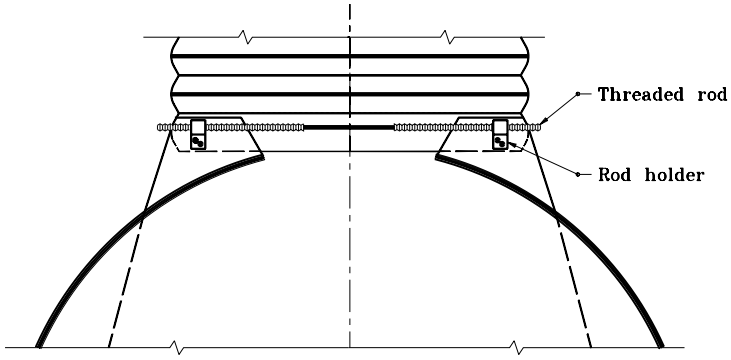

TYPE 4
FOR 30" THROUGH 36" ONLY

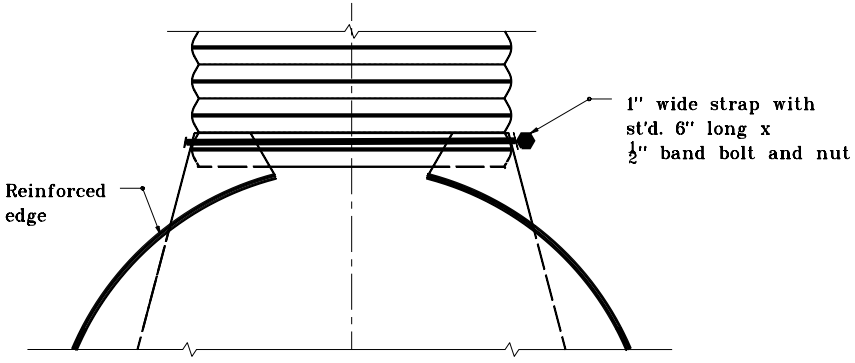

ALTERNATE TYPE 3
FOR 12" THROUGH 24" ONLY

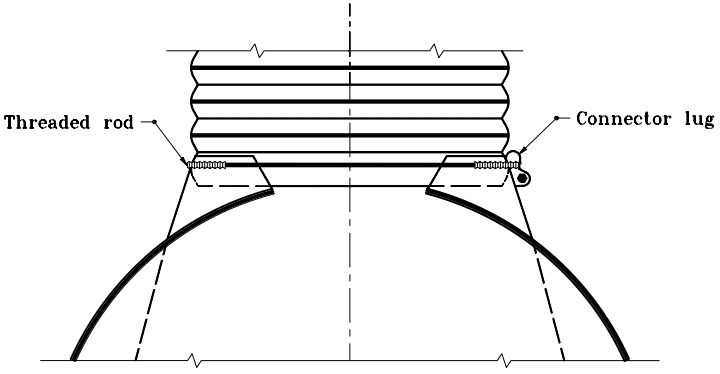

TYPE 3
FOR 12" THROUGH 24" ONLY

INDIANA DEPARTMENT OF TRANSPORTATION

METAL PIPE
END SECTION CONNECTIONS
JANUARY 1998

STANDARD DRAWING NO. **E 715-MPES-03**

ANTHONY L. UREMOVICH REGISTERED No. 18095 STATE OF INDIANA PROFESSIONAL ENGINEER

DESIGN STANDARDS ENGINEER

DETAILS PLACED IN THIS FORMAT 7-27-99

/s/ Anthony L. Uremovich 7-27-99
DESIGN STANDARDS ENGINEER DATE

/s/ Firooz Zandi 7-27-99
CHIEF HIGHWAY ENGINEER DATE

ORIGINALLY APPROVED 1-02-98

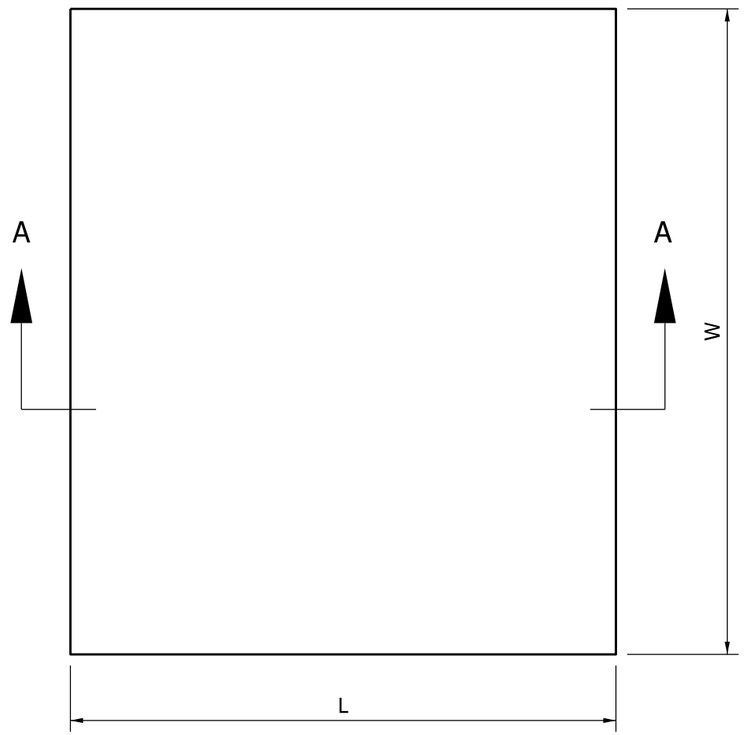

ELASTOMERIC BEARING PAD
PLAN

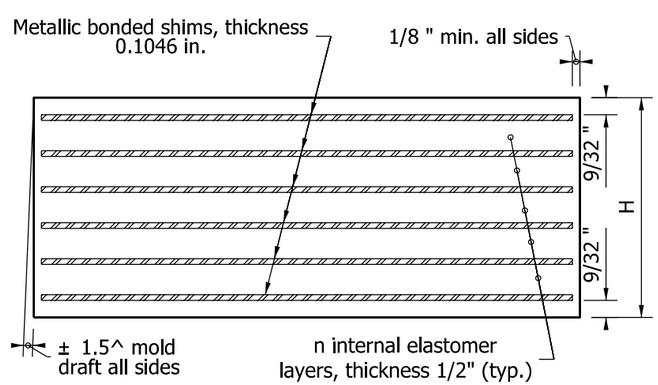

SECTION A - A

NOTES:

1. The rectangular Elastomeric Bearing Pad shall be placed with L dimension parallel to longitudinal bridge axis.

2. h_{rt} is defined as the summation of all internal elastomer thickness plus the two external layers thickness.

TABLE OF DIMENSIONS

Bearing Designation	Bearing Width W	Bearing Length L	Number of Internal Elastomer Layers n	h_{rt}	Number of Steel Shims n_s	Bearing Total Thickness H
TYPE 1	14"	10 1/2"	3	2 1/16"	4	2 15/32"
TYPE 2	14"	11 1/2"	4	2 9/16"	5	3 3/32"
TYPE 3	18"	11"	4	2 9/16"	5	3 3/32"
TYPE 4	24"	12"	5	3 1/16"	6	3 11/16"
TYPE 5A	22"	11"	4	2 9/16"	5	3 3/32"
TYPE 6A	22"	10"	4	2 9/16"	5	3 3/32"
TYPE 7A	22"	9"	3	2 1/16"	4	2 15/32"
TYPE 5B	12"	12"	4	2 9/16"	5	3 3/32"
TYPE 6B	12"	11"	4	2 9/16"	5	3 3/32"
TYPE 7B	12"	10"	3	2 1/16"	4	2 15/32"

INDIANA DEPARTMENT OF TRANSPORTATION

BRIDGE ELASTOMERIC BEARING PADS
TYPE 1 to 7
FOR PRESTRESSED I-BEAMS & BOX BEAMS
SEPTEMBER 2009

STANDARD DRAWING NO. E 726-BEBP-01

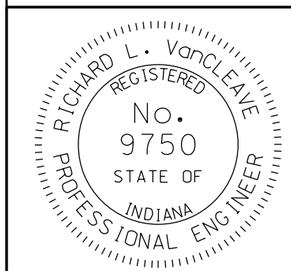

DESIGN STANDARDS ENGINEER

/s/ Richard L.VanCleave 09/01/09
DESIGN STANDARDS ENGINEER DATE

/s/ Mark A. Miller 09/01/09
CHIEF HIGHWAY ENGINEER DATE

NOTES:

1. For detour route marker assemblies (A),(B),(C) and (D) see Standard Drawing E 801-TCDT-04.
2. See Standard Drawing E 801-TCLG-01 for standard notes and legend.

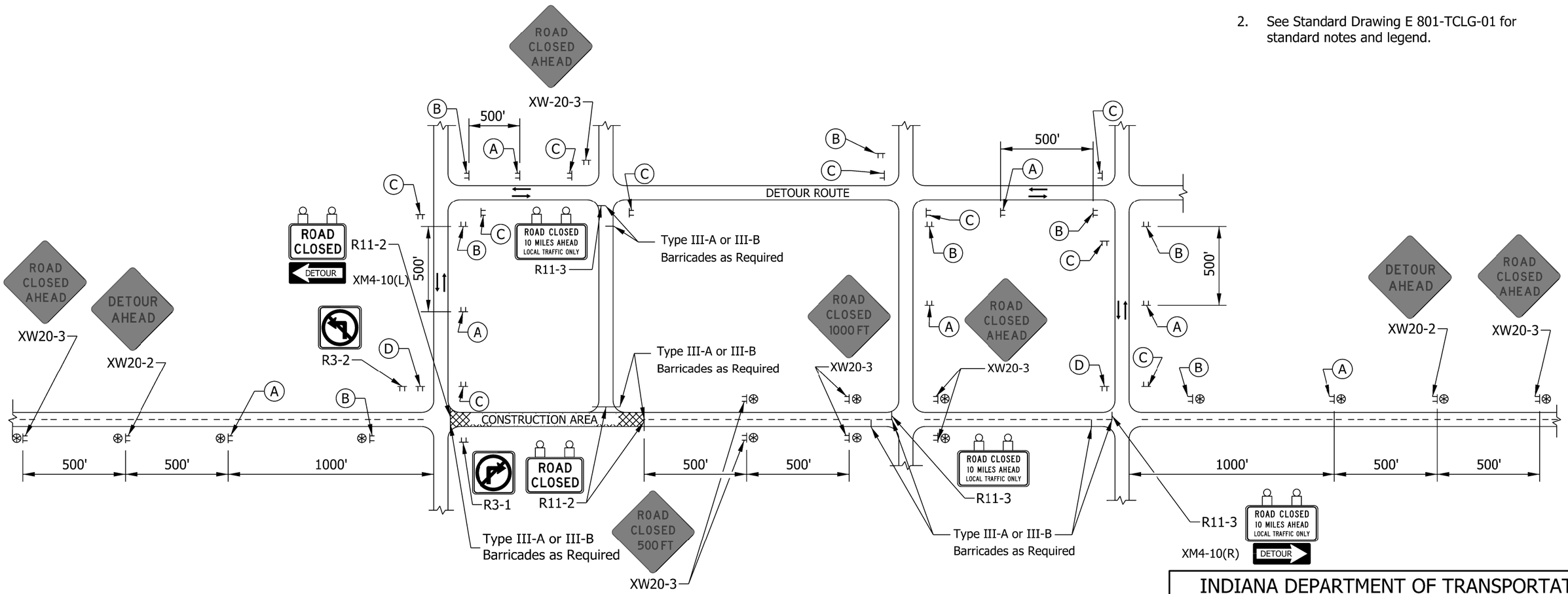

TYPICAL APPLICATIONS OF TRAFFIC CONTROL DEVICES FOR A RURAL DETOUR

INDIANA DEPARTMENT OF TRANSPORTATION

RURAL DETOUR

SEPTEMBER 2017

STANDARD DRAWING NO. E 801-TCDT-01

DAVID H. BORUFF REGISTERED No. 60900348 STATE OF INDIANA PROFESSIONAL ENGINEER

/s/ David H. Boruff 04/24/17
DESIGN STANDARDS ENGINEER DATE

/s/ John Leckie 04/25/17
CHIEF ENGINEER DATE

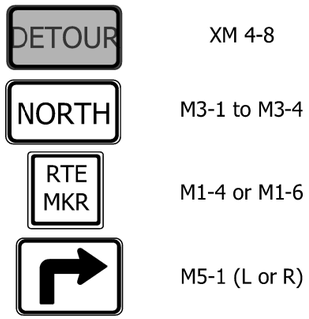

Ⓐ ADVANCE TURN DETOUR ROUTE MARKER ASSEMBLY ①

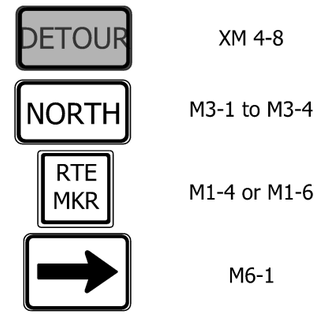

Ⓑ DIRECTIONAL DETOUR ROUTE MARKER ASSEMBLY ②

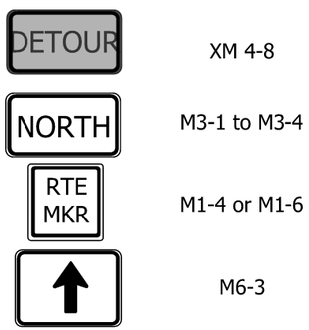

Ⓒ CONFIRMING DETOUR ROUTE MARKER ASSEMBLY ③

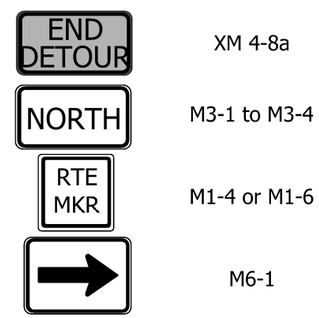

Ⓓ END DETOUR ROUTE MARKER ASSEMBLY ④

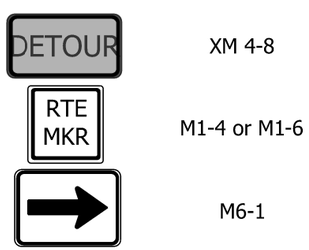

Ⓔ BI-DIRECTIONAL DETOUR ROUTE MARKER ASSEMBLY

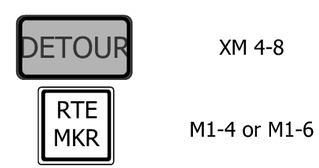

Ⓕ BI-DIRECTIONAL CONFIRMING DETOUR ROUTE MARKER ASSEMBLY

STATE HIGHWAY / NUMBERED LOCAL HIGHWAY

NOTES:

1. Advance turn detour route marker assemblies shall be located as shown, or after the last cross street prior to the beginning of the detour, as directed.
2. Directional detour route marker assemblies shall be located 100 ft. to 200 ft. in advance of all required turns within the detour limits.
3. Confirming detour route marker assemblies shall be located 200 ft. past all major intersections, as required, and shall be spaced a maximum of 3 mi. on a rural detour or 0.5 mi. on an urban detour on each leg of such detours. Confirming detour route marker assemblies shall be placed after a required turn when directed.
4. End detour route marker assemblies shall be located 100 ft. to 200 ft. in advance of the final turn of the detour.

INDIANA DEPARTMENT OF TRANSPORTATION

DETOUR ROUTE MARKER ASSEMBLIES

SEPTEMBER 2017

STANDARD DRAWING NO. E 801-TCDT-04

DAVID H. BORUFF REGISTERED No. 60900348 STATE OF INDIANA PROFESSIONAL ENGINEER

/s/ David H. Boruff 04/24/17
DESIGN STANDARDS ENGINEER DATE

/s/ John Leckie 04/25/17
CHIEF ENGINEER DATE

NOTES:

1. Barricade lights, signs, and supports shall meet NCHRP 350 or MASH crash evaluation criteria.
2. The Detour Arrow sign shall be used only when a detour route has been signed.
3. The sign assembly must be above the Type III barricade.

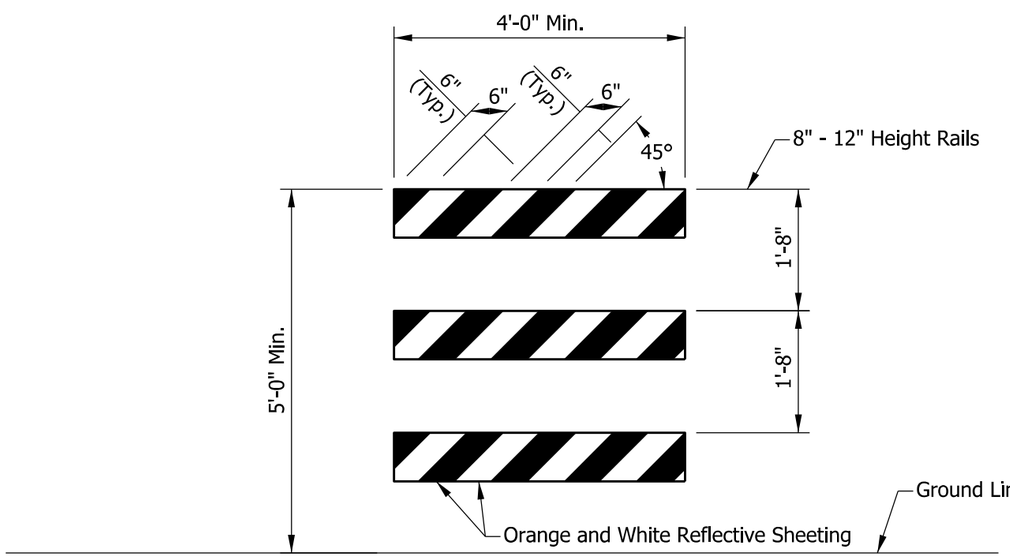

TYPE III BARRICADE

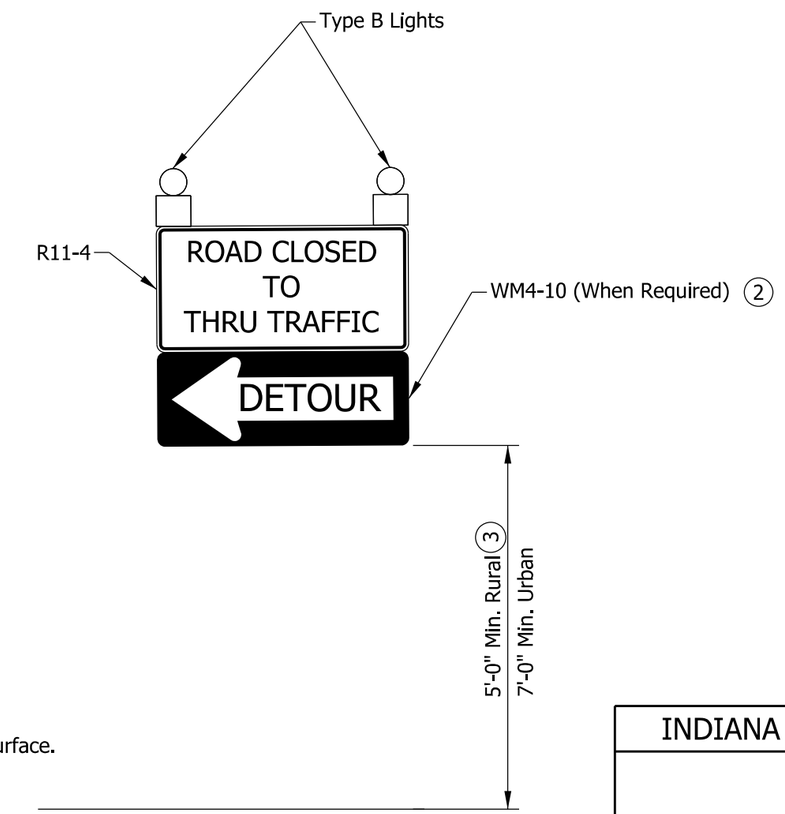

ROAD CLOSURE SIGN ASSEMBLY

INDIANA DEPARTMENT OF TRANSPORTATION

TYPE III BARRICADE

SEPTEMBER 2016

STANDARD DRAWING NO. E 801-TCDV-04

DAVID H. BORUFF REGISTERED No. 60900348 STATE OF INDIANA PROFESSIONAL ENGINEER

/s/ David H. Boruff 06/25/15
DESIGN STANDARDS ENGINEER DATE

/s/ Mark A. Miller 07/02/15
CHIEF ENGINEER DATE

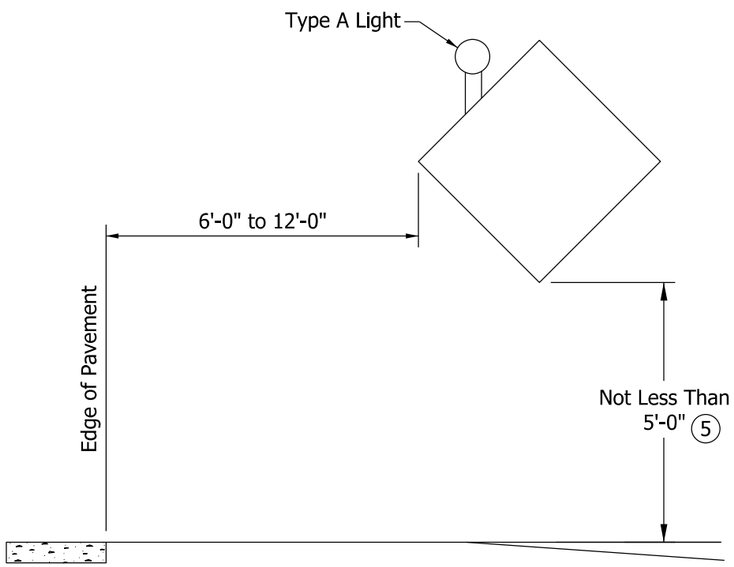

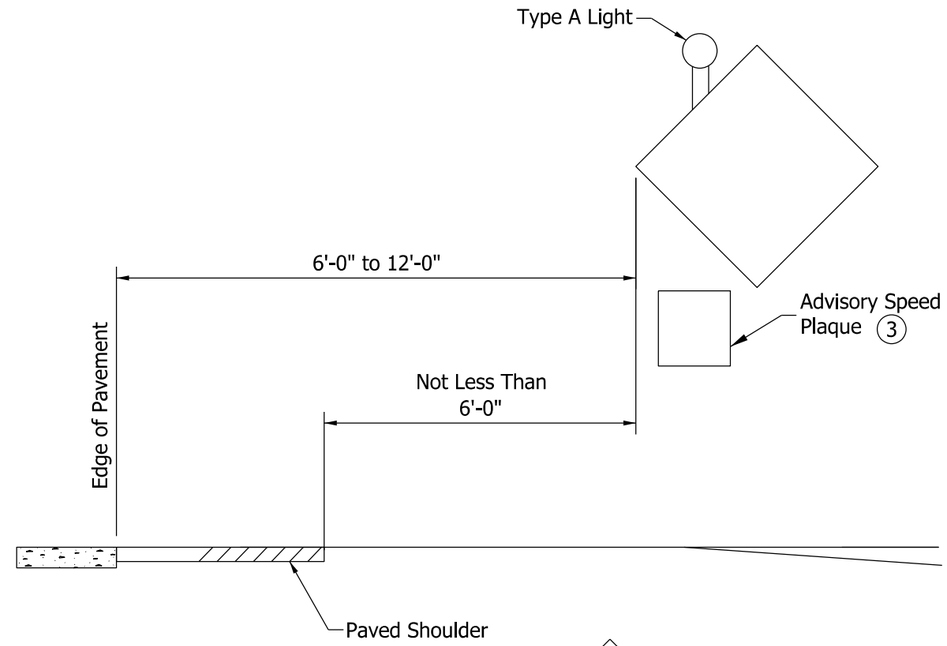

UN-CURBED ROADWAY

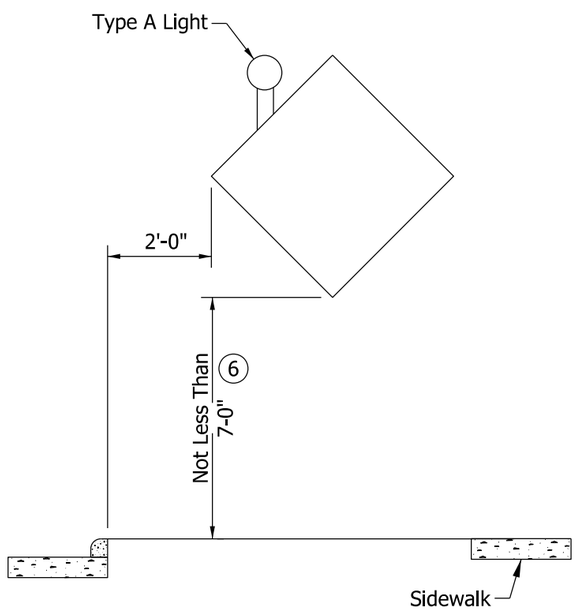

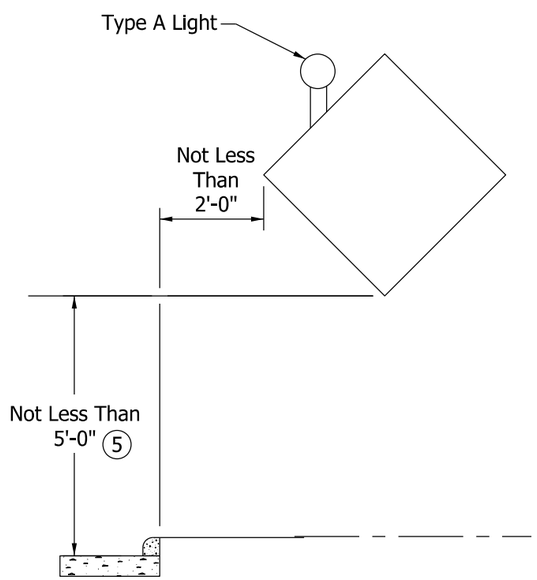

CURBED ROADWAY

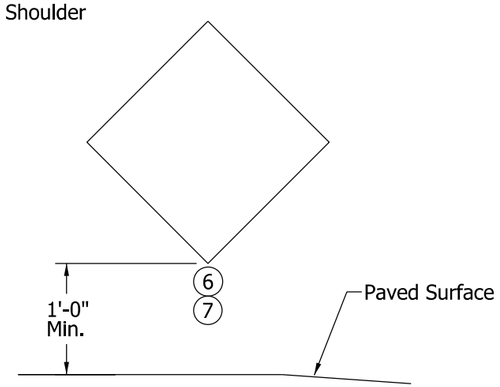

TEMPORARY MOUNTED
CONSTRUCTION SIGN

NOTES:

1. See Standard Drawing E 801-TCSN-07 for additional notes.
2. Signs, lights, and supports shall satisfy NCHRP 350 or MASH crash evaluation criteria.

(3) An advisory speed plaque, required to be placed with another construction sign, may be mounted on the post closest to the roadway at a height not less than 4 ft above the edge of pavement adjacent to the sign. The bottom of the construction warning sign shall not be lower than the top of the advisory speed plaque.

4. Type A warning light required on all construction signs.

(5) In urban area or on Interstate route, mounting height shall not be less than 7 ft.

(6) When signs are placed on sidewalk, a 4 ft useable width must be maintained. No part of the sign or support that is less than 7 ft in height may protrude more than 4 in. into the 4 ft useable sidewalk width.

(7) Temporary mounted construction sign for nighttime work or for operations which affect traffic lanes shall be mounting height of 5 ft above the traveled way. On roadways where on-street parking is allowed, temporary mounted construction signs shall have a minimum sign mounting height of 7 ft above the traveled way.

INDIANA DEPARTMENT OF TRANSPORTATION

TYPICAL CONSTRUCTION
SIGN MOUNTING

SEPTEMBER 2016

STANDARD DRAWING NO. E 801-TCDV-05

DAVID H. BORUFF
REGISTERED
No.
60900348
STATE OF
INDIANA
PROFESSIONAL ENGINEER

/s/ David H. Boruff 06/25/15
DESIGN STANDARDS ENGINEER DATE

/s/ Mark A. Miller 07/02/15
CHIEF ENGINEER DATE

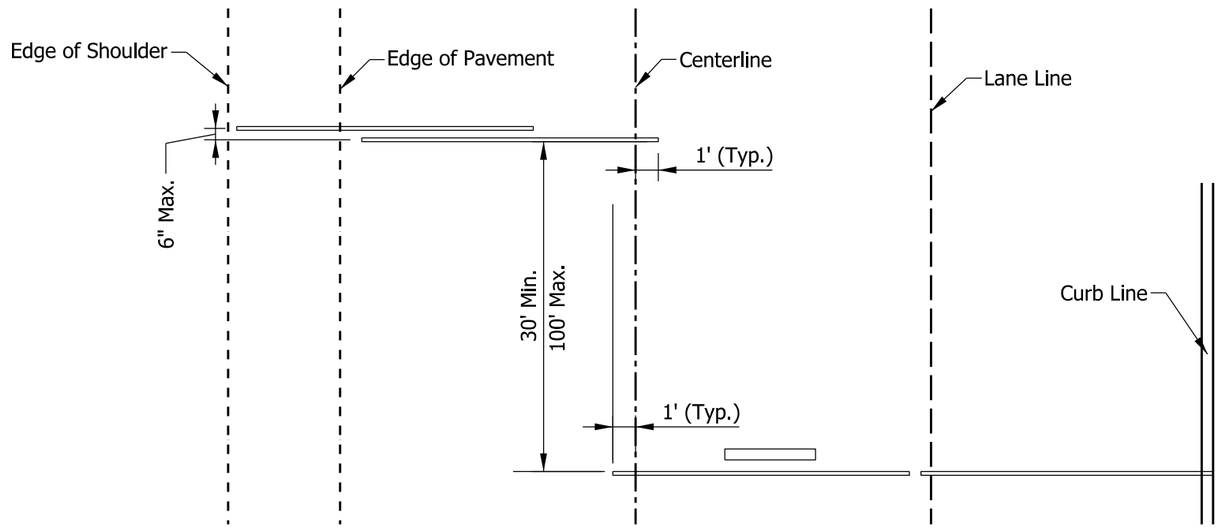

PLAN VIEW

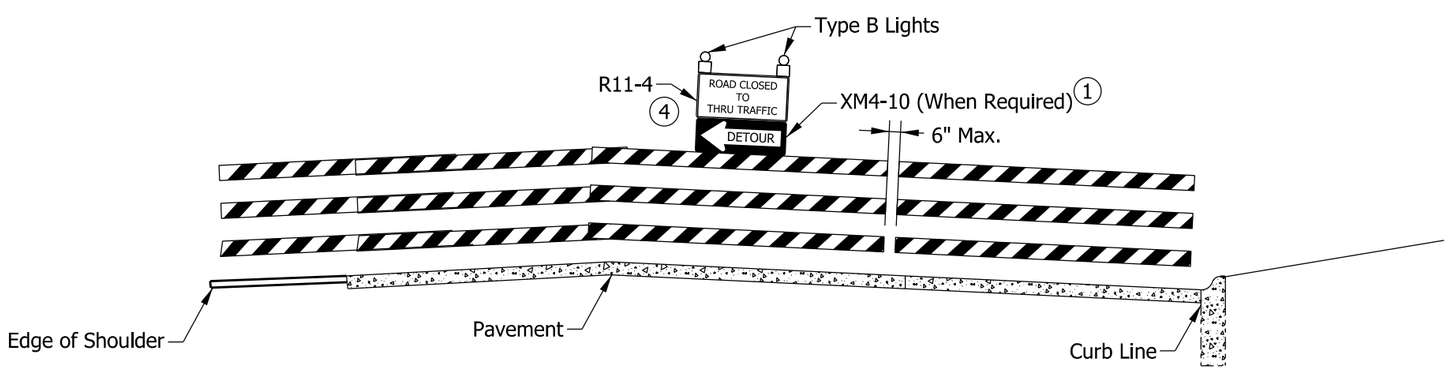

ELEVATION

TYPICAL APPLICATIONS OF TYPE III BARRICADES
"ROAD CLOSED TO THRU TRAFFIC"

NOTES:

1. The Detour Arrow sign shall be used only when a detour route has been signed.
2. See Standard Drawing E 801-TCDV-04 for sign use and mounting information.
3. Barricades and supports shall meet NCHRP 350 or MASH crash evaluation criteria.
4. The R11-3a ("ROAD CLOSED/LOCAL TRAFFIC ONLY") or R11-3b ("BRIDGE CLOSED/LOCAL TRAFFIC ONLY") sign may be substituted for the R11-4 signs as directed on the plans or by the engineer.

INDIANA DEPARTMENT OF TRANSPORTATION

TYPE III BARRICADE APPLICATION FOR
ROAD CLOSURE FOR THRU TRAFFIC

SEPTEMBER 2016

STANDARD DRAWING NO. E 801-TCDV-06

DAVID H. BORUFF
REGISTERED
No.
60900348
STATE OF
INDIANA
PROFESSIONAL ENGINEER

/s/ David H. Boruff	06/25/15
DESIGN STANDARDS ENGINEER	DATE
/s/ Mark A. Miller	07/02/15
CHIEF ENGINEER	DATE

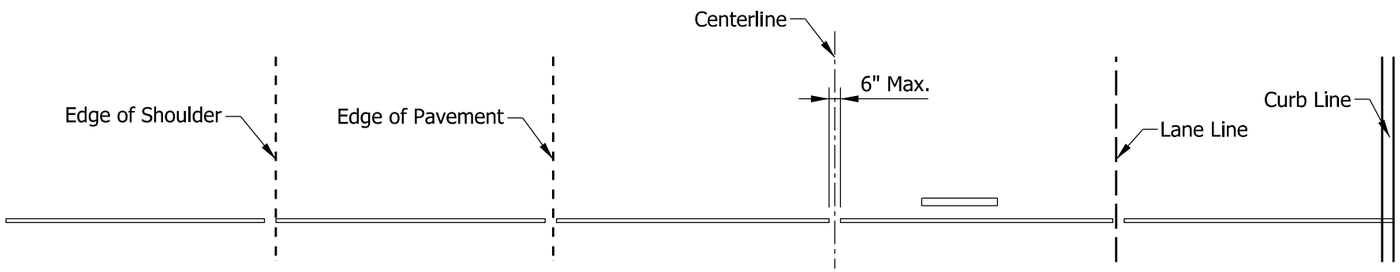

(HALF PLAN WITH SHOULDER SECTION)

(HALF PLAN WITH CURB SECTION)

PLAN VIEW

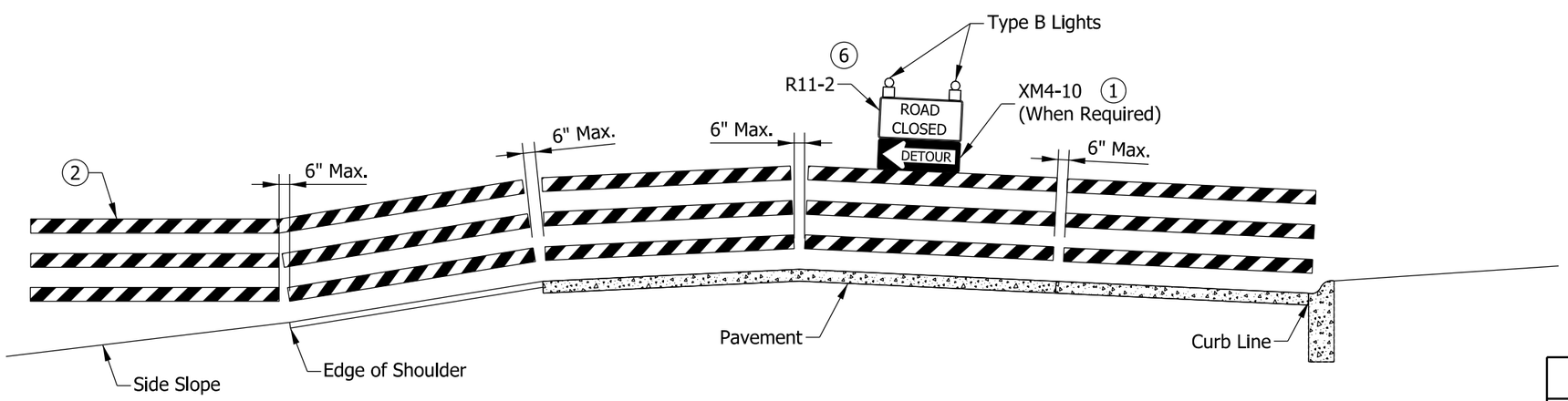

(HALF ELEVATION WITH SHOULDER SECTION)

(HALF ELEVATION WITH CURB SECTION)

ELEVATION

TYPICAL APPLICATIONS OF TYPE III BARRICADES
ROAD CLOSED TO ALL TRAFFIC

NOTES:

1. The Detour Arrow sign shall be used only when a detour route has been signed.

2. Barricades shall be supported on driven posts in areas outside of the pavement or sidewalk, where side slopes are 3 to 1 or flatter.

3. See Standard Drawing 801-TCDV-04 for sign use and mounting information.

4. Barricades and supports shall meet NCHRP 350 or MASH crash evaluation criteria.

5. See Note 5 on Standard Drawing 801-TCSN-07 for post depth.

6. The Legend of the R11-2 may be modified to "BRIDGE CLOSED" as indicated on the plans or directed by the engineer.

INDIANA DEPARTMENT OF TRANSPORTATION

TYPE III BARRICADE APPLICATION
FOR ROAD CLOSURE TO ALL TRAFFIC

SEPTEMBER 2016

STANDARD DRAWING NO. E 801-TCDV-07

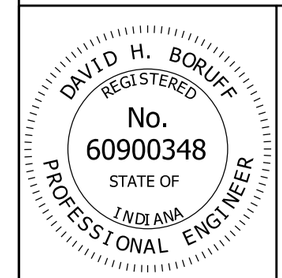

/s/ David H. Boruff 06/25/15
DESIGN STANDARDS ENGINEER DATE

/s/ Mark A. Miller 07/02/15
CHIEF ENGINEER DATE

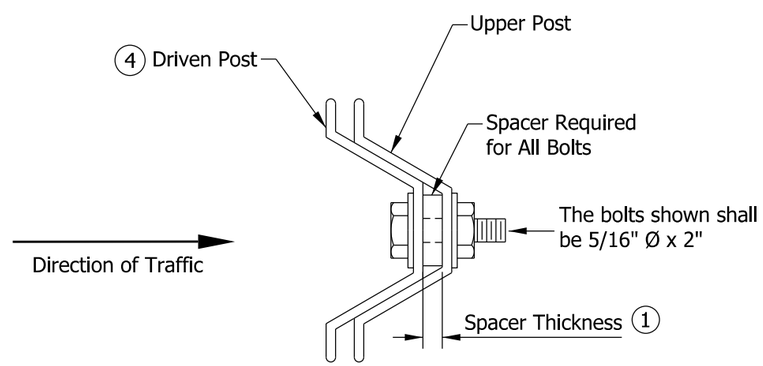

SECTION "A-A"

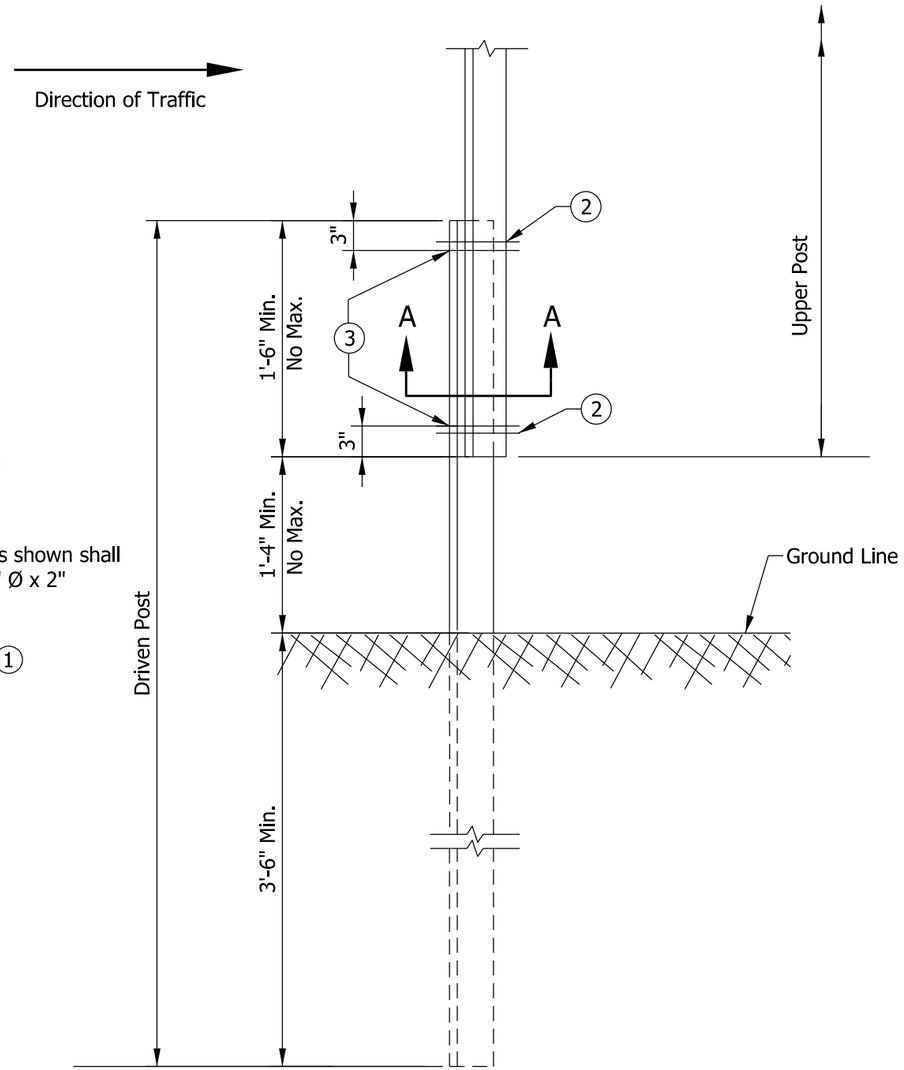

ELEVATION

U CHANNEL STEEL POST SPLICE

NOTES:

1. The spacer thickness shall be 1/16 in. less than the gap between the posts when positioned in the unbolted configuration.
2. The exterior bolt, spacer, washer, and nut shall be installed in a prepunched hole within the first 2 in. of the end of the lapped post section.
3. The interior bolt, spacer, washer, and nut shall be installed in a prepunched hole within the first 2 in. of the exterior bolts. The maximum spacing between the interior bolts shall be 1'-6". If the length of the post lap is increased such that this 1'-6" maximum is exceeded, then additional interior bolts shall be installed such that the maximum space between adjacent interior bolts does not exceed the 1'-6" limit.
4. The driven post shall be mounted in front of the upper post with respect to adjacent oncoming traffic, regardless of the direction the sign is facing.

INDIANA DEPARTMENT OF TRANSPORTATION

U CHANNEL STEEL
POST SPLICE DETAIL

SEPTEMBER 2016

STANDARD DRAWING NO. E 801-TCDV-08

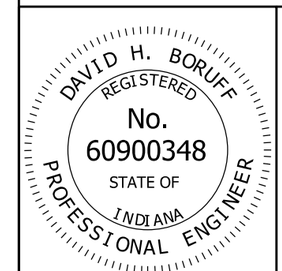

/s/ David H. Boruff 06/25/15
DESIGN STANDARDS ENGINEER DATE

/s/ Mark A. Miller 07/02/15
CHIEF ENGINEER DATE

INDEX

SHEET NO.	SUBJECT
1	Index
2	Traffic Control Signs
3	Traffic Control Signs
4	Traffic Control Sign Design Details
5	Traffic Control Sign Design Details
6	Traffic Control Sign Design Details
7	Temporary Panel Sign Breakaway Post Installation
8	Wood Post Design For Temporary Panel Signs

GENERAL NOTES:

1. The minimum vertical and horizontal clearances for construction signs shall be as shown on Standard Drawing E 801-TCDV-05.
2. The minimum horizontal clearance for construction signs on curbed roadway sections shall be 2'-0" from the face of the curb to the near edge of the sign.
3. The minimum depth for wood or steel posts shall be 4 ft.
4. See Standard Drawing E 801-TCDV-08 for U-Channel Steel Post Splice Detail.

INDIANA DEPARTMENT OF TRANSPORTATION

TRAFFIC CONTROL SIGNS
INDEX SHEET

SEPTEMBER 2016

STANDARD DRAWING NO. E 801-TCSN-01

DAVID H. BORUFF
REGISTERED
No.
60900348
STATE OF
INDIANA
PROFESSIONAL ENGINEER

/s/ David H. Boruff 02/25/16
DESIGN STANDARDS ENGINEER DATE

/s/ Mark A. Miller 02/25/16
CHIEF ENGINEER DATE

③

XW20-1
XW20-1-A

② ③

XW21-8a
XW21-8a-A

② ④

XW21-8b
XW21-8b-A

④

XW20-1a

XW2-6a
XW2-6a-A
XW2-6a-B

XW2-6b
XW2-6b-A
XW2-6b-B

XW103-1

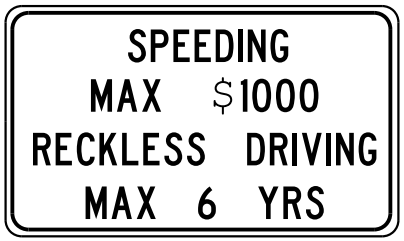

XW2-6
XW2-6-A

XG20-2

XW3-4S

NOTES:

1. See Standard Drawing E 801-TCSN-01 for general notes.

② Sign Shall be removed, covered or turned to face away from the roadway during non-working hours.

③ Sign may be ordered to read "500 FT", "1000 FT", or "1500 FT" in place of the word "AHEAD". Such Signs may be used in place of or in conjunction with the indicated sign.

④ Shaded text Indicates message content that must be varied to reflect site conditions.

INDIANA DEPARTMENT OF TRANSPORTATION

TRAFFIC CONTROL SIGNS

SEPTEMBER 2016

STANDARD DRAWING NO. E 801-TCSN-02

DAVID H. BORUFF
REGISTERED
No.
60900348
STATE OF
INDIANA
PROFESSIONAL ENGINEER

/s/ David H. Boruff 03/24/16
DESIGN STANDARDS ENGINEER DATE

/s/ Mark A. Miller 03/24/16
CHIEF HIGHWAY ENGINEER DATE

NOTES:

1. See Standard Drawing E 801-TCSN-01 for general notes.

(2) Shaded text indicates message content that must be varied to reflect site conditions.

XW105-1-A

XW20-YWR(A)

XW20-YWR(B)

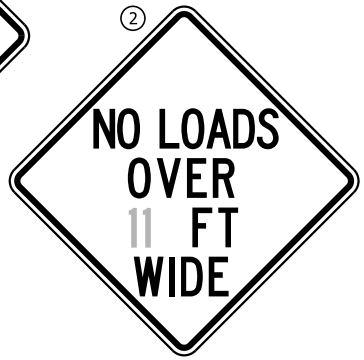

XW20-YWL(C)

XW109-1

XW106-2-A

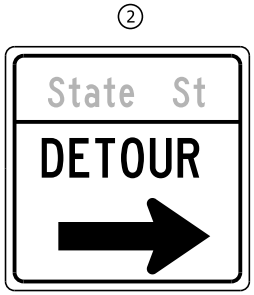

XM4-9d

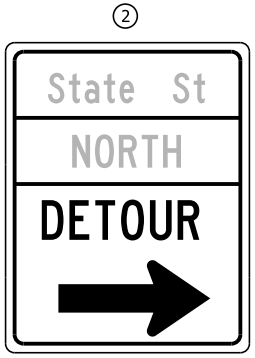

XM4-9e

XW106-1-A

INDIANA DEPARTMENT OF TRANSPORTATION	
TRAFFIC CONTROL SIGNS SEPTEMBER 2016	
STANDARD DRAWING NO. E 801-TCSN-03	
DAVID H. BORUFF REGISTERED No. 60900348 STATE OF INDIANA PROFESSIONAL ENGINEER	/s/ David H. Boruff 03/24/16 DESIGN STANDARDS ENGINEER DATE /s/ Mark A. Miller 03/24/16 CHIEF HIGHWAY ENGINEER DATE

SIGN NUMBER	IMUTCD CODE	SIGN MESSAGE	POST DESIGN		SIGN SIZE	SIGN COLOR		BORDER WIDTH	MARGIN WIDTH	LETTER HEIGHT SERIES - LINE 1	LETTER HEIGHT SERIES - LINE 2	LETTER HEIGHT SERIES - LINE 3	WORD OR LINE (1)	PCT. (1)	CORNER RADIUS	NO. OF POSTS	
			4 X 4 WOOD	STEEL		BACKGROUND	COPY									1	2
R2-1	R2-1	Speed Limit ___	*	A	24 X 30	White	Black	See FHWA publication Standard Highway Signs for fabrication details								X	
R2-1-B	R2-1	Speed Limit ___	*	B	48 X 60	White	Black	See FHWA publication Standard Highway Signs for fabrication details									X
R3-2-A (R or L)	R3-2	(Movement Prohibition)	*	A	30 X 30	White	Black	See FHWA publication Standard Highway Signs for fabrication details								X	
R3-2-C (R or L)	R3-2	(Movement Prohibition)	*	B	48 X 48	White	Black	See FHWA publication Standard Highway Signs for fabrication details									X
R4-1	R4-1	Do Not Pass	*	A	24 X 30	White	Black	See FHWA publication Standard Highway Signs for fabrication details								X	
R4-1-B	R4-1	Do Not Pass	*	B	48 X 60	White	Black	See FHWA publication Standard Highway Signs for fabrication details									X
R5-1-A	R5-1	Do Not Enter	*	A	36 X 36	Red	White	See FHWA publication Standard Highway Signs for fabrication details									X
R5-1-B	R5-1	Do Not Enter	*	B	48 X 48	Red	White	See FHWA publication Standard Highway Signs for fabrication details									X
R6-1 (R or L)	R6-1	One Way (Inside White Arrow)	*	A	36 X 12	White	Black	See FHWA publication Standard Highway Signs for fabrication details								X	
R6-2-A (R or L)	R6-2	One Way (Above White Arrow)	*	A	24 X 30	Black & White	Black	See FHWA publication Standard Highway Signs for fabrication details								X	
R11-2	R11-2	Road Closed	*	B	48 X 30	White	Black	See FHWA publication Standard Highway Signs for fabrication details									X
R11-3	R11-3	Road Closed - Local Traffic Only	*	B	60 X 30	White	Black	See FHWA publication Standard Highway Signs for fabrication details									X
R11-4	R11-4	Road Closed to Thru Traffic	*	B	60 X 30	White	Black	See FHWA publication Standard Highway Signs for fabrication details									X
R12-1	R12-1	Weight Limit ___ Tons	*	A	24 X 30	White	Black	See FHWA publication Standard Highway Signs for fabrication details								X	
R12-1-A	R12-1	Weight Limit ___ Tons	-	B	36 X 48	White	Black	See FHWA publication Standard Highway Signs for fabrication details									X
S4-4	S4-4	When Flashing Plaque	*	-	48 X 20	White	Black	See FHWA publication Standard Highway Signs for fabrication details								-	-
XW1-1-A (R or L)	W1-1	(Turn Symbol)	*	A	36 X 36	Orange	Black	See FHWA publication Standard Highway Signs for fabrication details									X
XW1-1-B (R or L)	W1-1	(Turn Symbol)	*	B	48 X 48	Orange	Black	See FHWA publication Standard Highway Signs for fabrication details									X
XW1-2-A (R or L)	W1-2	(Curve Symbol)	*	A	36 X 36	Orange	Black	See FHWA publication Standard Highway Signs for fabrication details									X
XW1-2-B (R or L)	W1-2	(Curve Symbol)	*	B	48 X 48	Orange	Black	See FHWA publication Standard Highway Signs for fabrication details									X
XW1-3-A (R or L)	W1-3	(Reverse Turn Symbol)	*	A	36 X 36	Orange	Black	See FHWA publication Standard Highway Signs for fabrication details									X
XW1-3-B (R or L)	W1-3	(Reverse Turn Symbol)	*	B	48 X 48	Orange	Black	See FHWA publication Standard Highway Signs for fabrication details									X
XW1-4-A (R or L)	W1-4	(Reverse Curve Symbol)	*	A	36 X 36	Orange	Black	See FHWA publication Standard Highway Signs for fabrication details									X
XW1-4-B (R or L)	W1-4	(Reverse Curve Symbol)	*	B	48 X 48	Orange	Black	See FHWA publication Standard Highway Signs for fabrication details									X
XW1-6	W1-6	(Single Headed Arrow)	*	B	48 X 24	Orange	Black	See FHWA publication Standard Highway Signs for fabrication details									X
XW1-6-A	W1-6	(Single Headed Arrow)	*	B	60 X 30	Orange	Black	See FHWA publication Standard Highway Signs for fabrication details									X
XW2-6	XW2-6	Worksite Added Penalty	*	B	60 X 36	Orange	Black	7/8	5/8	5 - Series C	5 - Series C	5 - Series C	5 - Series C		2 1/4		X
XW2-6-A	XW2-6	Worksite Added Penalty	*	B	78 X 42	Orange	Black	7/8	5/8	6 - Series D	6 - Series D	6 - Series D	6 - Series D		2 1/4		X
XW2-6a	XW2-6a	Speeding Max $1000	*	A	30 X 30	Orange	Black	3/4	1/2	4 - Series C	4 - Series C				1 7/8	X	
XW2-6a-A	XW2-6a	Speeding Max $1000	*	A	36 X 36	Orange	Black	7/8	5/8	5 - Series C	5 - Series C				2 1/4		X
XW2-6a-B	XW2-6a	Speeding Max $1000	*	B	48 X 48	Orange	Black	1 1/4	3/4	6 - Series D	6 - Series D				3		X
XW2-6b	XW2-6b	Reckless Driving Max 6 Yrs	*	A	30 X 30	Orange	Black	3/4	1/2	4 - Series C	4 - Series C				1 7/8	X	
XW2-6b-A	XW2-6b	Reckless Driving Max 6 Yrs	*	A	36 X 36	Orange	Black	7/8	5/8	5 - Series C	5 - Series C				2 1/4		X
XW2-6b-B	XW2-6b	Reckless Driving Max 6 Yrs	*	B	48 X 48	Orange	Black	1 1/4	3/4	6 - Series D	6 - Series D				3		X

*Wood post permitted.

NOTES:

(1) Spacing between letters of this word or line shall be reduced by this percentage as shown in the FHWA document, *Standard Highway Signs.*

2. See Standard Drawing E 801-TCSN-01 for additional general notes.

3. All dimensions are in inches.

INDIANA DEPARTMENT OF TRANSPORTATION

TRAFFIC CONTROL SIGN DESIGN DETAILS

SEPTEMBER 2016

STANDARD DRAWING NO. E 801-TCSN-04

DAVID H. BORUFF REGISTERED No. 60900348 STATE OF INDIANA PROFESSIONAL ENGINEER

/s/ David H. Boruff 03/24/16
DESIGN STANDARDS ENGINEER DATE

/s/ Mark A. Miller 03/24/16
CHIEF ENGINEER DATE

SIGN NUMBER	IMUTCD CODE	SIGN MESSAGE	POST DESIGN		SIGN SIZE	SIGN COLOR		BORDER WIDTH	MARGIN WIDTH	LETTER HEIGHT SERIES - LINE 1	LETTER HEIGHT SERIES - LINE 2	LETTER HEIGHT SERIES - LINE 3	WORD OR LINE (1)	PCT. (1)	CORNER RADIUS	NO. OF POSTS	
			4 X 4 WOOD	STEEL		BACKGROUND	COPY									1	2
XW3-4S	-	Overhead Sign Installation	*	B	60 x 24	Orange	Black	1/2	3/8	6 - Series C	6 - Series C				1 1/2		X
XW3-5-A	W3-5	(Reduced Speed Limit Ahead)	*	A	36 X 36	Orange	Black	See FHWA publication Standard Highway Signs for fabrication details									X
XW3-5-B	W3-5	(Reduced Speed Limit Ahead)	*	B	48 X 48	Orange	Black	See FHWA publication Standard Highway Signs for fabrication details									X
XW3-5a-A	W3-5	(Reduced Speed Limit Ahead)	*	A	36 X 36	Orange	Black	See FHWA publication Standard Highway Signs for fabrication details									X
XW3-5a-B	W3-5	(Reduced Speed Limit Ahead)	*	B	48 X 48	Orange	Black	See FHWA publication Standard Highway Signs for fabrication details									X
XW4-2 (R or L)	W4-2	(Lane Ends Merge ____ Symbol)	*	A	36 X 36	Orange	Black	See FHWA publication Standard Highway Signs for fabrication details									X
XW4-2-A (R or L)	W4-2	(Lane Ends Merge ____ Symbol)	*	B	48 X 48	Orange	Black	See FHWA publication Standard Highway Signs for fabrication details									X
XW6-2a-A	W6-2	(Divided Highway Ends Symbol)	*	A	36 X 36	Orange	Black	See FHWA publication Standard Highway Signs for fabrication details									X
WX6-2a-B	W6-2	(Divided Highway Ends Symbol)	*	B	48 X 48	Orange	Black	See FHWA publication Standard Highway Signs for fabrication details									X
XW6-3-B	W6-3	(Two Way Traffic Symbol)	*	B	48 X 48	Orange	Black	See FHWA publication Standard Highway Signs for fabrication details									X
XW8-1-A	W8-1	Bump	*	A	36 X 36	Orange	Black	See FHWA publication Standard Highway Signs for fabrication details									X
XW8-1-B	W8-1	Bump	*	B	48 X 48	Orange	Black	See FHWA publication Standard Highway Signs for fabrication details									X
XW8-2-A	W8-2	Dip	*	A	36 X 36	Orange	Black	See FHWA publication Standard Highway Signs for fabrication details									X
XW8-2-B	W8-2	Dip	*	B	48 X 48	Orange	Black	See FHWA publication Standard Highway Signs for fabrication details									X
XW8-3-A	W8-3	Pavement Ends	*	A	36 X 36	Orange	Black	See FHWA publication Standard Highway Signs for fabrication details									X
XW8-4-A	W8-4	Soft Shoulder	*	A	36 X 36	Orange	Black	See FHWA publication Standard Highway Signs for fabrication details									X
XW8-4-B	W8-4	Soft Shoulder	*	B	48 X 48	Orange	Black	See FHWA publication Standard Highway Signs for fabrication details									X
XW8-6-A	W8-6	Truck Crossing	*	A	36 X 36	Orange	Black	See FHWA publication Standard Highway Signs for fabrication details									X
XW8-6-B	W8-6	Truck Crossing	*	B	48 X 48	Orange	Black	See FHWA publication Standard Highway Signs for fabrication details									X
XW9-1-A (R or L)	W9-1	____ Lane Ends	*	A	36 X 36	Orange	Black	See FHWA publication Standard Highway Signs for fabrication details									X
XW9-1-B (R or L)	W9-1	____ Lane Ends	*	B	48 X 48	Orange	Black	See FHWA publication Standard Highway Signs for fabrication details									X
XW9-2-B (R or L)	W9-2	Lane Ends Merge ____	*	B	48 X 48	Orange	Black	See FHWA publication Standard Highway Signs for fabrication details									X
XW12-1-C	W12-1	Double Arrow	*	B	48 X 48	Orange	Black	See FHWA publication Standard Highway Signs for fabrication details									X
XW13-1-A	W13-1	Advisory Speed Plaque	*	A	36 X 36	Orange	Black	See FHWA publication Standard Highway Signs for fabrication details								-	-
XW20-1	W20-1	Road Construction Ahead	*	B	48 X 48	Orange	Black	1 1/4	3/4	7 - Series C	7 - Series C	7 - Series C	Construction	25	3		X
XW20-1-A	W20-1	Road Construction Ahead	*	B	60 X 60	Orange	Black	1 1/2	1	8 - Series C	8 - Series C	8 - Series C	Construction	25	3		X
XW20-1a	W20-1	Road Repairs Next ___ Miles	*	B	48 X 48	Orange	Black	1 1/4	3/4	8 - Series C	8 - Series C	6 - Series C			3		X
XW20-2	W20-2	Detour Ahead	*	B	48 X 48	Orange	Black	See FHWA publication Standard Highway Signs for fabrication details									X
XW20-3	W20-3	Road Closed Ahead	*	B	48 X 48	Orange	Black	See FHWA publication Standard Highway Signs for fabrication details									X
XW20-4	W20-4	One Lane Road Ahead	*	B	48 X 48	Orange	Black	See FHWA publication Standard Highway Signs for fabrication details									X
XW20-5 (R, C, or	W20-5	_____ Lane Closed Ahead	*	B	48 X 48	Orange	Black	See FHWA publication Standard Highway Signs for fabrication details									X
XW20-7-A	W20-7	Flagger Symbol	*	B	48 X 48	Orange	Black	See FHWA publication Standard Highway Signs for fabrication details									X
XW20-YWR(A)	-	Wide Load Restriction ___ Miles	*	B	48 X 48	Orange	Black	1 1/4	3/4	6 - Series D	6 - Series D	6 - Series D			3		X
XW20-YWR(B)	-	Wide Load Over __ ft Must Exit	*	B	48 X 48	Orange	Black	1 1/4	3/4	6 - Series C	6 - Series C	6 - Series C	6 - Series C		3		X
XW20-YWR(C)	-	No Loads Over ___ ft Wide	*	B	48 X 48	Orange	Black	1 1/4	3/4	6 - Series D	6 - Series D	6 - Series D	6 - Series D		3		X

*Wood post permitted.

NOTES:

(1) Spacing between letters of this word or line shall be reduced by this percentage as shown in the FHWA document, *Standard Highway Signs.*

2. See Standard Drawing E 801-TCSN-01 for additional general notes.

3. All dimensions are in inches.

INDIANA DEPARTMENT OF TRANSPORTATION

TRAFFIC CONTROL SIGN DESIGN DETAILS

SEPTEMBER 2016

STANDARD DRAWING NO. E 801-TCSN-05

DAVID H. BORUFF REGISTERED No. 60900348 STATE OF INDIANA PROFESSIONAL ENGINEER

/s/ David H. Boruff 03/24/16
DESIGN STANDARDS ENGINEER DATE

/s/ Mark A. Miller 03/24/16
CHIEF ENGINEER DATE

SIGN NUMBER	IMUTCD CODE	SIGN MESSAGE	POST DESIGN		SIGN SIZE	SIGN COLOR		BORDER WIDTH	MARGIN WIDTH	LETTER HEIGHT SERIES - LINE 1	LETTER HEIGHT SERIES - LINE 2	LETTER HEIGHT SERIES - LINE 3	WORD OR LINE (1)	PCT. (1)	CORNER RADIUS	NO. OF POSTS	
			4 X 4 WOOD	STEEL		BACKGROUND	COPY									1	2
XW21-1-A	W21-1	Workers Symbol	*	A	36 X 36	Orange	Black	See FHWA publication Standard Highway Signs for fabrication details									X
XW21-2	W21-2	Fresh Oil	*	A	30 X 30	Orange	Black	See FHWA publication Standard Highway Signs for fabrication details								X	
XW21-2-A	W21-2	Fresh Oil	*	A	36 X 36	Orange	Black	See FHWA publication Standard Highway Signs for fabrication details									X
XW21-3-A	W21-3	Road Machinery Ahead	*	B	48 X 48	Orange	Black	See FHWA publication Standard Highway Signs for fabrication details									X
W20-1	W20-1	Road Work Ahead	*	B	48 X 48	Orange	Black	See FHWA publication Standard Highway Signs for fabrication details									X
XW21-5-A	W21-5	Shoulder Work	*	A	36 X 36	Orange	Black	See FHWA publication Standard Highway Signs for fabrication details									X
XW21-6-A	W21-6	Survey Crew	*	A	36 X 36	Orange	Black	See FHWA publication Standard Highway Signs for fabrication details									X
XW21-7	W21-7	Utility Work Ahead	*	A	36 X 36	Orange	Black	See FHWA publication Standard Highway Signs for fabrication details									X
XW21-7-A	W21-7	Utility Work Ahead	*	B	48 X 48	Orange	Black	See FHWA publication Standard Highway Signs for fabrication details									X
XW21-8a	W21-8	Mowing Crews Ahead	*	A	36 X 36	Orange	Black	3/4	1/2	6 - Series C	6 - Series C	6 - Series C			2 1/4		X
XW21-8a-A	W21-8	Mowing Crews Ahead	*	B	48 X 48	Orange	Black	1 1/4	3/4	8 - Series C	8 - Series C	8 - Series C			3		X
XW21-8b	W21-8	Mowing Crews Next ___ Miles	*	A	36 X 36	Orange	Black	3/4	1/2	6 - Series C	6 - Series C	4 - Series C	4 - Series C		2 1/4		X
XW21-8b-A	W21-8	Mowing Crews Next ___ Miles	*	B	48 X 48	Orange	Black	1 1/4	3/4	8 - Series C	8 - Series C	6 - Series C	6 - Series C		3		X
XW103-1	-	Watch for Stopped Traffic	*	B	48 X 48	Orange	Black	1 1/4	3/4	7 - Series C	7 - Series C	7 - Series C			3		X
XG20-1	G20-1	Road Construction Next __ Miles	*	B	60 X 36	Orange	Black	3/4	1/2	6 - Series C	6 - Series C	6 - Series C			2 1/4		X
XG20-2	G20-2	End Construction	*	B	60 X 24	Orange	Black	1/2	3/8	6 - Series C	6 - Series C				1 1/2		X
G20-2	G20-2	End Road Work	*	B	48 X 18	Orange	Black	See FHWA publication Standard Highway Signs for fabrication details									X
XG20-4	G20-4	Pilot Car Follow Me	-	-	36 X 18	Orange	Black	See FHWA publication Standard Highway Signs for fabrication details								-	-
XG20-5	-	(Route Number or Lane Closed On or After ____)	*	B	60 X 36	Orange	Black	3/4	1/2	6 - Series C	6 - Series C	6 - Series C			2 1/4		X
XG20-5P	XG20-5P	Worksite Plaque	-	-	48 X 16	Orange	Black	1/2	3/8	8 - Series C					1 1/2	-	-
XW20-6	-	Lane Restrictions On or After _____	*	B	60 X 36	Orange	Black	3/4	1/2	5 - Series C	5 - Series C	4 - Series C			1 7/8		X
XW20-6A	-	Lane Restrictions On or After _____	*	B	72 X 36	Orange	Black	7/8	5/8	6 - Series C	6 - Series C	5 - Series C			2 1/4		X
XM4-9 (R or L)	M4-9	Detour (Above Black Arrow)	*	A	30 X 24	Orange	Black	See FHWA publication Standard Highway Signs for fabrication details								X	
XM4-9-B (R or L)	M4-9	Detour (Above Black Arrow)	*	B	48 X 36	Orange	Black	See FHWA publication Standard Highway Signs for fabrication details									X
XM4-Y9d	-	_____ St / Detour Arrow	*	B	L X 36	Orange	Black	1/2	3/8	4 - Series C	6 - Series C		1	30	1 1/2	X (L ≤ 42)	X (L > 42)
XM4-Y9e	-	_____ St / Direction / Detour Arrow	*	B	L X 48	Orange	Black	1/2	3/8	4 - Series C	6 -Series C	6 -Series C	1	30	1 1/2	X (L ≤ 36)	X (L > 36)
XM4-10 (R or L)	M4-10	Detour (Inside Orange Arrow)	*	B	48 X 18	Black & Orange	Black	See FHWA publication Standard Highway Signs for fabrication details									X
XW105-1-A	-	Right Lane Exit Open	*	B	48 X 48	Orange	Black	1 1/4	3/4	6 - Series C	6 - Series C				3		X
XW106-1-A	-	Exit Closed	*	B	48 X 48	Orange	Black	1 1/4	3/4	7 - Series C	7 - Series C				3		X
XW106-2-A	-	Exit Open	*	B	48 X 48	Orange	Black	1 1/4	3/4	7 - Series C	7 - Series C				3		X
XW109-1	-	Exit (Above Black Arrow)	*	B	48 X 48	Orange	Black	See FHWA publication Standard Highway Signs for fabrication details									X

*Wood post permitted.

NOTES:

(1) Spacing between letters of this word or line shall be reduced by this percentage as shown in the FHWA document, *Standard Highway Signs.*

2. See Standard Drawing E 801-TCSN-01 for additional general notes.

3. All dimensions are in inches.

INDIANA DEPARTMENT OF TRANSPORTATION

TRAFFIC CONTROL SIGN DESIGN DETAILS

SEPTEMBER 2016

STANDARD DRAWING NO. E 801-TCSN-06

DAVID H. BORUFF REGISTERED No. 60900348 STATE OF INDIANA PROFESSIONAL ENGINEER

/s/ David H. Boruff 03/24/16
DESIGN STANDARDS ENGINEER DATE

/s/ Mark A. Miller 03/24/16
CHIEF ENGINEER DATE

PAGE INTENTIONALLY LEFT BLANK

APPENDIX G

SMALL STRUCTURE # 21037 (BRIDGE # 311)
206TH STREET / FINLEY CREEK

PAGE INTENTIONALLY LEFT BLANK

TENCATE GEOSYNTHETICS
Americas

Mirafi® HP570

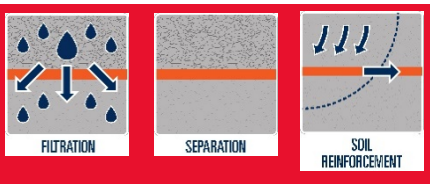

Mirafi® HP570 geotextile is composed of high-tenacity polypropylene yarns, which are woven into a network such that the yarns retain their relative position. Mirafi® HP570 geotextile is inert to biological degradation and resistant to naturally encountered chemicals, alkalis, and acids.

TenCate Geosynthetics Americas is accredited by Geosynthetic Accreditation Institute – Laboratory Accreditation Program (GAI-LAP). NTPEP Listed

Mechanical Properties	Test Method	Unit	Minimum Average Roll Value	
			MD	CD
Tensile Strength (at ultimate)	ASTM D4595	lbs/ft (kN/m)	4800 (70.0)	4800 (70.0)
Tensile Strength (at 5% strain)	ASTM D4595	lbs/ft (kN/m)	2400 (35.0)	3000 (43.8)
			Minimum Roll Value	
Flow Rate	ASTM D4491	gal/min/ft^2 (l/min/m^2)	30 (1222)	
Permittivity	ASTM D4491	sec^{-1}	0.5	
			Maximum Opening Size	
Apparent Opening Size (AOS)	ASTM D4751	U.S. Sieve (mm)	30 (0.60)	
			Minimum Test Value	
UV Resistance (at 500 hours)	ASTM D4355	% strength retained	80	

Physical Properties	Unit	Roll Size	
Roll Dimensions (length x width)	ft (m)	15 x 300 (4.5 x 91)	17 x 265 (5.18 x 80.8)
Roll Area	yd^2 (m^2)	500 (418)	500 (418)

Disclaimer: TenCate assumes no liability for the accuracy or completeness of this information or for the ultimate use by the purchaser. TenCate disclaims any and all express, implied, or statutory standards, warranties or guarantees, including without limitation any implied warranty as to merchantability or fitness for a particular purpose or arising from a course of dealing or usage of trade as to any equipment, materials, or information furnished herewith. This document should not be construed as engineering advice.

Mirafi® is a registered trademark of Nicolon Corporation.

Copyright © 2015 Nicolon Corporation. All Rights Reserved.

365 South Holland Drive
Pendergrass, GA 30567
FGS000049
ETQR43

Tel 706 693 2226
Tel 888 795 0808

Fax 706 693 4400
www.tencate.com

GAI-LAP-25-97