HAMILTON COUNTY, INDIANA

STRUCTURE	TYPE	SPAN AND SKEW	OVER	STATION
SMALL STRUCTURE # 21037 (BRIDGE # 311)	COMPOSITE PRESTRESSED CONCRETE BOX BEAM BRIDGE	1 SPAN AT 45'-6" SKEW: 3°-00" RT.	FINLEY CREEK	11+90.0 Line "A"

REPLACEMENT PLAN FOR SMALL STRUCTURE NO. 21037 (BRIDGE NO. 311) 206th STREET OVER FINLEY CREEK WASHINGTON TOWNSHIP PROJECT NO. PB-18-0003

REPLACEMENT OF HAMILTON COUNTY SMALL STRUCTURE NO. 21037 (BRIDGE NO. 311)
206TH STREET OVER FINLEY CREEK, 1,600 FEET WEST OF LAMONG ROAD IN SECTION
17 & 20, T 19N, R3E, WASHINGTON TOWNSHIP , HAMILTON COUNTY, INDIANA.

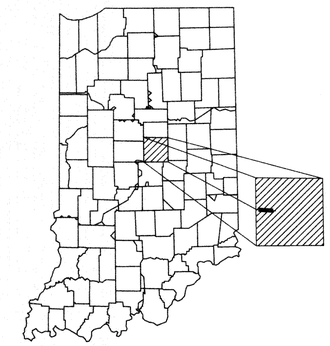

PROJECT LOCATION SHOWN BY

LATITUDE: 40° 05' 08" N LONGITUDE: 86° 12' 33" W

TRAFFIC DATA

A.A.D.T. (Projected)	(2020)	607 V.P.D.
A.A.D.T. (Projected)	(2040)	1,076 V.P.D.

DESIGN DATA

DESIGN SPEED	40 M.P.H.
FUNCTIONAL CLASSIFICATION	Primary Arterial
ACCESS CONTROL	None
REGULATED DRAIN	Yes - Open Stream

INDEX

SHEET NO.	SUBJECT
1	TITLE AND INDEX
2	TYPICAL SECTIONS
3	DETOUR ROUTE
4	PLAN AND PROFILE
5	CHANNEL SECTIONS
6	EROSION CONTROL PLAN
7	SOIL BORINGS
8	GENERAL PLAN
9-10	ABUTMENT DETAILS
11	FRAMING PLAN
12	BEAM DETAILS
13	SUPERSTRUCTURE DETAILS
14	RAILING DETAILS
15-16	SUMMARY TABLES
17-22	CROSS SECTIONS

Indiana 811
Know what's below. Call before you dig.

1-800-382-5544
CALL BEFORE YOU DIG
CAUTION !!

THE LOCATIONS OF ALL EXISTING UNDERGROUND UTILITIES SHOWN ON THIS PLAN ARE BASED UPON ABOVE GROUND EVIDENCE (including, but limited to, manholes, inlets, valves, and marks made upon the ground by others) AND ARE SPECULATIVE IN NATURE. THERE MAY ALSO BE OTHER EXISTING UNDERGROUND UTILITIES FOR WHICH THERE IS NO ABOVE GROUND EVIDENCE OR FOR WHICH NO ABOVE GROUND EVIDENCE WAS OBSERVED. THE EXACT LOCATION OF SAID EXISTING UNDERGROUND UTILITIES SHALL BE VERIFIED BY THE CONTRACTOR PRIOR TO ANY AND ALL CONSTRUCTION.

BRIDGE LENGTH	50.5 FT
ROADWAY LENGTH	749.5 FT
TOTAL LENGTH	800.0 FT
MAX. GRADE	4.28%

PROJECT LOCATION
Begin Project Sta. 7+50 "A"
End Project Sta. 15+50 "A"

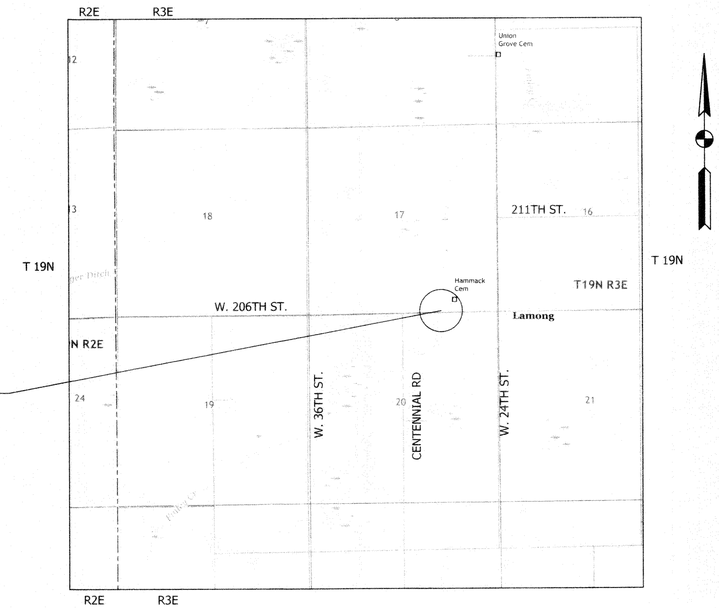

LOCATION MAP
SCALE: 1" = 2,000'
0' 2000' 4000'

GRS ABUTMENT DESIGN PREPARED BY CTL ENGINEERING, INC.
CERTIFICATION OF THE PLANS AND DOCUMENTS PREPARED BY INFRASTRUCTURE ENGINEERING, INC. COVERS STRUCTURE SIZING AND LOCATION, SUPERSTRUCTURE DESIGN BUT DOES NOT COVER GRS ABUTMENT DESIGN PREPARED BY CTL ENGINEERING, INC.

INDIANA DEPARTMENT OF TRANSPORTATION
STANDARD SPECIFICATIONS DATED 2020
TO BE USED WITH THESE PLANS.

PLANS APPROVED BY:
HAMILTON COUNTY BOARD OF COMMISSIONERS DATE 9/14/2020

CHRISTINE ALTMAN, PRESIDENT

MARK HEIRBRANDT, MEMBER

STEVE C. DILLINGER, MEMBER

ATTEST

ROBIN MILLS, COUNTY AUDITOR

RECOMMENDED FOR APPROVAL

JAMES W. NEAL, PE, COUNTY HIGHWAY ENGINEER

INFRASTRUCTURE ENGINEERING | INCORPORATED
201 South Capitol Avenue | Suite 490 | Indianapolis, IN 46225
P 317.243.9800 | F 317.243.9100 | www.infrastructure-eng.com

NICHOLAS D. BERGMAN DATE 09/07/2020

NICHOLAS D. BERGMAN REGISTERED No. 10707534 STATE OF INDIANA PROFESSIONAL ENGINEER

Last Update: Sep 09, 2020 - 7:27am
Drawing name: Q:\P-18\3722-00 - 206th Street Finley Creek (Hamilton Co)\DWG\Sheets\3722 - Title.dwg

UTILITIES

Duke Energy
Dan Benson
100 S. Mill Creek Rd.
Noblesville IN 46062
317-315-4681
dan.benson@duke-energy.com

AT&T
Curtis Miller
116 E. Taylor St.
Kokomo, IN 46901
765-454-4051
cm5432@att.net

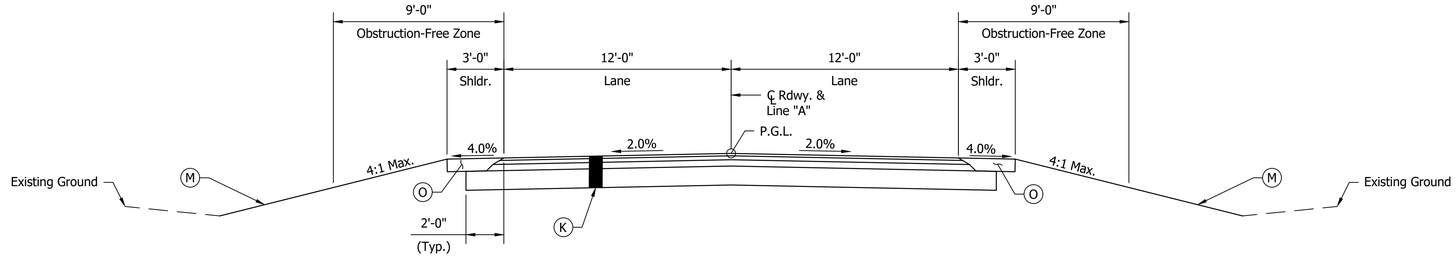

TYPICAL MAINLINE SECTION

Scale: ¼" = 1'-0"
Sta. 7+50.00 to Sta. 11+64.75
Sta. 12+15.25 to Sta. 15+50.00

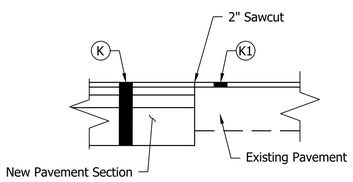

MATCHING EXISTING PAVEMENT

Not to Scale
(Required at Each End of Project)

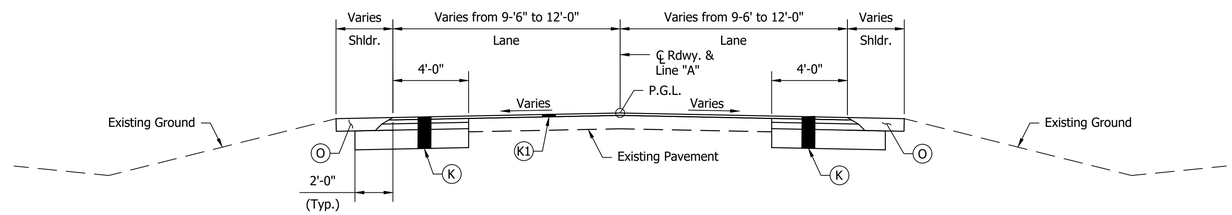

TYPICAL INCIDENTAL SECTION

Scale: ¼" = 1'-0"
Sta. 7+00.00 to Sta. 7+50.00
Sta. 15+50.00 to Sta. 16+00.00

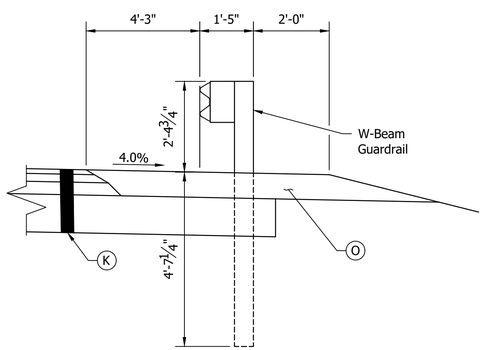

TYPICAL SECTION WITH GUARDRAIL

Not to Scale
Sta. 10+51.39 to Sta. 11+63.89 Right
Sta. 10+96.86 to Sta. 11+65.61 Left
Sta. 12+11.51 to Sta. 12+38.76 Right
Sta. 12+13.61 to Sta. 13+26.11 Left

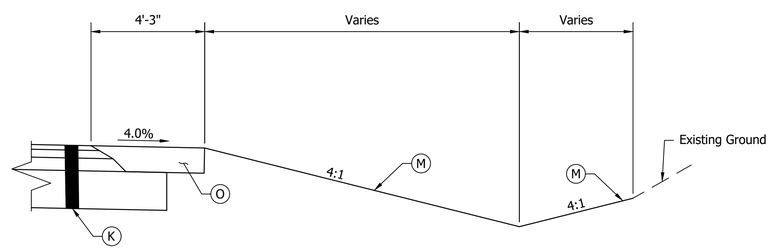

SPECIAL V DITCH

Not to Scale
Sta. 12+27.50 to Sta. 14+00.00 Right

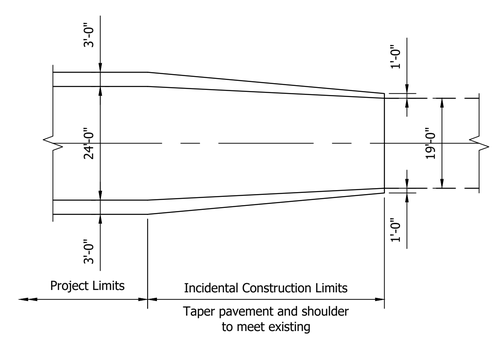

PLAN - MATCHING EXISTING PAVEMENT

Not to Scale
(Required at each end of project)

LEGEND

- (K) 165 lb/sys QC/QA-HMA, 2, 64, Surface, 9.5 mm on 275 lb/sys QC-QA-HMA, 2, 64, Intermediate, 19.0 mm on 440 lb/sys QC-QA-HMA, 2, 64, Base, 25.0 mm on Subgrade Treatment, Type IC Modified
- (K1) Mill existing pavement 1½" the ovelay 165 lb/sys QC/QA-HMA, 2, 64, Surface, 9.5 mm
- (M) Mulched Seeding, Type R
- (O) 8" Compacted Aggregate No. 53

NOTES:
- All Stationing Along Line "A"
-See INDOT Standard Drawing E 601-GRET-06 for grading detail at the guardrail end treatment, type OS

INFRASTRUCTURE ENGINEERING | INCORPORATED
201 South Capitol Avenue | Suite 490 | Indianapolis, IN 46225
P 317.243.5800 | F 317.243.5100 | www.infrastructure-eng.com

Last Update: Sep 04, 2020 - 4:39pm
Drawing name: Q:\P-18\3722-00 - 206th Street Finley Creek (Hamilton Co)\DWG\Sheets\3722 - Typical Sections.dwg

NICHOLAS D. BERGMAN REGISTERED No. 10707534 STATE OF INDIANA PROFESSIONAL ENGINEER

RECOMMENDED FOR APPROVAL	DESIGN ENGINEER	09/07/2020 DATE	
DESIGNED: EAS	09/2020	DRAWN: EAS	09/2020
CHECKED: NDB	09/2020	CHECKED: DTQ	09/2020

HAMILTON COUNTY, INDIANA

TYPICAL SECTIONS

HORIZONTAL SCALE	BRIDGE FILE
AS NOTED	HAMILTON 311
VERTICAL SCALE	DESIGNATION
AS NOTED	
SURVEY BOOK	SHEET
	2 of 22
CONTRACT	PROJECT

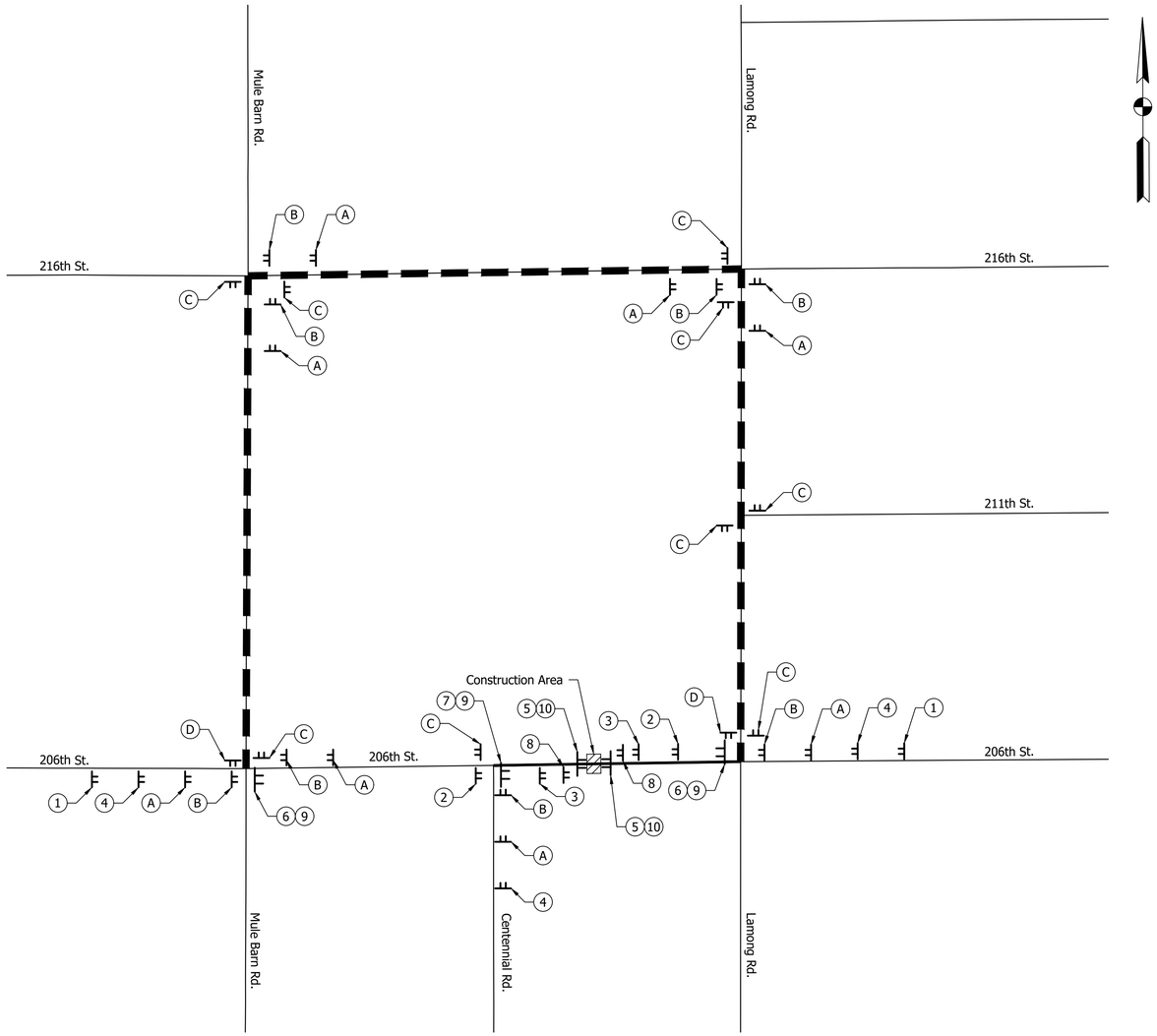

CONSTRUCTION SIGN SUMMARY TABLE				
SYMBOL	MESSAGE	NUMBER	TYPE	REQ'D
X (A ,B, C, D)	DETOUR ROUTE MARKER ASSEMBLY	DRMA		27 EA
1	ROAD CLOSED AHEAD	XW20-3	A	2 EA
2	ROAD CLOSED 1000 FEET	XW20-3	A	2 EA
3	ROAD CLOSED 500 FEET	XW20-3	A	2 EA
4	DETOUR AHEAD	XW20-2	A	3 EA
5	ROAD CLOSURE SIGN ASSEMBLY, "ROAD CLOSED" (R11-2), AND TYPE B LIGHTS	RCSA		2 EA
6	ROAD CLOSURE SIGN ASSEMBLY, "ROAD CLOSED - LOCAL TRAFFIC ONLY" (R11-3), DETOUR ARROW (XM4-10), AND TYPE B LIGHTS	RCSA		2 EA
7	ROAD CLOSURE SIGN ASSEMBLY, "ROAD CLOSED TO THRU TRAFFIC" (R11-4) AND TYPE B LIGHTS	RCSA		1 EA
8	206TH ST CLOSED ON OR AFTER	XG20-5	C	2 EA
9	BARRICADE (8 LFT EACH)	BARR	III-B	24 LFT
10	BARRICADE (24 LFT EACH)	BARR	III-A	48 LFT

NOTES

1. Refer to INDOT Std. Drawing 801-TCDT-01 and 801-TCDT-04 for sign assembly and spacing.
2. Contractor shall maintain access to all properties at all times during construction including temporary stone, steel plating, barricades, lights, barrels, etc. as needed to maintain drivable access around the active construction site.
3. Road closure signage is shown in approximate locations. Contractor shall adjust as needed.
4. Contractor shall furnish and maintain in proper working order all construction signs, lights, channelizing devices, and all other traffic control devices.
5. All signs shall be positioned toward the on-coming traffic within the right-of-way on the side of the road shown, unless otherwise noted.

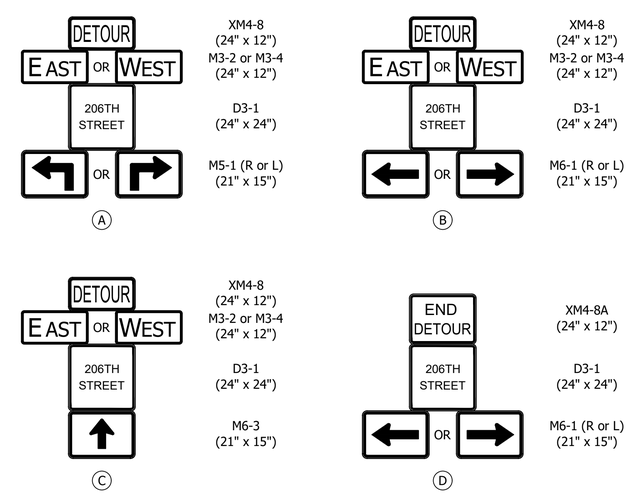

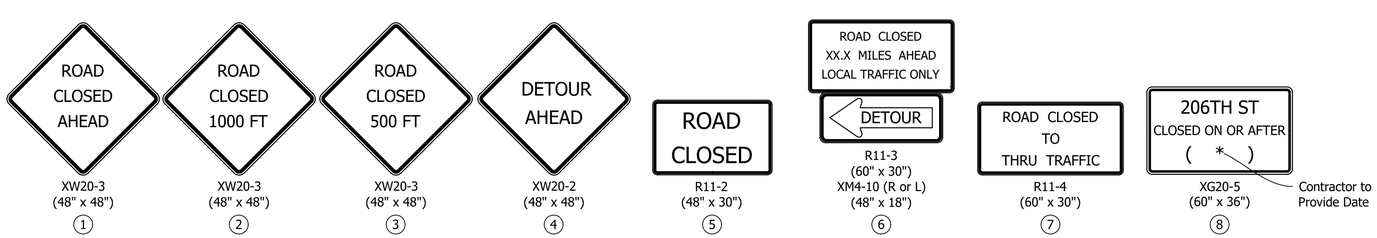

LEGEND

- Construction sign type a with low intensity flashing yellow light
- Type III-A/III-B barricades as required
- Road to be closed during construction
- Proposed detour route
- Construction Area

NICHOLAS D. BERGMAN REGISTERED No. 10707534 STATE OF INDIANA PROFESSIONAL ENGINEER

RECOMMENDED FOR APPROVAL — DESIGN ENGINEER — 09/07/2020 DATE

DESIGNED: EAS 09/2020 | DRAWN: EAS 09/2020

CHECKED: NDB 09/2020 | CHECKED: DTQ 09/2020

HAMILTON COUNTY, INDIANA

DETOUR ROUTE

HORIZONTAL SCALE	BRIDGE FILE
AS NOTED	HAMILTON 311
VERTICAL SCALE	DESIGNATION
AS NOTED	
SURVEY BOOK	SHEET
	3 of 22
CONTRACT	PROJECT

INFRASTRUCTURE ENGINEERING | INCORPORATED
201 South Capitol Avenue | Suite 490 | Indianapolis, IN 46225
P 317.243.8890 | F 317.243.9100 | www.infrastructure-eng.com

Last Update: Aug 28, 2020 - 2:31pm
Drawing name: Q:\P-18\3722-00 - 206th Street Finley Creek (Hamilton Co)\DWG\Sheets\3722 - Detour.dwg

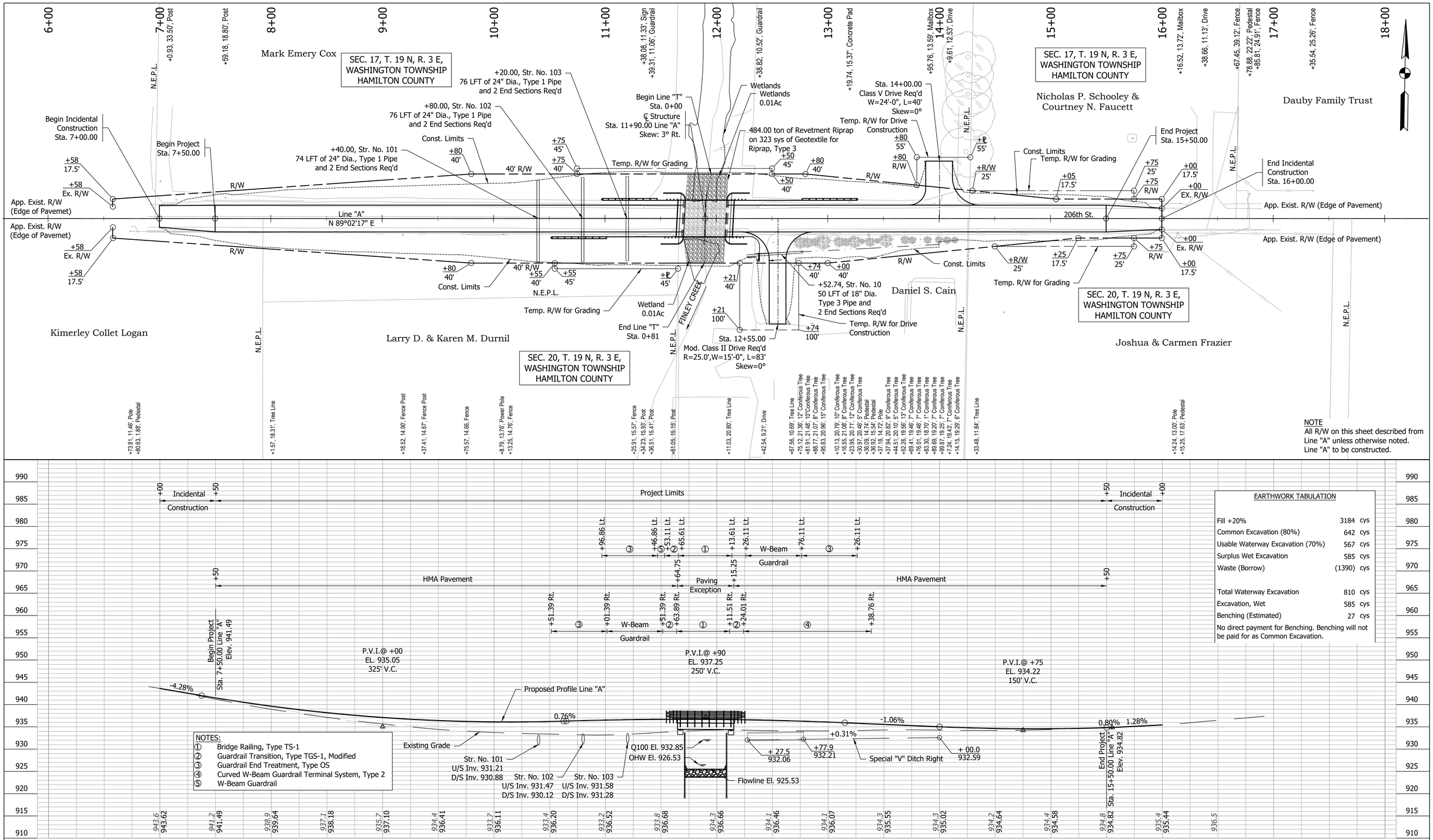

EARTHWORK TABULATION

Fill +20%	3184	cys
Common Excavation (80%)	642	cys
Usable Waterway Excavation (70%)	567	cys
Surplus Wet Excavation	585	cys
Waste (Borrow)	(1390)	cys
Total Waterway Excavation	810	cys
Excavation, Wet	585	cys
Benching (Estimated)	27	cys

No direct payment for Benching. Benching will not be paid for as Common Excavation.

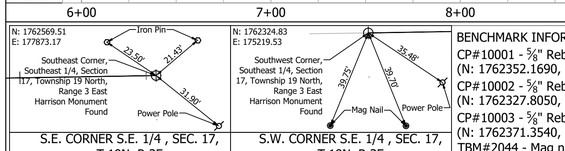

S.E. CORNER S.E. 1/4 , SEC. 17, T.19N, R.3E

S.W. CORNER S.E. 1/4 , SEC. 17, T.19N, R.3E

BENCHMARK INFORMATION:
CP#10001 - ⅝" Rebar with cap was set in the grass on the north side of 206th Street.
(N: 1762352.1690, E: 175834.2180, Elev.: 942.22)
CP#10002 - ⅝" Rebar with cap was set in the grass on the south side of 206th Street.
(N: 1762327.8050, E: 176829.6980, Elev.: 932.11)
CP#10003 - ⅝" Rebar with cap was set in the grass on the north side of 206th Street.
(N: 1762371.3540, E: 176829.6980, Elev.: 936.38)
TBM#2044 - Mag nail in north face of power pole. (N: 1762337.4860, E: 176733.8430, Elev.: 936.45)

NICHOLAS D. BERGMAN REGISTERED No. 10707534 STATE OF INDIANA PROFESSIONAL ENGINEER

RECOMMENDED FOR APPROVAL — DESIGN ENGINEER — 09/07/2020 DATE

DESIGNED: EAS	06/2020	DRAWN: EAS	06/2020
CHECKED: NDB	06/2020	CHECKED: DTQ	06/2020

HAMILTON COUNTY, INDIANA

PLAN AND PROFILE
LINE "A"

HORIZONTAL SCALE 1" = 40'	BRIDGE FILE HAMILTON 311
VERTICAL SCALE 1" = 10'	DESIGNATION
SURVEY BOOK	SHEET 4 of 22
CONTRACT	PROJECT

INFRASTRUCTURE ENGINEERING | INCORPORATED
201 South Capitol Avenue | Suite 490 | Indianapolis, IN 46225
P 317.243.5800 | F 317.243.9100 | www.infrastructure-eng.com

Last Update: Sep 09, 2020 - 11:07am
Drawing name: C:\Users\esler\AppData\Local\Temp\AcPublish_22880\3722 - Plan and Profile.dwg

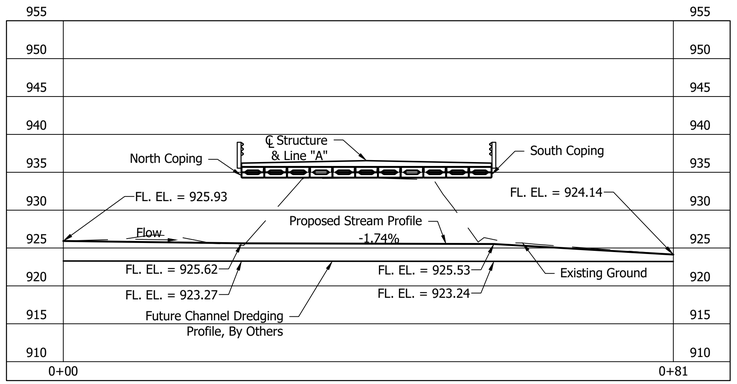

PROFILE ALONG FINLEY CREEK - LINE "T"

Scale: 1" = 10'

Grasses and Sedges		
Scientific Name	Common Name	Percent of Mix
Carex frankii	Frank's Sedge	1.06%
Carex granularis	Meadow Sedge	1.05%
Carex lupulina	Hop Sedge	0.67%
Carex muskingumensis	Muskingum Sedge	3.49%
Carex normalis	Larger Straw Sedge	3.25%
Carex shortiana	Short's Sedge	1.51%
Cinna arundinacea	Stout Wood Reedgrass	3.18%
Elymus canadensis	Canada Wild Rye	11.15%
Elymus riparius	Riverbank Wild Rye	1.96%
Elymus virginicus	Virginia Wild Rye	15.24%
Glyceria striata	Fowl Manna Grass	8.69%
Leersia oryzoides	Rice Cut Grass	14.40%
Panicum virgatum	Switch Grass	3.16%
Scirpus atrovirens	Dark Green Rush	15.31%
Scirpus pendulus	Drooping Bulrush	15.88%

Forbes		
Scientific Name	Common Name	Percent of Mix
Ageratina altissima	White Snakeroot	3.07%
Asclepias incarnata	Marsh Milkweed	0.97%
Bidens cernua	Nodding Bur Marigold	7.74%
Eutrochium purpureum	Purple Joe Pye Weed	5.94%
Helenium autumnale	Common Sneezeweed	8.82%
Heliopsis helianthoides	False Sunflower	1.29%
Mimulus ringens Alleghany	Monkey Flower	55.82%
Rudbeckia laciniata	Cut-Leaf Coneflower	3.03%
Rudbeckia triloba	Brown-Eyed Susan	4.35%
Senna hebecarpa	Wild Senna	0.29%
Silphium perfoliatum	Cup-Plant	0.32%
Symphyotrichum novae-angliae	New England Aster	4.59%
Verbesina alternifolia	Wingstem	2.34%
Zizea aurea	Golden Alexander	1.44%

CHANNEL REVEGETATION SEED MIX

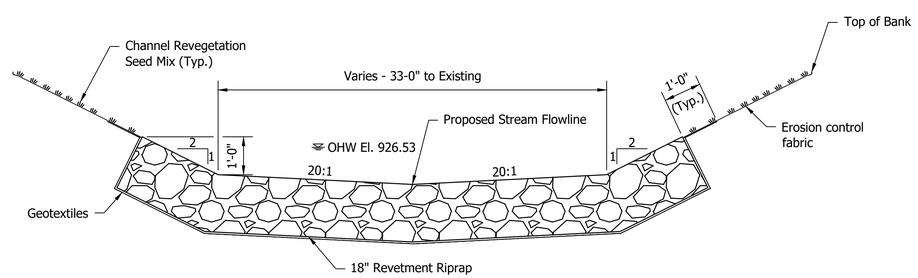

CHANNEL STABILIZATION REVEGETATION

Scale: 1" = 2'

INFRASTRUCTURE ENGINEERING | INCORPORATED
201 South Capitol Avenue | Suite 490 | Indianapolis, IN 46225
P 317.243.5890 | F 317.243.5100 | www.infrastructure-eng.com

Last Update: Sep 09, 2020 - 9:01am
Drawing name: Q:\P-18\3722-00 - 206th Street Finley Creek (Hamilton Co)\DWG\Sheets\3722 - Channel Sections.dwg

NICHOLAS D. BERGMAN REGISTERED No. 10707534 STATE OF INDIANA PROFESSIONAL ENGINEER

RECOMMENDED FOR APPROVAL — DESIGN ENGINEER — DATE 09/07/2020

DESIGNED: EAS 09/2020 | DRAWN: EAS 09/2020

CHECKED: NDB 09/2020 | CHECKED: DTQ 09/2020

HAMILTON COUNTY, INDIANA

CHANNEL SECTIONS

HORIZONTAL SCALE	BRIDGE FILE
AS NOTED	HAMILTON 311
VERTICAL SCALE	DESIGNATION
AS NOTED	
SURVEY BOOK	SHEET
	5 of 22
CONTRACT	PROJECT

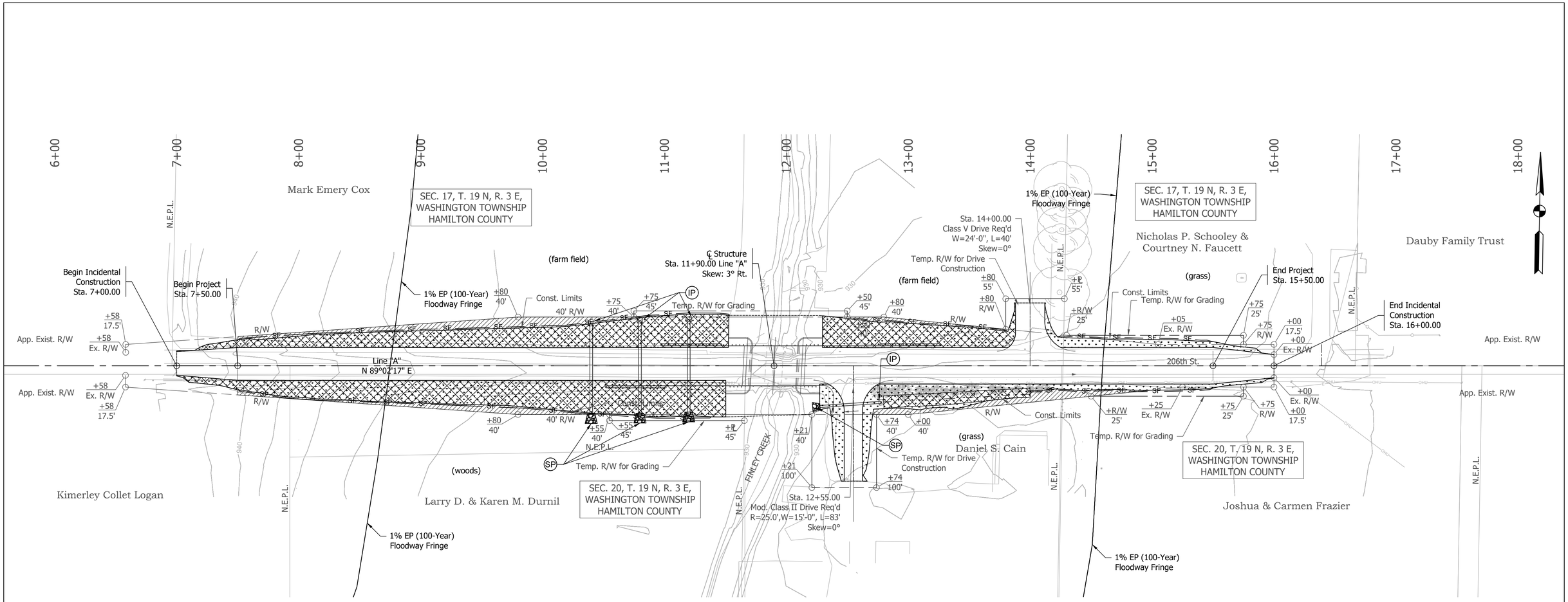

EROSION CONTROL PLAN

1" = 40'

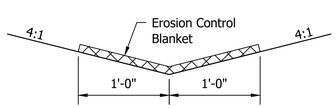

EROSION CONTROL BLANKET IN V DITCH

Not to Scale

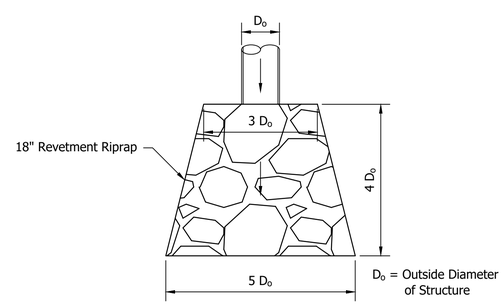

SPLASH PAD DETAIL

Not to Scale

TEMPORARY EROSION CONTROL TABLE

LOCATION	PERIMETER PROTECTION	MANUFACTURED SURFACE PROTECTION PRODUCT	TEMPORARY SEEDING	INLET PROTECTION	RIPRAP SPLASHPAD
	LFT	SYS	SYS	EACH	CYS
Northwest	403	754	754	3	
Southwest	390	966	966		32
Northeast	250	345	468		
Southeast	150	121	475	1	6
TOTAL	1193	2186	2663	4	38

NOTE:
1. Refer to INDOT Standard Drawings E 205-TECD-01 to 12 for erosion control measure details.
2. The splash pads shall remain in place after construction is completed.

EROSION CONTROL LEGEND

(IP)	INLET PROTECTION		DO NOT DISTURB VEGETATION		MANUFACTURED SURFACE PROTECTION PRODUCT
(SP)	SPLASH PAD		TEMPORARY SEEDING		
— SF —	SILT FENCE		SPLASH PAD		

NICHOLAS D. BERGMAN REGISTERED No. 10707534 STATE OF INDIANA PROFESSIONAL ENGINEER

RECOMMENDED FOR APPROVAL — DESIGN ENGINEER — DATE 09/07/2020

DESIGNED: EAS 09/2020 DRAWN: EAS 09/2020

CHECKED: NDB 09/2020 CHECKED: DTQ 09/2020

HAMILTON COUNTY, INDIANA

EROSION CONTROL PLAN

HORIZONTAL SCALE	BRIDGE FILE
AS NOTED	HAMILTON 311
VERTICAL SCALE	DESIGNATION
N/A	
SURVEY BOOK	SHEET
	6 of 22
CONTRACT	PROJECT

INFRASTRUCTURE ENGINEERING | INCORPORATED
201 South Capitol Avenue | Suite 490 | Indianapolis, IN 46225
P 317.243.5890 | F 317.243.5100 | www.infrastructure-eng.com

Last Update: Sep 04, 2020 - 7:23am
Drawing name: Q:\P-18\3722-00 - 206th Street Finley Creek (Hamilton Co)\DWG\Sheets\3722 - Erosion Control.dwg

TEST BORING RECORD

CLIENT : Infrastructure Engineering, Inc
PROJECT : Culvert Replacement
ROUTE NO. : 206th Street COUNTY : Hamilton
LOCATION : 206th Street over Finley Creek
DES NO. : ---- PROJECT NO. : ----

BORING NO. : TB-1
SHEET : 1 OF 2
DATE STARTED : 10-17-18
DATE COMPLETED : 10-18-18
CTL PROJECT NO : 18050069ND

Boring Elevation : 936.0 Feet
Northing : 1,762,369
Easting : 176,304
Datum : NAD 83, Indiana East
Boring Depth : 50.0 feet
Station : 11+70
Offset : 7.0 feet Rt
Line : "A"
Boring Method : HSA
Rig Type : CME-550 ATV
Casing Diameter : 3.25" I.D.
Core Size : ----
Hammer : Automatic
Hammer Efficiency : 86.0
Driller/Inspector : JS/DW
Temperature : 50° F
Weather : Sunny

GROUNDWATER: ▽ Encountered at 15.0 feet ▽ At completion 11.9 feet ▽ 2.7 feet After 24 hours ▽ Caved in at 25.0 feet

Stratum Elevation	Sample Depth	SOIL/MATERIAL DESCRIPTION	Stratum Depth	Sample Number	SPT per 6"	SPT per 12" (N)	Recovery (%)	Moisture Content (%)	Total Unit Weight (pcf)	Unconfined Compression (ksf)	Atterberg Limits LL	PL	PI
935.2		ASPHALT CONCRETE (10") (Visual)	0.8										
935.0*		SAND AND GRAVEL BASE (4") (Visual)	1.0										
	2.5	Brown, Moist, Medium Stiff to Stiff, CLAY LOAM A-6, As Lab 2		SS-1	6 3 6	9	78	19.0					
	5.0			SS-2	5 3 6	9	56	30.8					
	7.5			SS-3	6 4 4	8	100	13.2	132.0	5.646 ● 11.1%			
	10.0			SS-4	9 6 6	12	100	11.8	105.5	5.094 ● 10.8%			
	12.5			SS-5	11 4 6	10	100	11.2					
922.5			13.5										
	15.0	Gray, Moist, Medium Stiff to Very Stiff, LOAM A-6, As Lab 1		SS-6	20 11 11	22	100	8.9					
920.0			16.0										
	17.5	Brown, Wet, Medium Dense, SAND with Traces of Clay in SS-7B (Visual)		SS-7	23 9 8	17	100	11.9					
917.5			18.5										
	20.0	Gray, Moist, Soft to Very Stiff, CLAY LOAM A-6, As Lab 2		SS-8	8 5 5	10	100	12.5					
915.0			21.0										
	22.5	Gray, Moist to Very Moist, Very Stiff to Hard, SANDY LOAM A-2-4 (0), Lab 4		SS-9	10 8 9	17	100	11.0					
	25.0			SS-10	10 15	31	100	13.5			18	13	5

Continued on next page

CTL Engineering, Inc.
Phone: 317-295-8650

BORING METHOD	SAMPLING METHOD	ABBREVIATIONS
HSA – Hollow Stem Auger	SS – Split Spoon Sample	* – Hand Penetrometer
SFA – Solid Flight Auger	ST – Shelby Tube Sample	LL – Liquid Limit
RC – Rock Coring	CR – Rock Core Sample	PL – Plastic Limit
MD – Mud Drilling	BS – Bag Sample	PI – Plasticity Index
WD – Wash Drilling	AC – Auger Cuttings	SPT – Standard Penetration Test
HA – Hand Auger	SBS – Subbase Sample	

TEST BORING RECORD

CLIENT : Infrastructure Engineering, Inc
PROJECT : Culvert Replacement

BORING NO. : TB-1
SHEET : 2 OF 2

Stratum Elevation	Sample Depth	SOIL/MATERIAL DESCRIPTION	Stratum Depth	Sample Number	SPT per 6"	SPT per 12" (N)	Recovery (%)	Moisture Content (%)	Total Unit Weight (pcf)	Unconfined Compression (ksf)	Atterberg Limits LL	PL	PI
	27.5	Gray, Moist to Very Moist, Very Stiff to Hard, SANDY LOAM A-2-4 (0), Lab 4			16								
907.5			28.5										
	30.0			SS-11	6 5 6	11	100	12.5					
	32.5	Gray, Moist to Very Moist, Stiff to Medium Stiff, SANDY LOAM Encountered heaving Sand at 35 feet and washed out with water during drilling A-4 (0), Lab 5											
	35.0			SS-12	0 2 5	7	100	16.6			18	13	5
	37.5												
897.0			39.0										
	40.0	Gray, Wet to Very Moist, Medium Stiff to Stiff, SILT with Traces of Clay (Visual)		SS-13	6 5 6	11	100	11.4					
	42.5												
892.5			43.5										
	45.0	Gray, Moist, Medium Stiff to Very Stiff, SANDY LOAM A-4, As Lab 5		SS-14	8 11 15	26	100	10.8	143.9	5.924 ● 11.0%			
	47.5												
886.0	50.0	Bottom of Boring at 50.0 feet	50.0	SS-15	15 19 37	56	39	11.9					
	52.5	Boring backfilled in accordance with INDOT requirements and pavement restored with concrete patch.											
	55.0												

CTL Engineering, Inc.
Phone: 317-295-8650

BORING METHOD	SAMPLING METHOD	ABBREVIATIONS
HSA – Hollow Stem Auger	SS – Split Spoon Sample	* – Hand Penetrometer
SFA – Solid Flight Auger	ST – Shelby Tube Sample	LL – Liquid Limit
RC – Rock Coring	CR – Rock Core Sample	PL – Plastic Limit
MD – Mud Drilling	BS – Bag Sample	PI – Plasticity Index
WD – Wash Drilling	AC – Auger Cuttings	SPT – Standard Penetration Test
HA – Hand Auger	SBS – Subbase Sample	

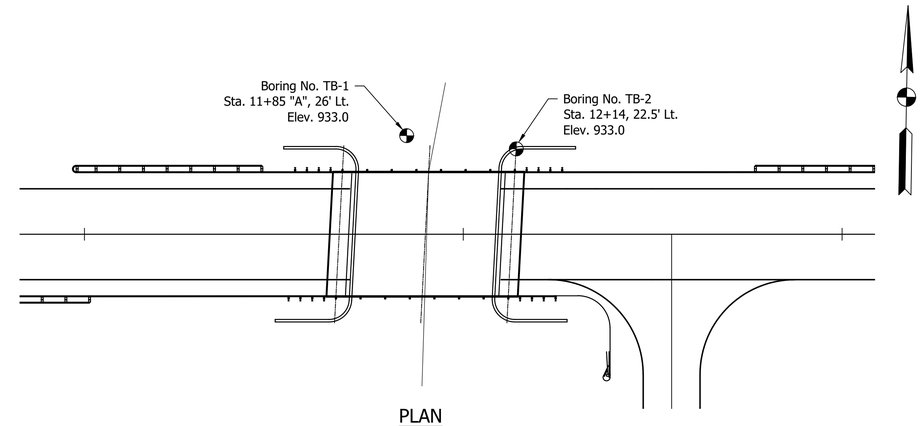

PLAN
Scale: 1" = 20'

TEST BORING RECORD

CLIENT : Infrastructure Engineering, Inc
PROJECT : Culvert Replacement
ROUTE NO. : 206th Street COUNTY : Hamilton
LOCATION : 206th Street over Finley Creek
DES NO. : ---- PROJECT NO. : ----

BORING NO. : TB-2
SHEET : 1 OF 3
DATE STARTED : 10-18-18
DATE COMPLETED : 10-18-18
CTL PROJECT NO : 18050069ND

Boring Elevation : 936.0 Feet
Northing : 1,762,366
Easting : 176,333
Datum : NAD 83, Indiana East
Boring Depth : 70.0 feet
Station : 12+10
Offset : 6.0 feet Lt
Line : "A"
Boring Method : HSA
Rig Type : CME-550 ATV
Casing Diameter : 3.25" I.D.
Core Size : ----
Hammer : Automatic
Hammer Efficiency : 86.0
Driller/Inspector : JS/DW
Temperature : 45° F
Weather : Sunny

GROUNDWATER: ▽ Encountered at 19.0 feet ▽ At completion 14.9 feet ▽ ---- After ---- hours ▽ Caved in at 30.6 feet

Stratum Elevation	Sample Depth	SOIL/MATERIAL DESCRIPTION	Stratum Depth	Sample Number	SPT per 6"	SPT per 12" (N)	Recovery (%)	Moisture Content (%)	Total Unit Weight (pcf)	Unconfined Compression (ksf)	Atterberg Limits LL	PL	PI
935.2		ASPHALT CONCRETE (10") (Visual)	0.8										
933.5	2.5	SAND AND GRAVEL BASE (20") (Visual)	2.5	SS-1	16 14 8	22	100	4.3					
	5.0			SS-2	4 2 2	4	56	20.1					
	7.5	Brown, Moist, Soft to Stiff, CLAY LOAM A-6, As Lab 2		SS-3	4 5 6	11	100	10.9					
	10.0			SS-4	5 6 5	11	100	13.2					
	12.5			ST-1			100	10.8	144.4	5.909 ● 10.4%			
922.5			13.5										
	15.0	Brown and Gray, Moist, Medium Stiff to Very Stiff, LOAM A-4, As Lab 6		SS-5	4 5 5	10	100	8.9	144.3	6.566 ● 11.0%			
	17.5			ST-2			100						
917.5			18.5										
	20.0	Brown and Gray, Wet, Medium Dense, SAND (Visual)		SS-6	6 9 8	17	100	12.9					
	22.5												
912.5			23.5										
	25.0	Gray, Moist to Wet, Dense, SILT Heaving Sand and Gravel at 26 feet (Visual)		SS-7	9 16	39	100	17.4					

Continued on next page

CTL Engineering, Inc.
Phone: 317-295-8650

BORING METHOD	SAMPLING METHOD	ABBREVIATIONS
HSA – Hollow Stem Auger	SS – Split Spoon Sample	* – Hand Penetrometer
SFA – Solid Flight Auger	ST – Shelby Tube Sample	LL – Liquid Limit
RC – Rock Coring	CR – Rock Core Sample	PL – Plastic Limit
MD – Mud Drilling	BS – Bag Sample	PI – Plasticity Index
WD – Wash Drilling	AC – Auger Cuttings	SPT – Standard Penetration Test
HA – Hand Auger	SBS – Subbase Sample	

TEST BORING RECORD

CLIENT : Infrastructure Engineering, Inc
PROJECT : Culvert Replacement

BORING NO. : TB-2
SHEET : 2 OF 3

Stratum Elevation	Sample Depth	SOIL/MATERIAL DESCRIPTION	Stratum Depth	Sample Number	SPT per 6"	SPT per 12" (N)	Recovery (%)	Moisture Content (%)	Total Unit Weight (pcf)	Unconfined Compression (ksf)	Atterberg Limits LL	PL	PI
	27.5	Gray, Moist to Wet, Dense, SILT Heaving Sand and Gravel at 26 feet (Visual)			23								
907.0			29.0										
	30.0	Gray, Moist, Very Stiff, LOAM (TILL) A-4 (1), Lab 6		SS-8	10 11 14	25	100	10.3			21	14	8
904.0			32.0										
	32.5												
	35.0			SS-9	6 7 9	16	100	16.6					
	37.5	Brown and Gray, Wet, Medium Dense, SAND (Visual)											
	40.0			SS-10	6 8 6	14	100	11.0					
	42.5												
892.0			44.0										
	45.0			SS-11	6 9 13	22	100	9.4					
	47.5												
	50.0	Gray, Moist, Very Stiff to Hard, LOAM (TILL) with Traces of Sand in SS-12B Encountered Cobble in SS-15 A-4, As Lab 6		SS-12	10 16 21	37	89	11.5					
	52.5												
	55.0			SS-13	9 11 13	24	100	11.0					

Continued on next page

CTL Engineering, Inc.
Phone: 317-295-8650

BORING METHOD	SAMPLING METHOD	ABBREVIATIONS
HSA – Hollow Stem Auger	SS – Split Spoon Sample	* – Hand Penetrometer
SFA – Solid Flight Auger	ST – Shelby Tube Sample	LL – Liquid Limit
RC – Rock Coring	CR – Rock Core Sample	PL – Plastic Limit
MD – Mud Drilling	BS – Bag Sample	PI – Plasticity Index
WD – Wash Drilling	AC – Auger Cuttings	SPT – Standard Penetration Test
HA – Hand Auger	SBS – Subbase Sample	

TEST BORING RECORD

CLIENT : Infrastructure Engineering, Inc
PROJECT : Culvert Replacement

BORING NO. : TB-2
SHEET : 3 OF 3

Stratum Elevation	Sample Depth	SOIL/MATERIAL DESCRIPTION	Stratum Depth	Sample Number	SPT per 6"	SPT per 12" (N)	Recovery (%)	Moisture Content (%)	Total Unit Weight (pcf)	Unconfined Compression (ksf)	Atterberg Limits LL	PL	PI
	57.5												
	60.0			SS-14	24 19 24	43	100	14.1					
	62.5	Gray, Moist, Very Stiff to Hard, LOAM (TILL) with Traces of Sand in SS-12B											
	65.0	Encountered Cobble in SS-15 A-4, As Lab 6		SS-15	28 32 30	62	33	14.1					
	67.5												
866.0	70.0	Bottom of Boring at 70.0 feet	70.0	SS-16	38 32 38	70	22	14.1					
	72.5	Boring backfilled in accordance with INDOT requirements and pavement restored with concrete patch.											
	75.0												
	77.5												
	80.0												
	82.5												
	85.0												
	87.5												

CTL Engineering, Inc.
Phone: 317-295-8650

BORING METHOD	SAMPLING METHOD	ABBREVIATIONS
HSA – Hollow Stem Auger	SS – Split Spoon Sample	* – Hand Penetrometer
SFA – Solid Flight Auger	ST – Shelby Tube Sample	LL – Liquid Limit
RC – Rock Coring	CR – Rock Core Sample	PL – Plastic Limit
MD – Mud Drilling	BS – Bag Sample	PI – Plasticity Index
WD – Wash Drilling	AC – Auger Cuttings	SPT – Standard Penetration Test
HA – Hand Auger	SBS – Subbase Sample	

INFRASTRUCTURE ENGINEERING | INCORPORATED
201 South Capitol Avenue | Suite 490 | Indianapolis, IN 46225
P 317.243.9809 | F 317.243.9100 | www.infrastructure-eng.com

Last Update: Sep 02, 2020 - 10:33am
Drawing name: Q:\P-18\3722-00 - 206th Street Finley Creek (Hamilton Co)\DWG\Sheets\3722 - Soil Borings.dwg

NICHOLAS D. BERGMAN
REGISTERED
No. 10707534
STATE OF INDIANA
PROFESSIONAL ENGINEER

RECOMMENDED FOR APPROVAL — DESIGN ENGINEER — 09/07/2020 DATE

DESIGNED: EAS 09/2020 | DRAWN: EAS 09/2020
CHECKED: NDB 09/2020 | CHECKED: DTQ 09/2020

HAMILTON COUNTY, INDIANA

SOIL BORINGS

HORIZONTAL SCALE	BRIDGE FILE
AS NOTED	HAMILTON 311
VERTICAL SCALE	DESIGNATION
AS NOTED	
SURVEY BOOK	SHEET
	7 of 22
CONTRACT	PROJECT

STRUCTURE TO BE BUILT ON A 250' VERTICAL CURVE

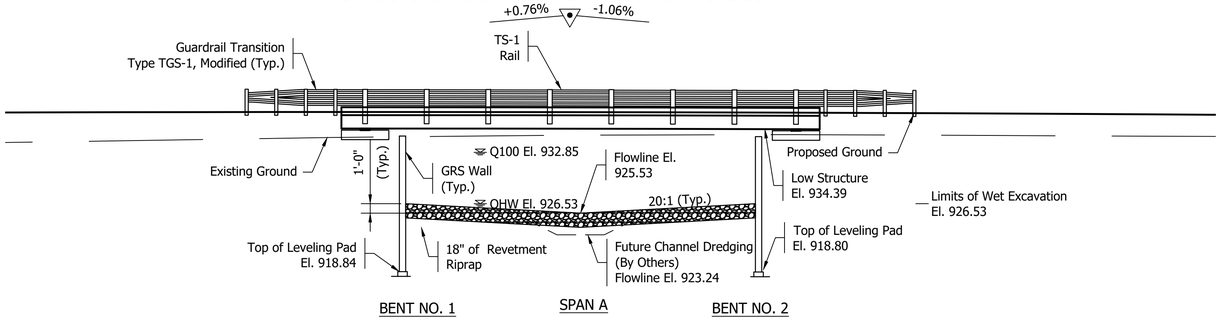

ELEVATION

Scale: ⅛" = 1'-0"

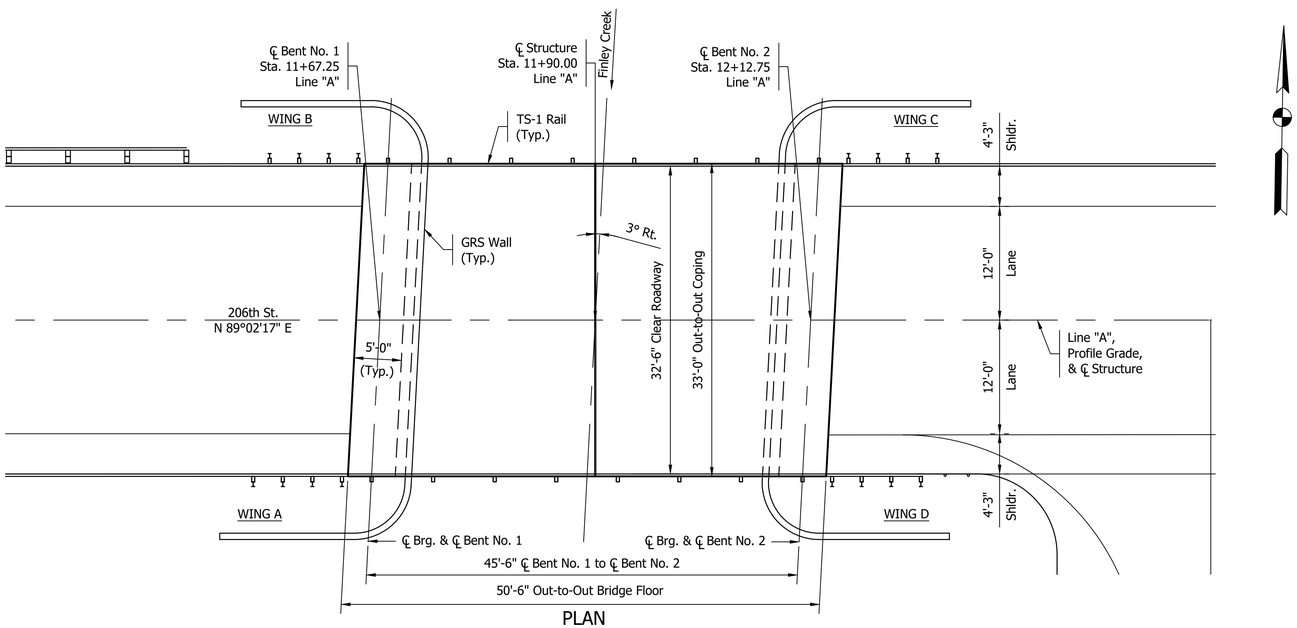

PLAN

Scale: ⅛" = 1'-0"

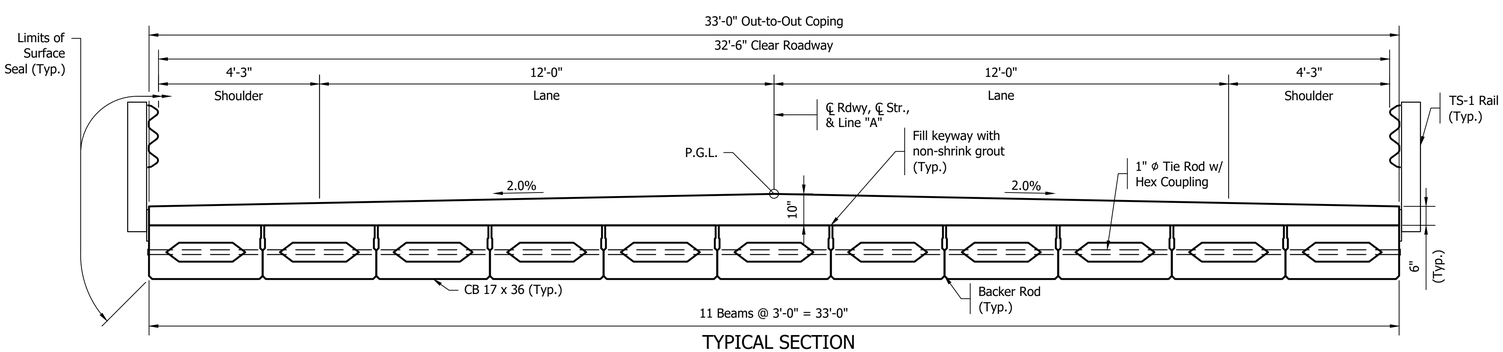

TYPICAL SECTION

Scale: ½" = 1'-0"

EXISTING STRUCTURE

Present structure is a twin barrel 72" diameter corrugated metal pipe and shall be removed.

GENERAL NOTES

Reinforcing steel covering shall be 2 ½ inches in the top and 1 inch minimum in the bottom of the floor slab, 3 inches in the footings except the bottom steel which shall be 4 inches and 2 inches in all other parts, unless noted.

Exposed faces of concrete bridge and transition railings, face of deck copings, and all exposed surfaces of wings are to surface sealed. The cost of labor, materials, equipment, and other incidentals necessary for the application of surface seal shall be included in the lump sum pay item, Surface Seal.

DESIGN DATA

LIVE LOAD
Superstructure and substructure designed for HL-93 loading, in accordance, with the AASHTO LRFD Bridge Design Specifications, Eighth Edition, 2017, and its subsequent interims.

DEAD LOAD
Actual dead load plus 35 pound per square foot for future wearing surface. Slab designed with ½ inch monolithic wearing surface.

FLOOR SLAB
Designed with a 5½" minimum structural depth plus ½" sacrificial wearing surface.

DESIGN STRESSES

CONCRETE

Class C	f'_c = 4000 psi
Class B	f'_c = 3000 psi
Class A	f'_c = 3500 psi
Prestressed Concrete	f'_c = 6000 psi @ 28 days
	Initial f'_c = 5000 psi @ release of strands

PRESTRESSING STRANDS
0.5" dia. 7 Wire Special LoLax Strands (A_s = 0.167 in^2)
Min. Tensile Strength = 270,000 psi
Initial Pull = 33,800 lbs. per strand

REINFORCING STEEL
Grade 60 fy = 60,000 psi
(Epoxy Coated, unless otherwise noted)

FINISHING MACHINE LOAD
4500 lbs distributed over 10 feet along the coping.

WIND LOAD
Designed for 70 mph horizontal wind loading in accordance with LRFD 3.8.1.

HYDRAULIC DATA

Waterway Opening Required	279.38	sq ft
Waterway Opening Provided	279.38	sq ft
Drainage Area	3.58	sq mi
Design Discharge, Q100	1400	cfs
Velocity	5.02	ft/s
Q100 Elev.	932.85	ft
Backwater at Q100	0.50	ft
Existing Waterway Opening	56.55	sq ft
Existing Backwater	1.69	ft
Low Structure Elev.	934.39	ft
Existing Low Structure Elev.	931.36	ft

COMPOSITE PRESTRESSED CONCRETE
BOX BEAM BRIDGE
1 SPAN: 45'-6"
33'-0" CLEAR ROADWAY; 3° SKEW RT.
206TH ST. OVER FINLEY CREEK
WASHINGTON TOWNSHIP

INFRASTRUCTURE ENGINEERING | INCORPORATED
201 South Capitol Avenue | Suite 490 | Indianapolis, IN 46225
P 317.243.5800 | F 317.243.5100 | www.infrastructure-eng.com

Last Update: Sep 09, 2020 - 8:37am
Drawing name: Q:\P-18\3722-00 - 206th Street Finley Creek (Hamilton Co)\DWG\Sheets\3722 - General Plan.dwg

NICHOLAS D. BERGMAN
REGISTERED
No. 10707534
STATE OF INDIANA
PROFESSIONAL ENGINEER

RECOMMENDED FOR APPROVAL	DESIGN ENGINEER	09/07/2020 DATE	
DESIGNED: EAS	09/2020	DRAWN: EAS	09/2020
CHECKED: NDB	09/2020	CHECKED: DTQ	09/2020

HAMILTON COUNTY, INDIANA

GENERAL PLAN

HORIZONTAL SCALE	BRIDGE FILE
AS NOTED	HAMILTON 311
VERTICAL SCALE	DESIGNATION
AS NOTED	
SURVEY BOOK	SHEET
	8 of 22
CONTRACT	PROJECT

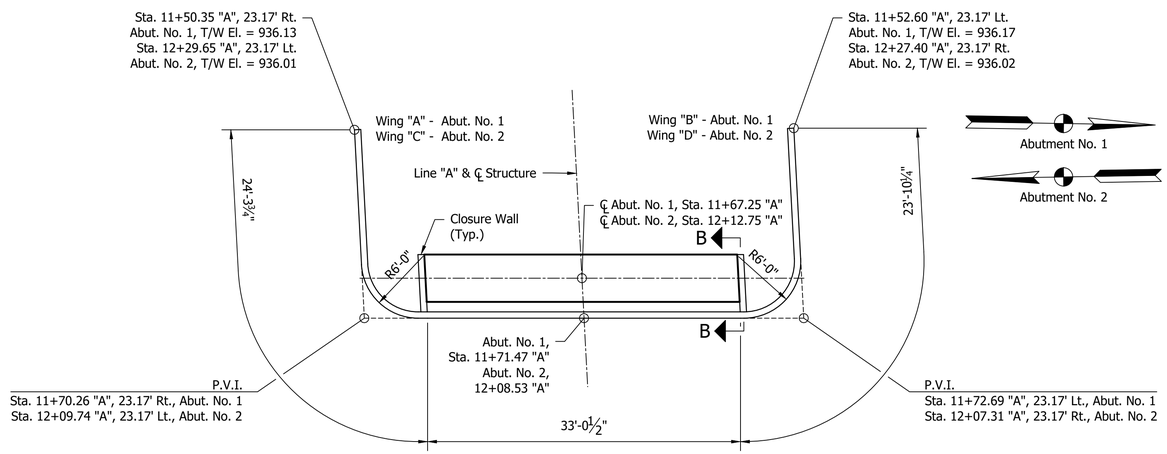

PLAN

Scale: ⅛" = 1'-0"

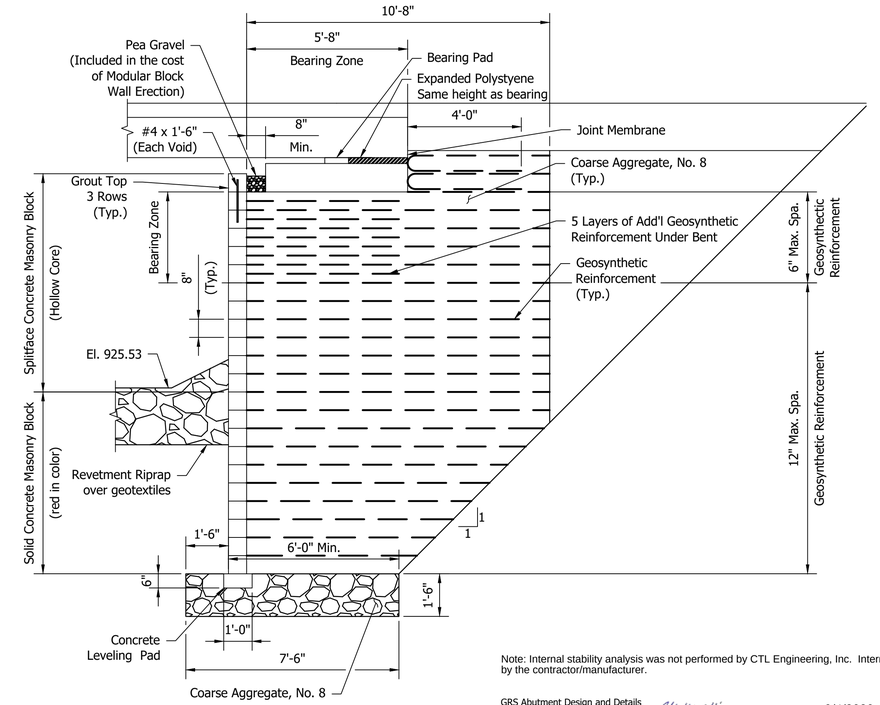

Note: Internal stability analysis was not performed by CTL Engineering, Inc. Internal stability shall be checked by the contractor/manufacturer.

GRS Abutment Design and Details are Recommended for Approval — Ali Kavali — 9/4/2020

DESIGN ENGINEER — DATE

CTL Engineering, Inc.

SECTION A-A

Scale: ⅜" = 1'-0"

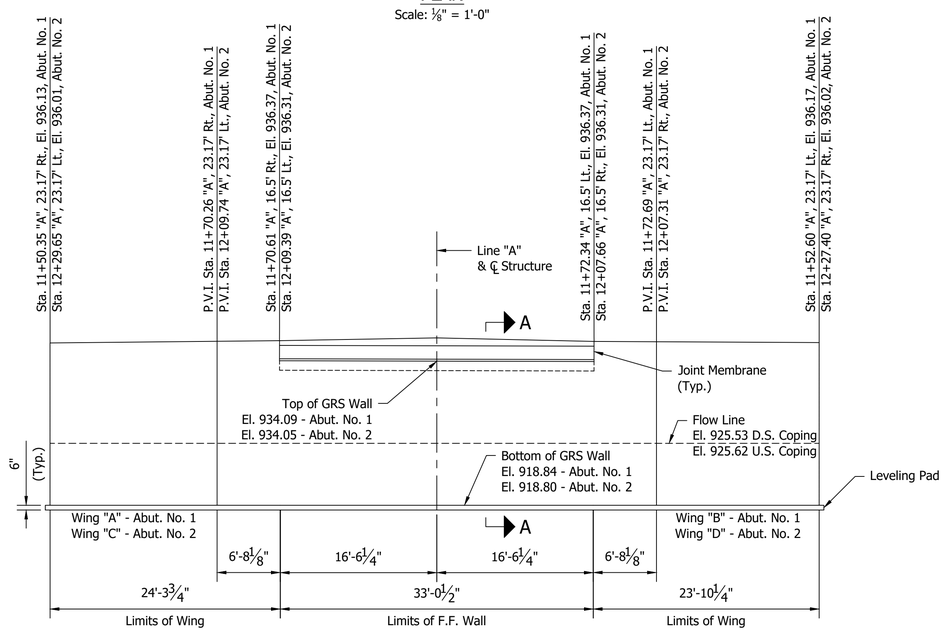

ELEVATION

Scale: ⅛" = 1'-0"

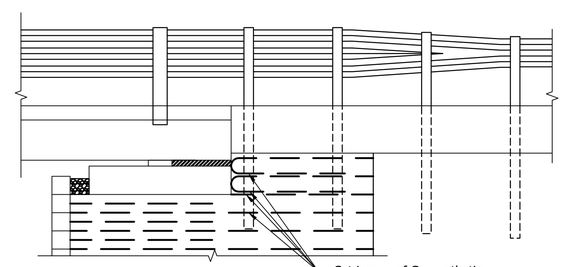

GRS AT GUARDRAIL POST DETAIL

Scale: ⅜" = 1'-0"

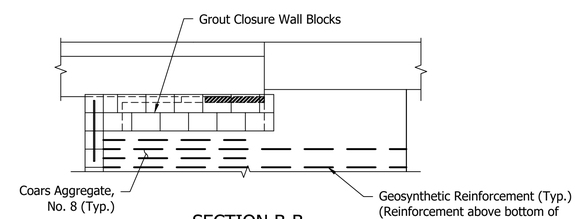

SECTION B-B

Scale: ⅜" = 1'-0"

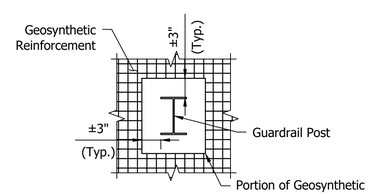

DETAIL A

Not to Scale

Approx. Locations of Guardrail Posts	
Station *	Offset *
11+60.1	17.3' Rt.
11+61.9	17.3' Lt.
11+63.3	17.3' Rt.
11+65.0	17.3' Lt.
12+15.0	17.3' Rt.
12+16.7	17.3' Lt.
12+18.1	17.3' Rt.
12+19.9	17.3' Lt.

* Contractor to field verify post locations prior to cutting the geosynthetic reinforcement and adjust as needed.

NOTE

1. Refer to next sheet for Bill of Material for GRS Wall and Joint Membrane Detail.

NICHOLAS D. BERGMAN — REGISTERED — No. 10707534 — STATE OF INDIANA — PROFESSIONAL ENGINEER

RECOMMENDED FOR APPROVAL — DESIGN ENGINEER — 09/07/2020 DATE

DESIGNED: EAS 09/2020 | DRAWN: EAS 09/2020

CHECKED: NDB 09/2020 | CHECKED: DTQ 09/2020

HAMILTON COUNTY, INDIANA

ABUTMENT DETAILS

HORIZONTAL SCALE	BRIDGE FILE
AS NOTED	HAMILTON 311
VERTICAL SCALE	DESIGNATION
AS NOTED	
SURVEY BOOK	SHEET
	9 of 22
CONTRACT	PROJECT

INFRASTRUCTURE ENGINEERING | INCORPORATED
201 South Capitol Avenue | Suite 490 | Indianapolis, IN 46225
P 317.243.5890 | F 317.243.5100 | www.infrastructure-eng.com

Last Update: Sep 03, 2020 - 2:44pm
Drawing name: Q:\P-18\3722-00 - 206th Street Finley Creek (Hamilton Co)\DWG\Sheets\3722 - Abutment Details.dwg

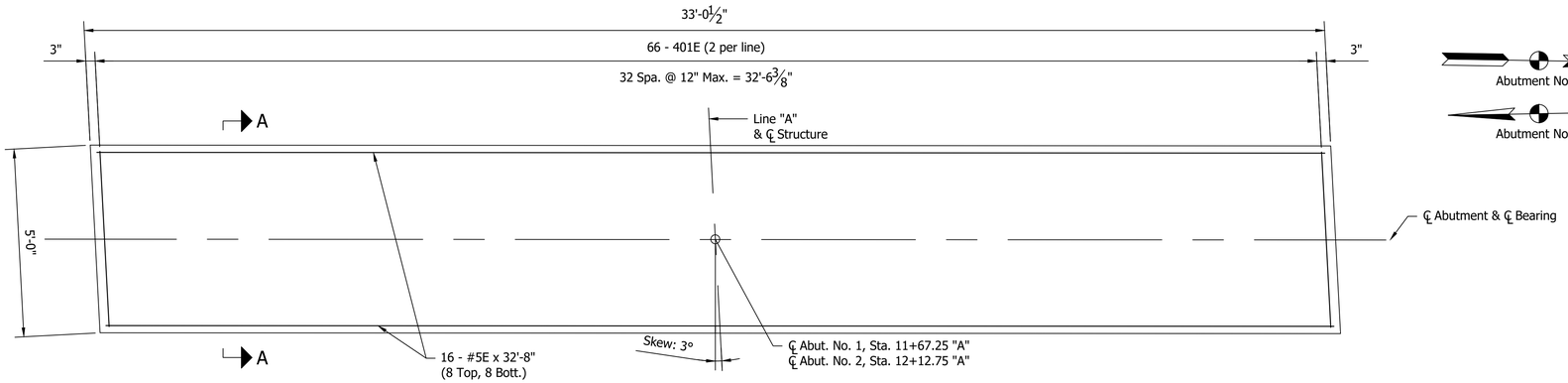

PLAN

Scale: ½" = 1'-0"

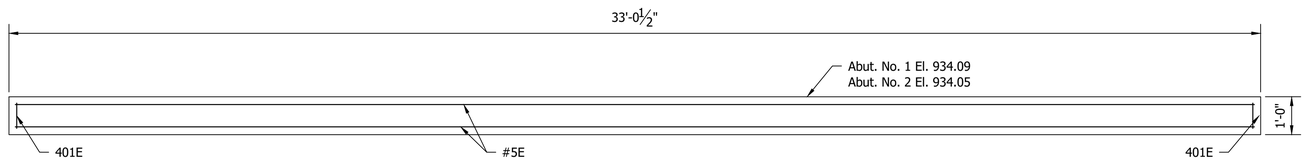

ELEVATION

Scale: ½" = 1'-0"

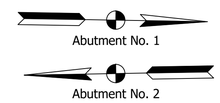

BILL OF MATERIALS SUBSTRUCTURE ABUTMENT NO. 1			
EPOXY COATED REINFORCING STEEL			
Size And Mark	No. of Bars	Length (ft. - in.)	Weight (lb.)
#5E	16	32'- 8"	
		Total # 5	545
401E	66	6'- 0"	
		Total # 4	265
TOTAL EPOXY COATED REINFORCING STEEL			810
CONCRETE			
Class A, Substructure			6.2 CYS
Leveling Pad, Concrete			81.2 LFT
GRS ABUTMENT			
Modular Block Wall Erection			1438.0 SFT
Modular Block Wall, Soild, Colored			494.8 SFT
Modular Block Wall, Split Face			943.2 SFT
Coarse Aggregate No. 8			309.6 CYS
High Strength Geotextile			2255.8 SFT

BILL OF MATERIALS SUBSTRUCTURE ABUTMENT NO. 2			
EPOXY COATED REINFORCING STEEL			
Size And Mark	No. of Bars	Length (ft. - in.)	Weight (lb.)
#5E	16	32'- 8"	
		Total # 5	545
401E	66	6'- 0"	
		Total # 4	265
TOTAL EPOXY COATED REINFORCING STEEL			810
CONCRETE			
Class A, Substructure			6.2 CYS
Leveling Pad, Concrete			81.2 LFT
GRS ABUTMENT			
Modular Block Wall Erection			1441.2 SFT
Modular Block Wall, Soild, Colored			549.6 SFT
Modular Block Wall, Split Face			891.6 SFT
Coarse Aggregate No. 8			327.0 CYS
High Strength Geotextile			2255.8 SFT

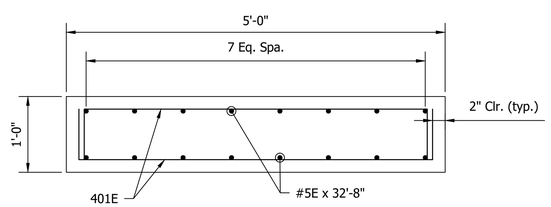

SECTION A-A

Scale: 1" = 1'-0"

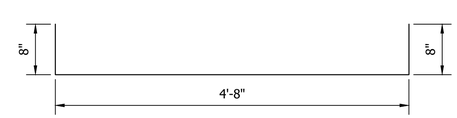

401E x 6'-0"

BAR BENDING DIAGRAM

Not to Scale

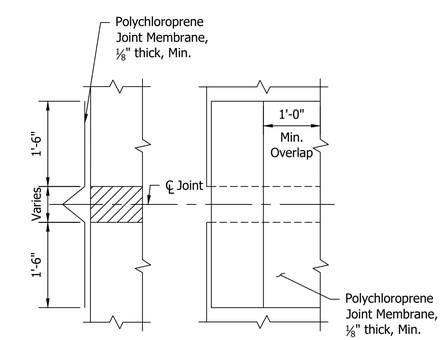

JOINT MEMBRANE DETAIL

Not to Scale

INFRASTRUCTURE ENGINEERING | INCORPORATED
201 South Capitol Avenue | Suite 490 | Indianapolis, IN 46225
P 317.243.5800 | F 317.243.5100 | www.infrastructure-eng.com

Last Update: Sep 04, 2020 - 11:58am
Drawing name: Q:\P-18\3722-00 - 206th Street Finley Creek (Hamilton Co)\DWG\Sheets\3722 - Substructure Detail.dwg

NICHOLAS D. BERGMAN REGISTERED No. 10707534 STATE OF INDIANA PROFESSIONAL ENGINEER

RECOMMENDED FOR APPROVAL — DESIGN ENGINEER — DATE 09/07/2020

DESIGNED: EAS 09/2019 | DRAWN: EAS 09/2020

CHECKED: NDB 09/2020 | CHECKED: DTQ 09/2020

HAMILTON COUNTY, INDIANA

ABUTMENT DETAILS

HORIZONTAL SCALE	BRIDGE FILE
AS NOTED	HAMILTON 311
VERTICAL SCALE	DESIGNATION
AS NOTED	
SURVEY BOOK	SHEET
	10 of 22
CONTRACT	PROJECT

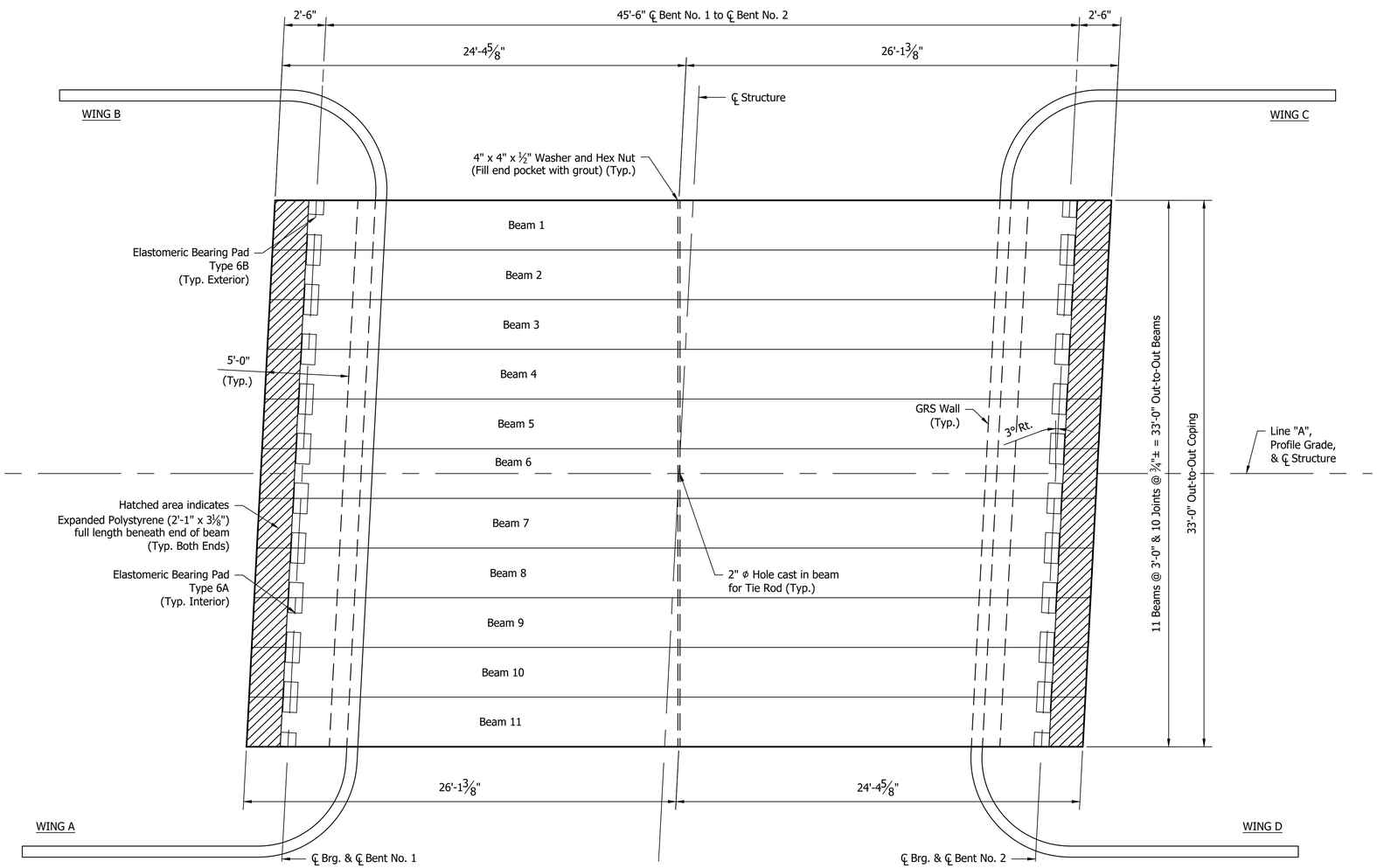

FRAMING PLAN

Scale: ¼" = 1'-0"

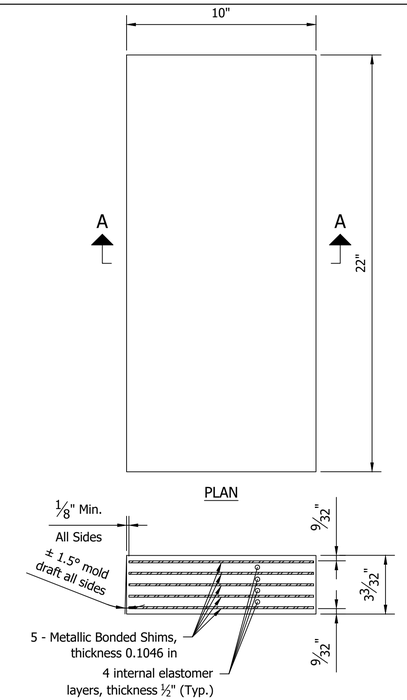

SECTION A-A

ELASTOMERIC BEARING PAD TYPE 6A

Scale: 3" = 1'-0"

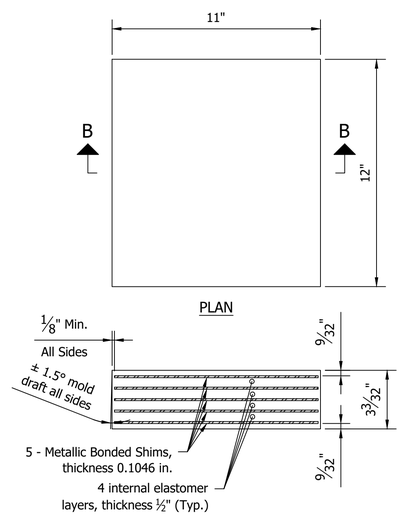

SECTION B-B

ELASTOMERIC BEARING PAD TYPE 6B

Scale: 3" = 1'-0"

NOTE

1. Elastomeric Bearing Pad Material to be 55 Durometer.

INFRASTRUCTURE ENGINEERING | INCORPORATED
201 South Capitol Avenue | Suite 490 | Indianapolis, IN 46225
P 317.243.5800 | F 317.243.5100 | www.infrastructure-eng.com

Last Update: Sep 02, 2020 - 1:42pm
Drawing name: Q:\P-18\3722-00 - 206th Street Finley Creek (Hamilton Co)\DWG\Sheets\3722 - Framing Plan.dwg

NICHOLAS D. BERGMAN
REGISTERED
No. 10707534
STATE OF INDIANA
PROFESSIONAL ENGINEER

RECOMMENDED FOR APPROVAL	DESIGN ENGINEER	09/07/2020 DATE	
DESIGNED: EAS	09/2020	DRAWN: EAS	09/2020
CHECKED: NDB	09/2020	CHECKED: DTQ	09/2020

HAMILTON COUNTY, INDIANA

FRAMING PLAN

HORIZONTAL SCALE	BRIDGE FILE
AS NOTED	HAMILTON 311
VERTICAL SCALE	DESIGNATION
AS NOTED	
SURVEY BOOK	SHEET
	11 of 22
CONTRACT	PROJECT

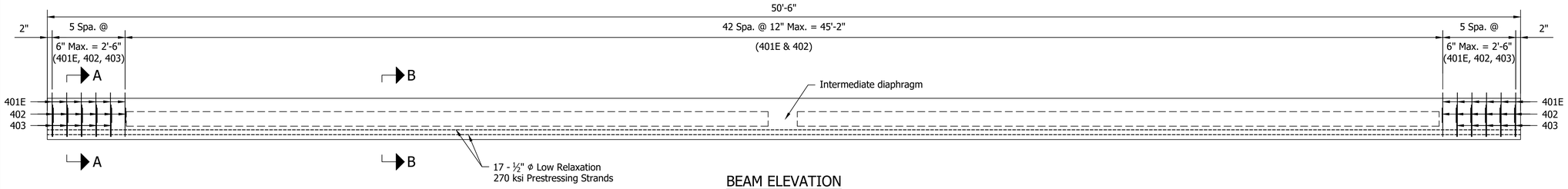

BEAM ELEVATION

Scale: ½" = 1'-0"

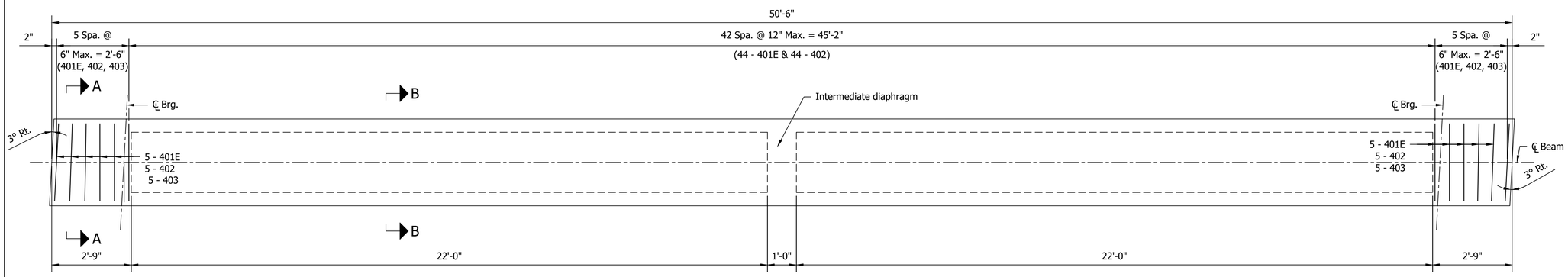

BEAM PLAN

Scale: ½" = 1'-0"

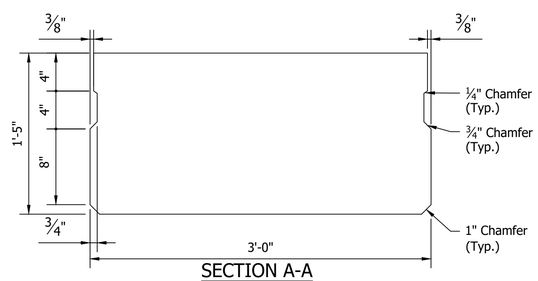

SECTION A-A

Typical Section At Ends of Beams
(Showing Beam Dimensions)

Scale: 1½" = 1'-0"

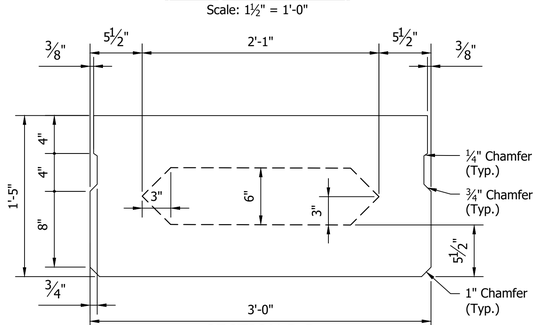

SECTION B-B

Typical Section Thru Beam
(Showing Beam Dimensions)

Scale: 1½" = 1'-0"

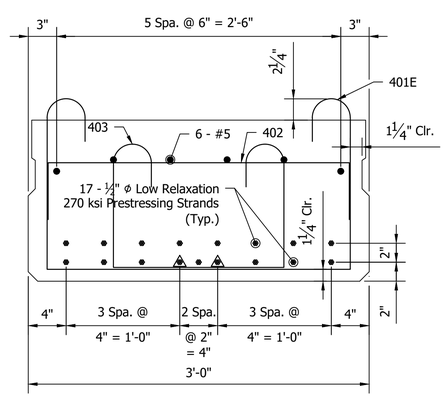

SECTION A-A

Typical Section at Ends of Beam
(Showing Reinforcement)

Scale: 1½" = 1'-0"

△ Debond Strand 4' from End of Beam

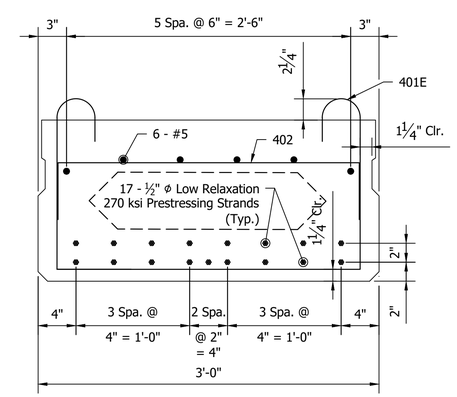

SECTION B-B

Typical Section Thru Beam
(Showing Reinforcement)

Scale: 1½" = 1'-0"

DESIGN DATA

Prestressing steel shall be ½" ϕ, A_s = 0.167 in^2 uncoated, special low relaxation, seven-wire strand, 270 ksi Initial pull per strand, 33.8 kips. For tolerances for fabrication of prestressed beams, see INDOT Std. Dwg. E707-BPBF-01 and E707-BPBF-04.
Concrete strength at 28 days, f'_c = 6,000 psi.
Concrete strength at release, f'_{ci} = 5,000 psi.

GENERAL NOTES - BEAMS

1. The beams are to be supported at bearing points while stored and while transporting to the job site.
2. Maximum distance from end of beam to pick up point is 3'-0".
3. Omit keyway on exterior face of exterior beam.
4. Beams shall be cast a minimum of 28 days before slab is poured.
5. The top of beams are to be scored transversely at ±3" centers with pointed tool.
6. Several lifting devices are Satisfactory. The type used must be guaranteed by the beam manufacturer and approved by the engineer on the shop drawings.
7. Sealer on outside face of exterior beam to be done by Fabricator in the shop.
8. Prior to tensioning the tie rods, spacers shall be placed between beams to maintain the joint width.
9. After the beams are set in their final position and tied transversely with roads as indicated on the plans, the longitudinal joints shall be thoroughly cleaned, a backer rod placed below the joints, and the joints filled with non-shrink grout.
10. All bars extending from the box beams into the concrete are to be epoxy coated.
11. Beam manufacturer to furnish Shop Drawings of Prestressed Box Beams for approval prior to fabrication as specified in the specifications.

DEFLECTIONS AT MIDSPAN

	CB 17 x 36 (All Beams)
Camber as Erected (+)	3⅜"
Dead Load Deflection (-)	1⁹⁄₁₆"
Residual Camber (+)	1¹³⁄₁₆"

Note:
The camber values as shown in the above table are expected values. If the actual camber as erected is different by ½" or more, the Contractor shall notify the Engineer immediately so that adjustments can be made.

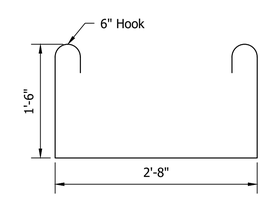

401E x 6'-8"

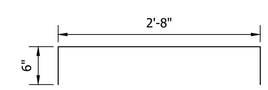

402 x 3'-8"

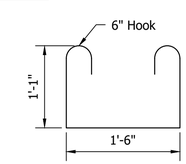

403 x 4'-8"

BAR BENDING DIAGRAM

Not to Scale

INFRASTRUCTURE ENGINEERING | INCORPORATED
201 South Capitol Avenue | Suite 490 | Indianapolis, IN 46225
P 317.243.3809 | F 317.243.9100 | www.infrastructure-eng.com

Last Update: Sep 01, 2020 - 4:11pm
Drawing name: Q:\P-18\3722-00 - 206th Street Finley Creek (Hamilton Co)\DWG\Sheets\3722 - Beam Details.dwg

NICHOLAS D. BERGMAN
REGISTERED
No. 10707534
STATE OF INDIANA
PROFESSIONAL ENGINEER

RECOMMENDED FOR APPROVAL — DESIGN ENGINEER — 09/07/2020 DATE

DESIGNED: EAS 09/2020 | DRAWN: EAS 09/2020
CHECKED: NDB 09/2020 | CHECKED: DTQ 09/2020

HAMILTON COUNTY, INDIANA

BEAM DETAILS

HORIZONTAL SCALE	BRIDGE FILE
AS NOTED	HAMILTON 311
VERTICAL SCALE	DESIGNATION
AS NOTED	
SURVEY BOOK	SHEET
	12 of 22
CONTRACT	PROJECT

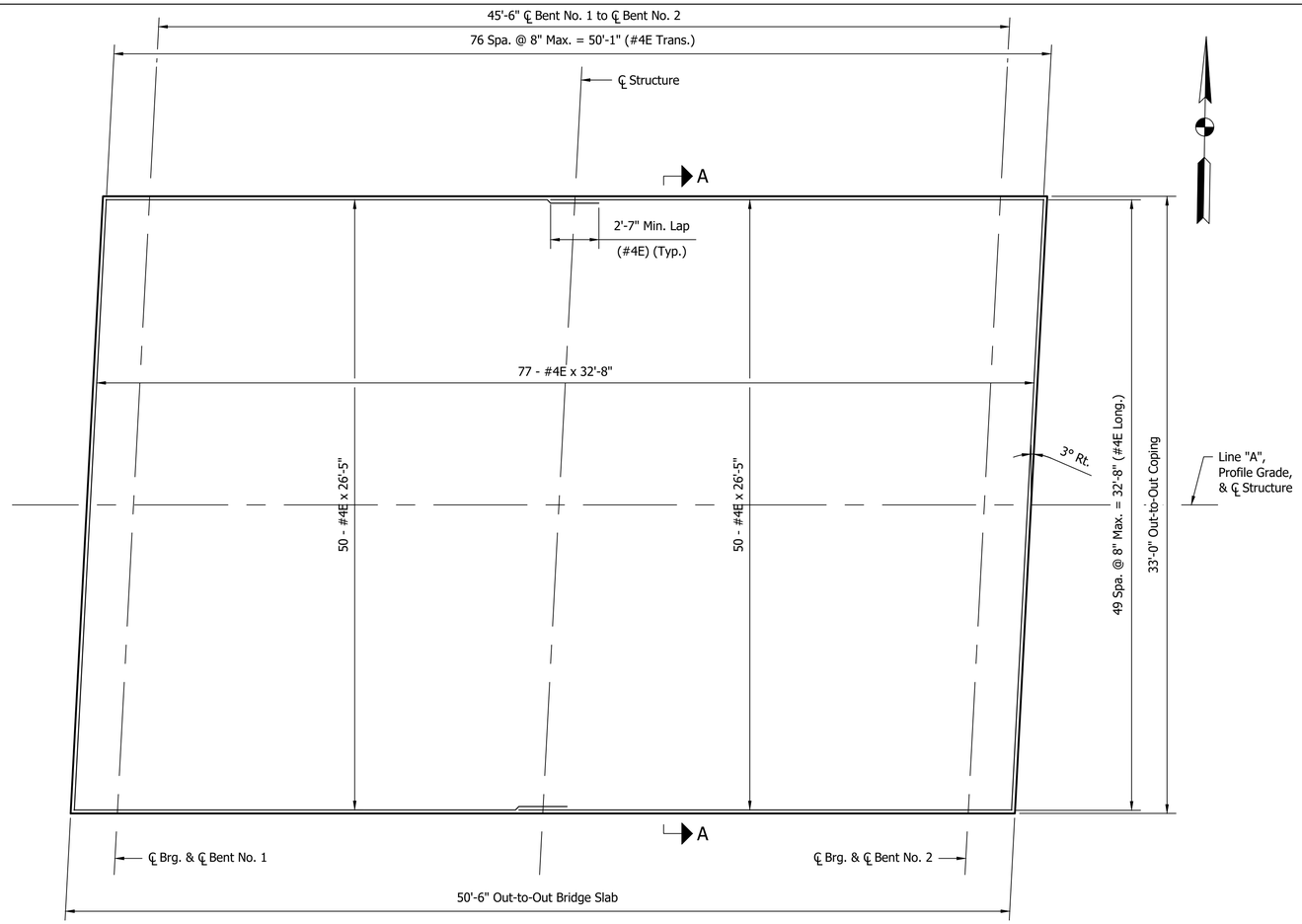

FLOOR PLAN

Scale: ¼" = 1'-0"

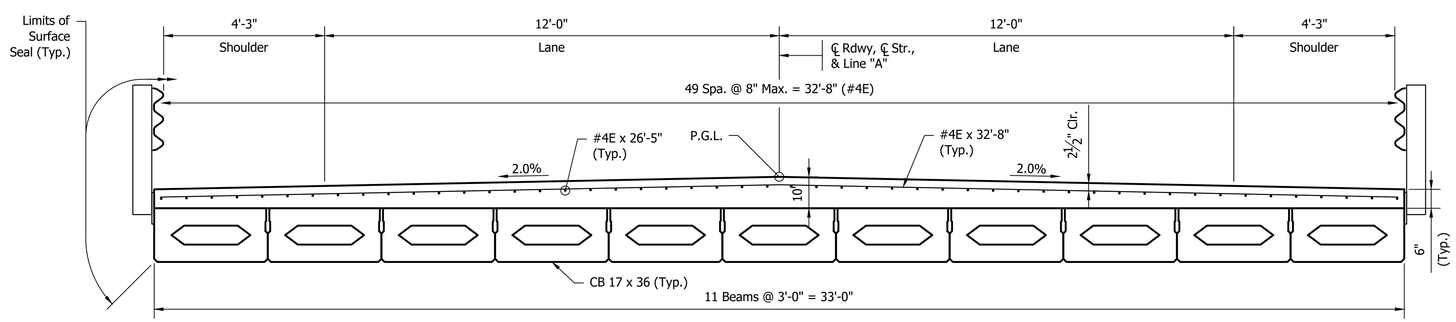

SECTION A-A

Scale: ½" = 1'-0"

BILL OF MATERIALS DECK			
EPOXY COATED REINFORCING STEEL			
Size And Mark	**No. of Bars**	**Length (ft. - in.)**	**Weight (lb.)**
#4E	77	32'- 8"	
#4E	100	26'- 5"	
		Total # 4	**3445**
		TOTAL EPOXY COATED REINFORCING STEEL	**3445**
CONCRETE			
Class C, Superstrucutre			**41.2 CYS**
MISCELLANEOUS			
Surface Seal			**1861 SFT**
Concrete Box Beam, 17 in. x 36 in.			**555.5 LFT**
Railing, Steel TS-1			**91 LFT**

INFRASTRUCTURE ENGINEERING | INCORPORATED
201 South Capitol Avenue | Suite 490 | Indianapolis, IN 46225
P 317.243.5800 | F 317.243.5900 | www.infrastructure-eng.com

Last Update: Sep 03, 2020 - 6:23am
Drawing name: Q:\P-18\3722-00 - 206th Street Finley Creek (Hamilton Co)\DWG\Sheets\3722 - Deck.dwg

NICHOLAS D. BERGMAN
REGISTERED
No. 10707534
STATE OF INDIANA
PROFESSIONAL ENGINEER

RECOMMENDED FOR APPROVAL — DESIGN ENGINEER — DATE 09/07/2020

DESIGNED: EAS 09/2019 | DRAWN: EAS 09/2020
CHECKED: NDB 09/2020 | CHECKED: DTQ 09/2020

HAMILTON COUNTY, INDIANA

SUPERSTRUCTURE DETAILS

HORIZONTAL SCALE	BRIDGE FILE
AS NOTED	HAMILTON 311
VERTICAL SCALE	DESIGNATION
AS NOTED	
SURVEY BOOK	SHEET
	13 of 22
CONTRACT	PROJECT

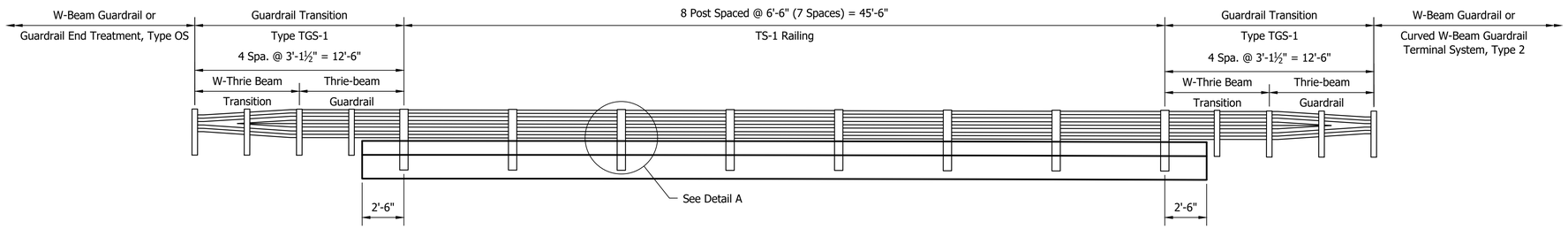

ELEVATION

Scale: ¼" = 1'-0"

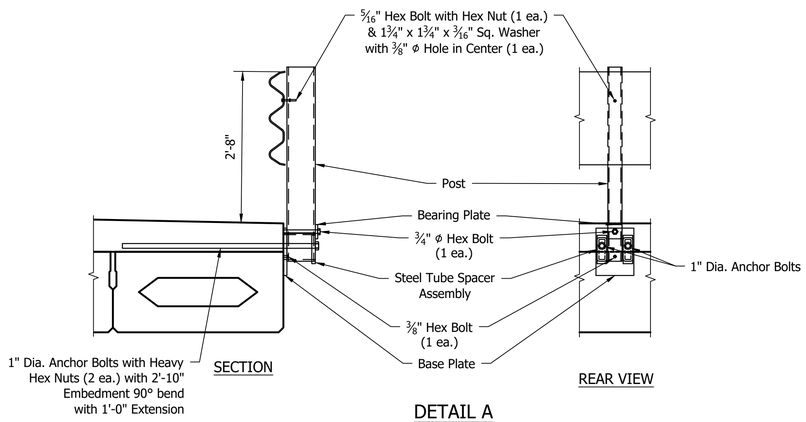

DETAIL A

Scale: ¾" = 1'-0"

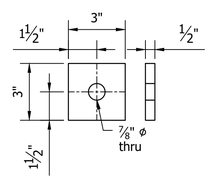

BEARING PLATE DETAIL

Scale: 3" = 1'-0"

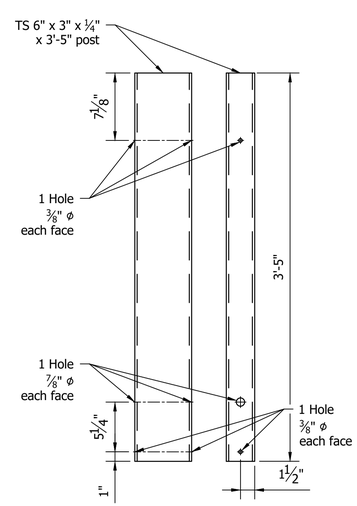

BRIDGE STEEL POST DETAIL

Scale: 1 ½" = 1'-0"

1. Two-⅝" x 2" std. button head bolts, with rectangular plate washers, round washers, and recess nuts through rail sections at each post
2. Twelve-⅝" x 2" std. button head bolts with round washers and recess nuts at 2 posts
3. Two-⅝" x 2" std. button head bolts with rectangular plate washers, round washers, and recess nuts at each post
4. One-⅝" x 1¼" std. button head bolt with rectangular plate washer, round washer, and recess nut at each post
5. Eight-⅝" x 1¼" std. button head bolts with round washers and recess nuts

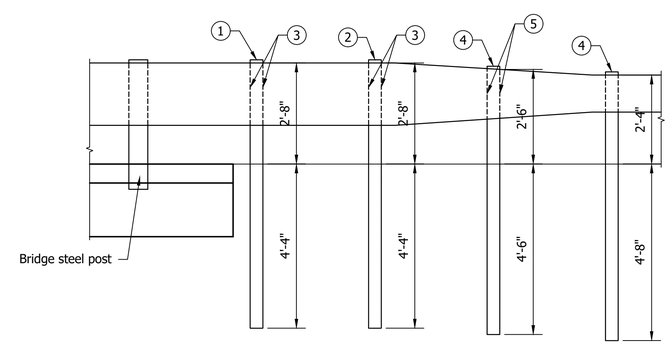

GUARDRAIL TRANSITION, TGS-1 MODIFIED

Scale: ½" = 1'-0"

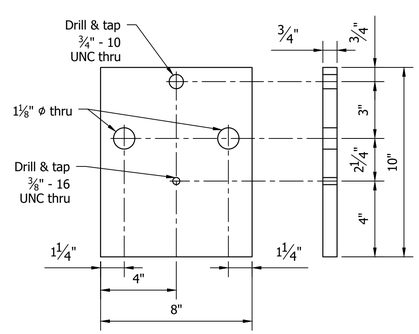

BASE PLATE DETAIL

Scale: 3" = 1'-0"

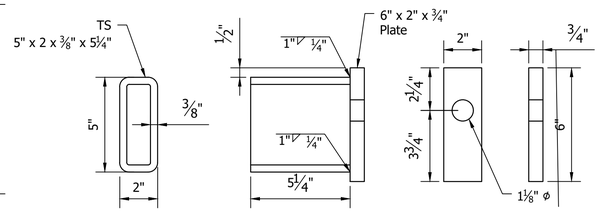

STEEL TUBE SPACER ASSEMBLY DETAIL

Scale: 3" = 1'-0"

INFRASTRUCTURE ENGINEERING | INCORPORATED
201 South Capitol Avenue | Suite 490 | Indianapolis, IN 46225
P 317.243.9800 | F 317.243.9100 | www.infrastructure-eng.com

Last Update: Sep 04, 2020 - 7:54am
Drawing name: Q:\P-18\3722-00 - 206th Street Finley Creek (Hamilton Co)\DWG\Sheets\3722 - Railing.dwg

NICHOLAS D. BERGMAN
REGISTERED
No. 10707534
STATE OF INDIANA
PROFESSIONAL ENGINEER

RECOMMENDED FOR APPROVAL	DESIGN ENGINEER	09/07/2020 DATE	
DESIGNED: EAS	09/2020	DRAWN: EAS	09/2020
CHECKED: NDB	09/2020	CHECKED: DTQ	09/2020

HAMILTON COUNTY, INDIANA

RAILING DETAILS

HORIZONTAL SCALE	BRIDGE FILE
AS NOTED	HAMILTON 311
VERTICAL SCALE	DESIGNATION
AS NOTED	
SURVEY BOOK	SHEET
	14 of 22
CONTRACT	PROJECT

SUMMARY OF BRIDGE QUANTITIES

ITEM	CONCRETE CLASS C SUPERSTR	CONCRETE CLASS A SUBSTR	CONCRETE CLASS B ABOVE FTG.	CONCRETE CLASS B IN FTG.	CONCRETE RAILING CLASS C	REINF. BARS	REINF. BARS, EPOXY COATED	RAILING, STEEL TS-1	LEVELING PAD, CONCRETE	MODULAR BLOCK WALL ERECTION	MODULAR BLOCK WALL, SOILD, COLORED	MODULAR BLOCK WALL, SPLIT FACE	HIGH STRENGTH GEOTEXTILE	PILES STEEL PIPE (SIZE)	PILES STEEL PIPE EPOXY COATED (SIZE)	PILES STEEL H (SIZE)	PILES STEEL H EPOXY COATED	PILES STEEL H REINF. CONC. ENCASED	PILES TEST PILE, DYNAMIC, PRODUCTION	PILES TEST PILE, DYNAMIC, RESTRICKE	PILES PILE SHOE (SIZE)	PILES PILE TIP STEEL H (SIZE)	PILES CORED HOLE IN ROCK		GRATES, BASINS, & FITTINGS, CAST IRON	COARSE AGGREGATE NO. 8	CONC. STR. MEMBERS BOX BEAM, 17 IN. X 36 IN.	CONC. STR. MEMBERS I-BEAM TYPE & SIZE	SURFACE SEAL **	
	CYS	CYS	CYS	CYS	CYS	LBS	LBS	LFT	LFT	SFT	SFT	SFT	SFT	LFT	LFT	LFT	LFT	LFT	LFT	EACH	EACH	EACH	NO.	LFT	LBS	CYS	LFT	LFT	SFT	
SUPERSTRUCTURE	41.2						3445	91																			555.5		1861	
SUBSTRUCTURE																														
Abutment No. 1		6.2					810		81.2	1438.0	494.8	943.2	2255.8													309.6				
Abutment No. 2		6.2					810		81.2	1441.2	549.6	891.6	2255.8													327.0				
TOTAL	**41.2**	**12.4**					**5065**	**91**	**162.4**	**2879.2**	**1044.4**	**1834.8**	**4511.6**													**636.6**	**555.5**		**1861**	

** Estimated quantity

PAVEMENT QUANTITIES AND APPROACH TABLE

LOCATION	DESCRIPTION (APPROACH TYPE OR CLASS)	WIDTH	LENGTH	RADII	DISTANCE BEYOND R/W LINE	SURFACE BEYOND R/W LINE			GRADE 1	GRADE 2	EXCAVATION CUT	EXCAVATION FILL	CLEAR ZONE AT DRIVE	HMA FOR APPROACHES SURFACE, TYPE B (LBS PER SYD 165)	HMA FOR APPROACHES INTERMEDIATE, TYPE B (LBS PER SYD 275)	HMA FOR ROADS QC/QA-HMA, 2, 64 SURFACE, 19.00 mm (LBS PER SYD 165)	HMA FOR ROADS QC/QA-HMA, 2, 64, INTERMEDIATE, 9.5 mm (LBS PER SYD 275)	HMA FOR ROADS QC/QA-HMA, 2, 64, BASE, 25.0 mm (LBS PER SYD 440)	ASPHALT FOR TACK COAT	COMPACTED AGGREGATE NO. 53 (DEPTH) 8 IN	COMPACTED AGGREGATE NO. 53 (DEPTH) 6 IN	JOINT ADHESIVE, SURFACE	JOINT ADHESIVE, INTERMEDIATE	LIQUID ASPHALT SEALANT	SUBGRADE TREATMENT, TYPE II	SUBGRADE TREATMENT, TYPE IC MODIFIED	GEOTEXTILES FOR SUBGRADE TYPE 2A	MILLING, ASPHALT, 1 1/2 IN.	REMARKS
		FT	FT	FT	FT	SYS	SYS	SYS	%	%	CYS	CYS	FT	TONS	TONS	TONS	TONS	TONS	SYS	TONS	TONS	LFT	LFT	LFT	SYS	SYS	SYS	SYS		
7+00 TO 7+50	MAINLINE															9.9	6.1	9.8	163.9	9.9		50		50		66.7		105.6		
7+50 TO 11+64.75	MAINLINE															91.3	152.0	243.3	2212.0	133.9		414.8	414.8	414.8		1290.3	1290.3			
12+15.25 TO 15+50	MAINLINE															73.7	122.8	196.4	1785.4	107.4		334.8	334.8	334.8		1041.4	1041.4			
15+50 TO 16+00	MAINLINE															9.9	6.1	9.8	163.9	9.9		50		50		66.7		105.6		
12+55	CLASS II	15	83	25										13.8	23.0				167.5		55.8				167.5					
TOTAL														**13.8**	**23.0**	**184.8**	**287.0**	**459.3**	**4492.7**	**261.1**	**55.8**	**849.6**	**749.6**	**849.6**	**167.5**	**2465.1**	**2331.7**	**211.2**		

MAILBOX APPROACHES

LT./RT.	C/L BOX STATION	DESCRIPTION	WIDTH, W(FT)	ASSEMBLY REQ'D SINGLE	ASSEMBLY REQ'D DOUBLE	
LT.	13+60			1		
		TOTAL		1		

R/W MARKER TABLE

STATION	OFFSET
06+58	17.5' Lt.
09+80	40' Lt.
12+80	40' Lt.
15+05	17.5' Lt.
16+00	17.5' Lt.
06+58	17.5' Rt.
09+80	40' Rt.
13+00	40' Rt.
15+25	17.5' Rt.
16+00	17.5' Rt.

GUARDRAIL SUMMARY TABLE

FROM STATION	TO STATION	LEFT	MEDIAN LEFT	MEDIAN RIGHT	RIGHT	STANDARD POST AT 6 FT 3 IN. SPA.	STANDARD POST AT 3 FT 1.5 IN. SPA.	DOUBLE FACED AT 6 FT 3 IN. SPA.	DOUBLE FACED AT 3 FT 1.5 IN. SPA.		SHOP CURVED AT ____ FT. SPA.	NESTING GUARDRAIL	GUARDRAIL FLARE RATE	GUARDRAIL TRANSITION TYPE TGS-1 MODIFIED	GUARDRAIL TRANSITION TYPE ____		GUARDRAIL END TREATMENT TYPE OS		CURVED W-BEAM GUARDRAIL SYSTEM TERMINAL SYSTEM	CURVED W-BEAM GUARDRAIL SYSTEM TERMINAL SYSTEM	CURVED W-BEAM GUARDRAIL SYSTEM CONNECTOR SYSTEM	CURVED W-BEAM GUARDRAIL SYSTEM CONNECTOR SYSTEM	GUARDRAIL REMOVE	GUARDRAIL RESET	IMPACT ATTENUATOR TYPE ___	IMPACT ATTENUATOR TYPE ___	REMARKS
						LFT	LFT	LFT	LFT	LFT	LFT	EACH		EACH	EACH		EACH		TYPE	EACH	TYPE	EACH	LFT	LFT	EACH	EACH	
10+51.39	11+63.89				X	50.00								1			1										
10+96.86	11+65.61	X				6.25								1			1										
11+62.97	12+21.36				X																		63				
11+39.31	12+38.82	X																					103				
12+11.51	13+38.76				X									1					2	1							
12+13.61	13+26.11	X				50.00								1			1										
TOTAL						**106.25**								**4**			**3**			**1**			**166**				

INFRASTRUCTURE ENGINEERING | INCORPORATED
201 South Capitol Avenue | Suite 490 | Indianapolis, IN 46225
P 317.243.5890 | F 317.243.9100 | www.infrastructure-eng.com

Last Update: Sep 04, 2020 - 12:10pm
Drawing name: Q:\P-18\3722-00 - 206th Street Finley Creek (Hamilton Co)\DWG\Sheets\3722 - Tables.dwg

NICHOLAS D. BERGMAN REGISTERED No. 10707534 STATE OF INDIANA PROFESSIONAL ENGINEER

RECOMMENDED FOR APPROVAL ____ DESIGN ENGINEER 09/07/2020 DATE

DESIGNED: EAS 09/2020 DRAWN: EAS 09/2020
CHECKED: NDB 09/2020 CHECKED: DTQ 09/2020

HAMILTON COUNTY, INDIANA

SUMMARY TABLES

HORIZONTAL SCALE	BRIDGE FILE
AS NOTED	HAMILTON 311
VERTICAL SCALE	DESIGNATION
AS NOTED	
SURVEY BOOK	SHEET
	15 of 22
CONTRACT	PROJECT

STRUCTURE DATA

STRUCTURE NUMBER	LOCATION: STATION	LOCATION: LEFT	LOCATION: CROSS	LOCATION: RIGHT	SIZE IN.	PIPE TYPE	MANHOLE, INLET, CATCH BASIN, OR SPECIALTY STRUCTURE AND TYPE	LENGTH LFT	SKEW	FLOW LINE: COVER FT	FLOW LINE: UP STREAM ELEV.	FLOW LINE: DOWN STREAM ELEV.	SERVICE LIFE YR	SITE DESIGNATION	pH	BACKFILL METHOD	STRUCTURE BACKFILL: TYPE	STRUCTURE BACKFILL: CYS	REVETMENT RIPRAP TONS	CONCRETE, CLASS A, FOR STR. CYS	VIDEO INSPECTION LFT	PIPE END SECTION EA.	GRATED BOX END SECTION: TYPE	GRATED BOX END SECTION: SLOPE	GRATED BOX END SECTION: EA.	SAFETY METAL END SECTION: TYPE	SAFETY METAL END SECTION: SLOPE	SAFETY METAL END SECTION: EA.		REMARKS
10	12+52.74			X	18	3	CULVERT	50	0	1.8	932.21	932.06	50		7	2	2	17.1				2								
101	10+40.00		X		24	1	CULVERT	74	0	2.1	931.21	930.88	50		7	1	1	79.3				2								
102	10+80.00		X		24	1	CULVERT	76	0	2.5	931.47	930.12	50		7	1	1	81.4				2								
103	11+20.00		X		24	1	CULVERT	76	0	2.2	931.58	931.28	50		7	1	1	81.4				2								

PIPE MATERIAL TABLE

	STRUCTURE NUMBER		10	101	102	103
	PIPE TYPE / SHAPE (CIR or DEF)		3 / CIR	1 / CIR	1 / CIR	1 / CIR
INT. DES.	SMOOTH PIPE SIZE		18	24	24	24
	CORRUGATED PIPE SIZE					
	SEMI-SMOOTH PIPE SIZE		18	24	24	24
CONC.	RCP/RCHEP (S)	CLASS	II	II	II	II
		D 0.01 RATING	1000	1000	1000	1000
	NON-REINFORCED CONCRETE PIPE, CLASS 3 (S)		OK	OK	OK	OK
PLASTIC PIPE	CORRUGATED PE PIPE, TYPE S (S)*			OK	OK	OK
	PROFILE WALL (RIBBED) PE PIPE (S)*			OK	OK	OK
	PROFILE WALL (CLOSED) PE PIPE (S)*			OK	OK	OK
	SMOOTH WALL PE PIPE (S)* / MAXIMUM DR			OK / 26	OK / 26	OK / 26
	CORRUGATED PP PIPE (S)			OK	OK	OK
	PROFILE WALL PVC PIPE (S)			OK	OK	OK
	SMOOTH WALL PVC PIPE (S)*			OK	OK	OK
CLAY	VITRIFIED CLAY PIPE, EXTRA STRENGTH (S)		OK	OK	OK	OK
CORRUGATED STEEL PIPE / PIPE-ARCH	FULLY BIT. PAVED & LINED (S)	CORR.PROFILE				
		THICKNESS				
	ZINC COATED (C)	CORR. PROFILE				
		THICKNESS				
	ZINC COATED W/ BPI (C)	CORR. PROFILE				
		THICKNESS				
	ALUM. COATED TYPE 2 (C)	CORR. PROFILE				
		THICKNESS				
	POLYMER PRECOATED GALVANIZED (C)	CORR. PROFILE				
		THICKNESS				
	POLYMER PRECOATED GALVANIZED CORRUGATED STEEL PIPE TYPE 1A (S)	CORR. PROFILE				
		THICKNESS				
COR. ALUM. PIPE/ P-ARCH	CORRUGATED ALUM. ALLOY (C)	CORR. PROFILE				
		THICKNESS				
	CORRUGATED ALUM. ALLOY W/ BPI (C)	CORR. PROFILE				
		THICKNESS				
SPIRAL RIB STEEL PIPE	ZINC COATED (SS)	RIB PROFILE	3/4" x 3/4" x 7 1/2"	3/4" x 3/4" x 7 1/2"	3/4" x 3/4" x 7 1/2"	3/4" x 3/4" x 7 1/2"
		THICKNESS	0.1090	0.1090	0.1090	0.1090
	ZINC COATED W/ BPI (SS)	RIB PROFILE	3/4" x 3/4" x 7 1/2"	3/4" x 3/4" x 7 1/2"	3/4" x 3/4" x 7 1/2"	3/4" x 3/4" x 7 1/2"
		THICKNESS	0.0640	0.0640	0.0640	0.0640
	ALUM. COATED TYPE 2 (SS)	RIB PROFILE	3/4" x 3/4" x 7 1/2"	3/4" x 3/4" x 7 1/2"	3/4" x 3/4" x 7 1/2"	3/4" x 3/4" x 7 1/2"
		THICKNESS	0.0640	0.0640	0.0640	0.0640
	POLYMER PRECOATED GALVANIZED (SS)	RIB PROFILE	3/4" x 3/4" x 7 1/2"	3/4" x 3/4" x 7 1/2"	3/4" x 3/4" x 7 1/2"	3/4" x 3/4" x 7 1/2"
		THICKNESS	0.0640	0.0640	0.0640	0.0640
STRUCTURAL PLATE PIPE / PIPE-ARCH	STR. PLATE ALUMINUM ALLOY (C)	CORR. PROFILE				
		THICKNESS				
	STR. PLATE ALUMINUM ALLOY W/ CFP (C)	CORR. PROFILE				
		THICKNESS				
	STR. PLATE STEEL (C)	CORR. PROFILE				
		THICKNESS **				
	STR. PLATE STEEL W/ CFP (C)	CORR. PROFILE				
		THICKNESS **				

PAVEMENT MARKINGS SUMMARY OF QUANTITIES

LOCATION	LINE PAINT: SOLID WHITE 4 in	LINE PAINT: SOLID YELLOW 4 in	LINE PAINT: BROKEN YELLOW 4 in	LINE EPOXY: SOLID WHITE 4 in	LINE EPOXY: SOLID YELLOW 4 in	LINE EPOXY: SOLID WHITE 8 in	LINE EPOXY: SOLID YELLOW 8 in	LINE EPOXY: BROKEN WHITE 4 in	LINE EPOXY: BROKEN YELLOW 4 in	LINE EPOXY: BROKEN WHITE 8 in	LINE EPOXY: BROKEN YELLOW 8 in	TRANSVERSE MARKINGS THERMOPLASTIC STOP LINE: SOLID WHITE 12 in	TRANSVERSE MARKINGS THERMOPLASTIC STOP LINE: SOLID WHITE 24 in	TRANSVERSE MARKINGS CROSSHATCH LINE: SOLID YELLOW 24 in	TRANSVERSE MARKINGS CROSSHATCH LINE: SOLID YELLOW 24 in	TRANSVERSE MARKINGS CROSSWALK LINE: SOLID WHITE 4 in	TRANSVERSE MARKINGS CROSSWALK LINE: SOLID WHITE 8 in	PAVEMENT MESSAGE THERMOPLASTIC LANE INDICATION ARROW	PAVEMENT MESSAGE THERMOPLASTIC WORD "ONLY"	SNOWPLOWABLE RAISED PAVEMENT MARKERS
	ft	ft	ft	ft	ft	ft	ft	ft	ft	ft	ft	ft	ft	ft	ft	ft	ft	EACH	EACH	EACH
7+00 TO 12+11.50	1,023.0	511.5	127.9																	
12+11.50 TO 16+00	777.0		97.1																	
TOTAL	**1,800.0**	**511.5**	**225.0**																	

INFRASTRUCTURE ENGINEERING | INCORPORATED
201 South Capitol Avenue | Suite 490 | Indianapolis, IN 46225
P 317.243.8890 | F 317.243.9100 | www.infrastructure-eng.com

Last Update: Sep 04, 2020 - 12:10pm
Drawing name: Q:\P-18\3722-00 - 206th Street Finley Creek (Hamilton Co)\DWG\Sheets\3722 - Tables.dwg

NICHOLAS D. BERGMAN REGISTERED No. 10707534 STATE OF INDIANA PROFESSIONAL ENGINEER

RECOMMENDED FOR APPROVAL — DESIGN ENGINEER — 09/07/2020 DATE

DESIGNED: EAS 09/2020 | DRAWN: EAS 09/2020
CHECKED: NDB 09/2020 | CHECKED: DTQ 09/2020

HAMILTON COUNTY, INDIANA

SUMMARY TABLES

HORIZONTAL SCALE	BRIDGE FILE
AS NOTED	HAMILTON 311
VERTICAL SCALE	DESIGNATION
AS NOTED	
SURVEY BOOK	SHEET
	16 of 22
CONTRACT	PROJECT

INFRASTRUCTURE
ENGINEERING | INCORPORATED
201 South Capitol Avenue | Suite 490 | Indianapolis, IN 46225
P 317.243.5800 | F 317.243.5100 | www.infrastructure-eng.com

BEGIN PROJECT
7+50.00

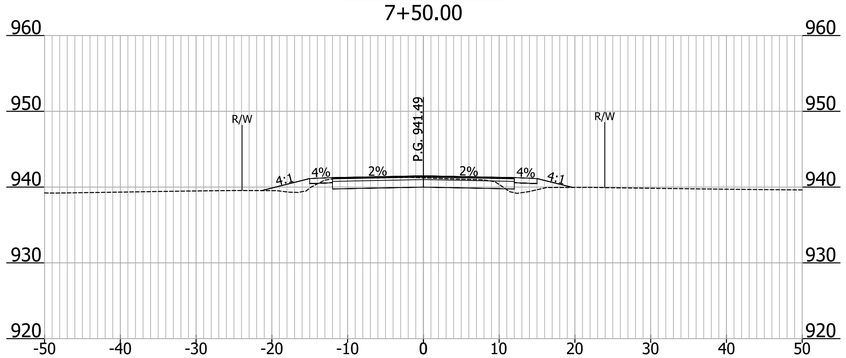

EARTHWORK QUANTITIES			
TYPE	AREA (SF)	VOLUME (CY)	CUM VOL (CY)
CUT	17.29	1.67	6.09
FILL	13.77	2.73	12.39

8+50.00

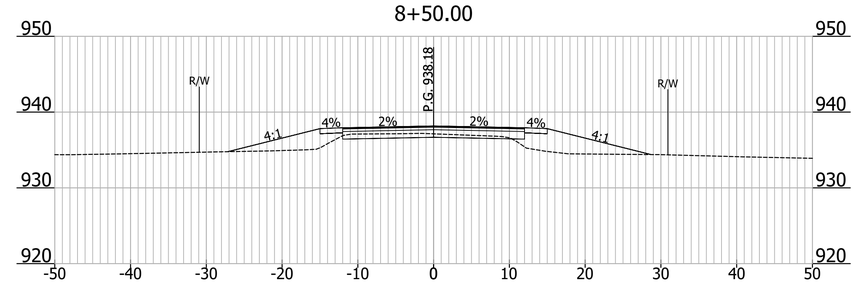

EARTHWORK QUANTITIES			
TYPE	AREA (SF)	VOLUME (CY)	CUM VOL (CY)
CUT	10.41	2.01	73.79
FILL	49.57	9.05	128.81

BEGIN INCIDENTAL CONSTRUCTION
7+00.00

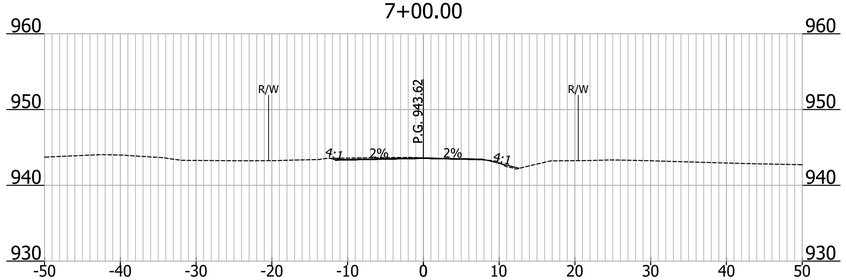

EARTHWORK QUANTITIES			
TYPE	AREA (SF)	VOLUME (CY)	CUM VOL (CY)
CUT	3.06	0.28	0.28
FILL	0.43	0.04	0.04

8+00.00

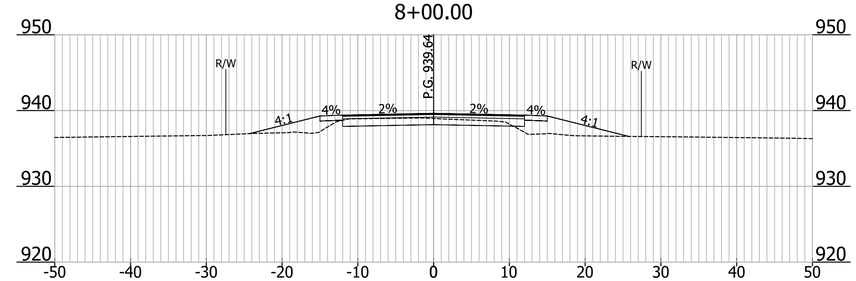

EARTHWORK QUANTITIES			
TYPE	AREA (SF)	VOLUME (CY)	CUM VOL (CY)
CUT	18.09	3.41	47.31
FILL	30.85	5.61	52.73

DESIGNED: EAS 06/2019	DRAWN: EAS 06/2019	HAMILTON COUNTY, INDIANA	HORIZONTAL SCALE: N/A; VERTICAL SCALE: N/A; BRIDGE FILE: HAMILTON 311; DESIGNATION
CHECKED: NDB 06/2019	CHECKED: DTQ 06/2019	CROSS SECTIONS LINE "A"	SURVEY BOOK; CONTRACT; SHEET 17 of 22; PROJECT

INFRASTRUCTURE ENGINEERING | INCORPORATED
201 South Capitol Avenue | Suite 490 | Indianapolis, IN 46225
P 317.243.5800 | F 317.243.5100 | www.infrastructure-eng.com

9+50.00

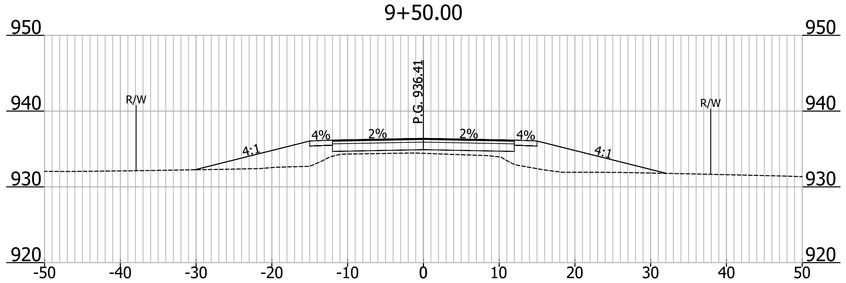

10+40.00

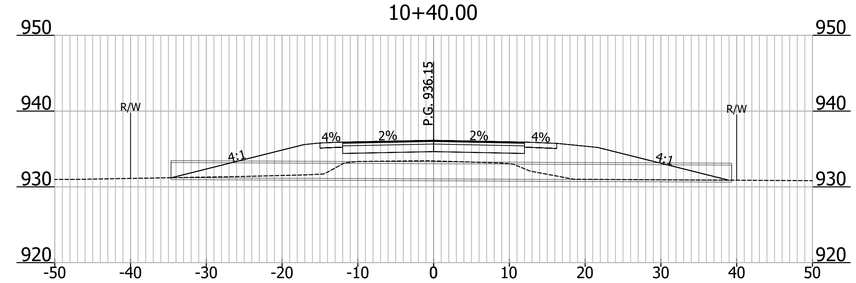

EARTHWORK QUANTITIES			
TYPE	AREA (SF)	VOLUME (CY)	CUM VOL (CY)
CUT	0.00	0.00	85.10
FILL	87.33	15.95	369.77

9+00.00

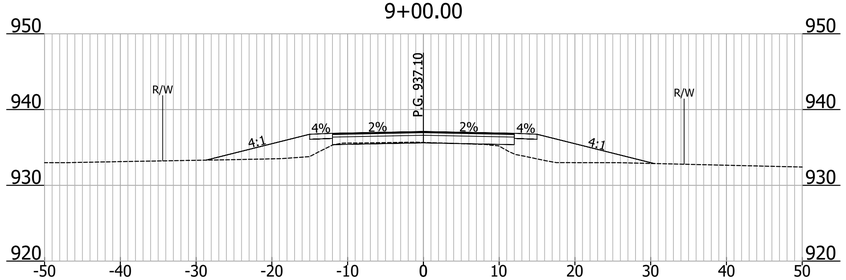

10+00.00

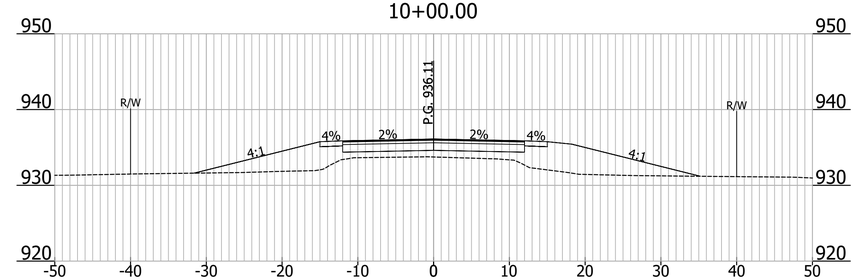

EARTHWORK QUANTITIES			
TYPE	AREA (SF)	VOLUME (CY)	CUM VOL (CY)
CUT	1.64	0.38	84.70
FILL	62.55	11.46	232.82

EARTHWORK QUANTITIES			
TYPE	AREA (SF)	VOLUME (CY)	CUM VOL (CY)
CUT	0.00	0.00	85.10
FILL	115.62	21.10	555.93

HAMILTON COUNTY, INDIANA

CROSS SECTIONS
LINE "A"

DESIGNED: EAS 06/2019 DRAWN: EAS 06/2019
CHECKED: NDB 06/2019 CHECKED: DTQ 06/2019

HORIZONTAL SCALE	BRIDGE FILE
N/A	HAMILTON 311
VERTICAL SCALE	DESIGNATION
N/A	
SURVEY BOOK	SHEET
	18 of 22
CONTRACT	PROJECT

INFRASTRUCTURE
ENGINEERING | INCORPORATED
201 South Capitol Avenue | Suite 490 | Indianapolis, IN 46225
P 317.243.5890 | F 317.243.5100 | www.infrastructure-eng.com

10+80.00

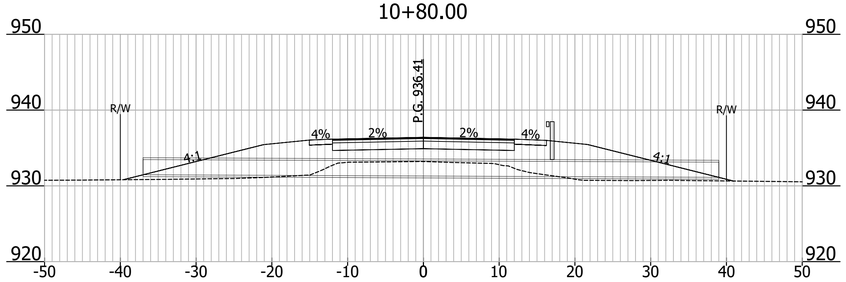

11+20.00

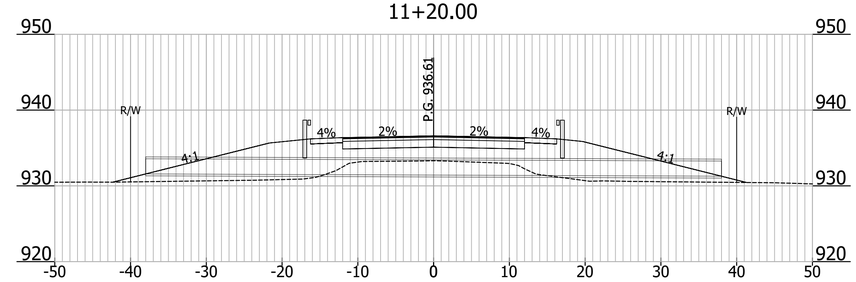

10+50.00

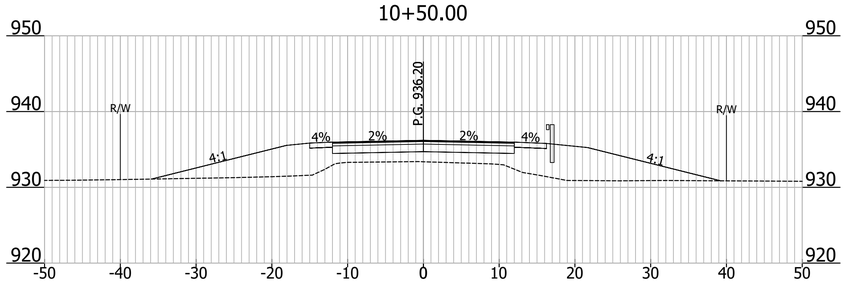

EARTHWORK QUANTITIES			
TYPE	AREA (SF)	VOLUME (CY)	CUM VOL (CY)
CUT	0.00	0.00	85.10
FILL	168.17	30.60	815.58

11+00.00

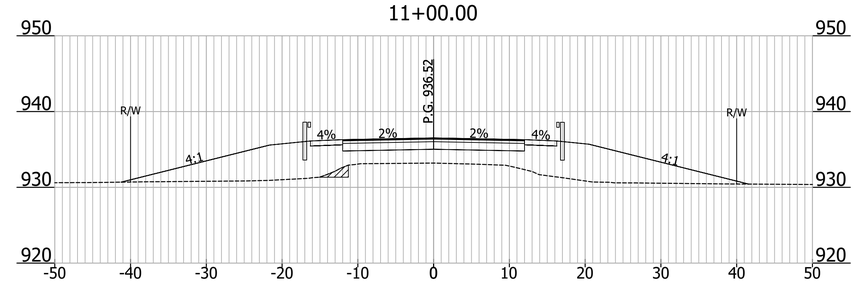

EARTHWORK QUANTITIES			
TYPE	AREA (SF)	VOLUME (CY)	CUM VOL (CY)
CUT	0.00	0.00	85.10
FILL	222.11	41.01	1183.84

NOTE
Hatched areas indicate benching required.

DESIGNED: EAS 06/2019	DRAWN: EAS 06/2019	HAMILTON COUNTY, INDIANA	HORIZONTAL SCALE: N/A; VERTICAL SCALE: N/A; BRIDGE FILE: HAMILTON 311; DESIGNATION:
CHECKED: NDB 06/2019	CHECKED: DTQ 06/2019	CROSS SECTIONS LINE "A"	SURVEY BOOK: ; CONTRACT: ; SHEET: 19 of 22; PROJECT:

INFRASTRUCTURE ENGINEERING | INCORPORATED
201 South Capitol Avenue | Suite 490 | Indianapolis, IN 46225
P 317.243.5800 | F 317.243.5100 | www.infrastructure-eng.com

12+00.00

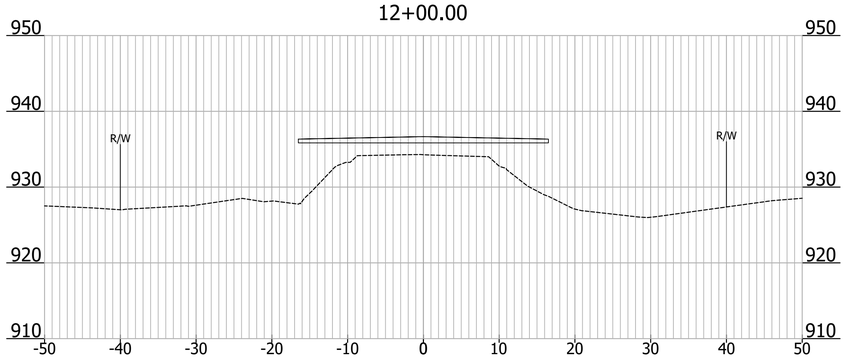

EARTHWORK QUANTITIES			
TYPE	AREA (SF)	VOLUME (CY)	CUM VOL (CY)
CUT	0.00	0.00	85.10
FILL	80.07	17.64	1834.79

13+00.00

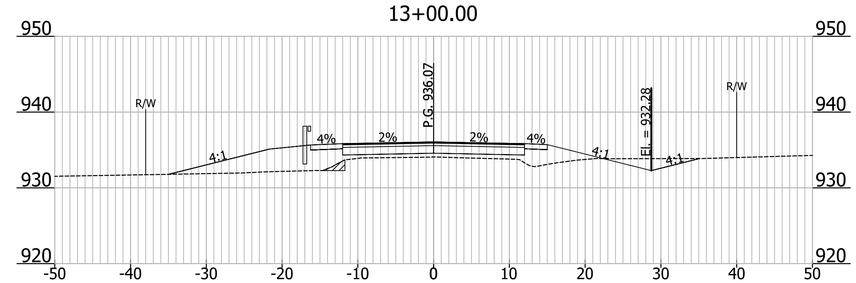

EARTHWORK QUANTITIES			
TYPE	AREA (SF)	VOLUME (CY)	CUM VOL (CY)
CUT	11.21	1.84	98.65
FILL	72.53	13.89	2238.51

11+50.00

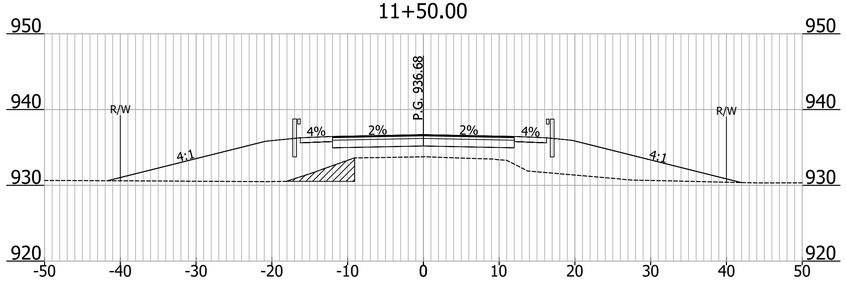

BEGIN STRUCTURE STA. 11+67.25 "A"

EARTHWORK QUANTITIES			
TYPE	AREA (SF)	VOLUME (CY)	CUM VOL (CY)
CUT	0.00	0.00	85.10
FILL	218.99	40.77	1602.10

12+50.00

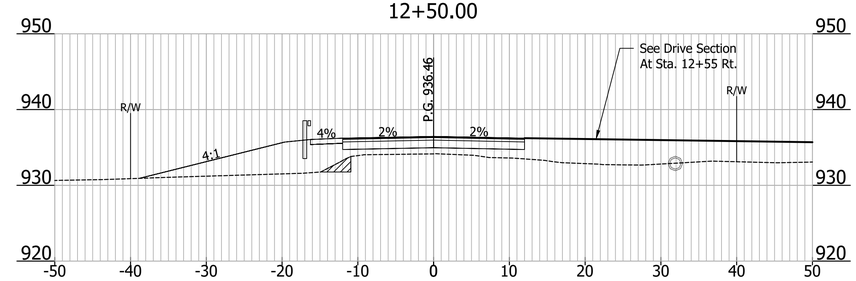

END STRUCTURE STA. 12+12.75 "A"

EARTHWORK QUANTITIES			
TYPE	AREA (SF)	VOLUME (CY)	CUM VOL (CY)
CUT	0.00	0.20	86.30
FILL	90.15	19.00	2068.87

NOTE
Hatched areas indicate benching required.

DESIGNED: EAS 06/2019	DRAWN: EAS 06/2019	HAMILTON COUNTY, INDIANA	HORIZONTAL SCALE: N/A; VERTICAL SCALE: N/A; BRIDGE FILE: HAMILTON 311; DESIGNATION:
CHECKED: NDB 06/2019	CHECKED: DTQ 06/2019	CROSS SECTIONS LINE "A"	SURVEY BOOK: ; CONTRACT: ; SHEET 20 of 22; PROJECT:

INFRASTRUCTURE
ENGINEERING | INCORPORATED
201 South Capitol Avenue | Suite 490 | Indianapolis, IN 46225
P 317.243.5800 | F 317.243.5100 | www.infrastructure-eng.com

14+00.00

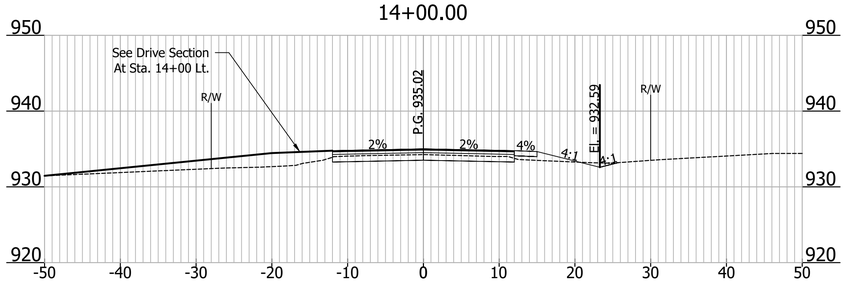

EARTHWORK QUANTITIES			
TYPE	AREA (SF)	VOLUME (CY)	CUM VOL (CY)
CUT	18.75	3.38	148.71
FILL	4.67	2.18	2393.00

15+00.00

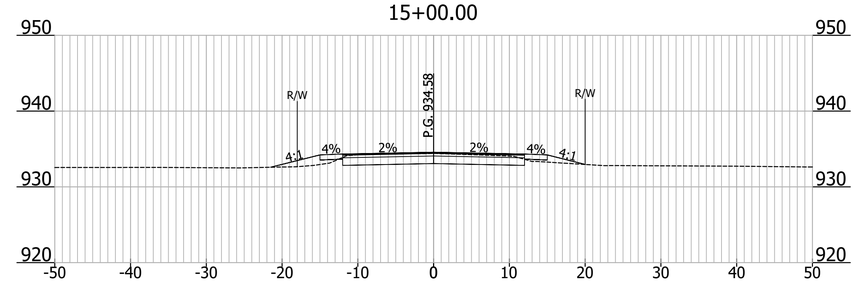

EARTHWORK QUANTITIES			
TYPE	AREA (SF)	VOLUME (CY)	CUM VOL (CY)
CUT	31.12	5.68	239.18
FILL	8.58	1.63	2432.97

13+50.00

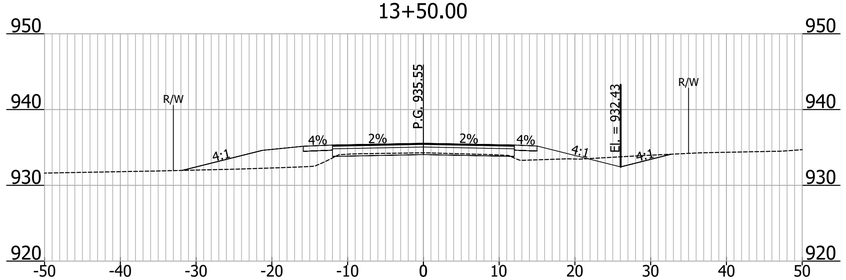

EARTHWORK QUANTITIES			
TYPE	AREA (SF)	VOLUME (CY)	CUM VOL (CY)
CUT	12.51	2.41	122.03
FILL	42.90	8.13	2337.12

14+50.00

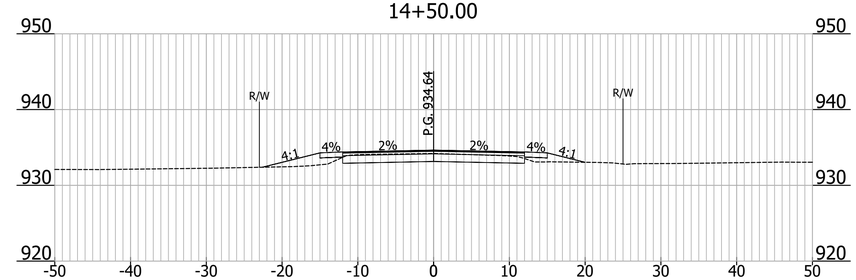

EARTHWORK QUANTITIES			
TYPE	AREA (SF)	VOLUME (CY)	CUM VOL (CY)
CUT	24.49	4.47	188.34
FILL	12.58	2.38	2413.74

DESIGNED: EAS 06/2019	DRAWN: EAS 06/2019	HAMILTON COUNTY, INDIANA	HORIZONTAL SCALE: N/A; VERTICAL SCALE: N/A; BRIDGE FILE: HAMILTON 311; DESIGNATION
CHECKED: NDB 06/2019	CHECKED: DTQ 06/2019	CROSS SECTIONS LINE "A"	SURVEY BOOK; CONTRACT; SHEET 21 of 22; PROJECT

INFRASTRUCTURE
ENGINEERING | INCORPORATED
201 South Capitol Avenue | Suite 490 | Indianapolis, IN 46225
P 317.243.5890 | F 317.243.9100 | www.infrastructure-eng.com

END INCIDENTAL CONSTRUCTION
16+00.00

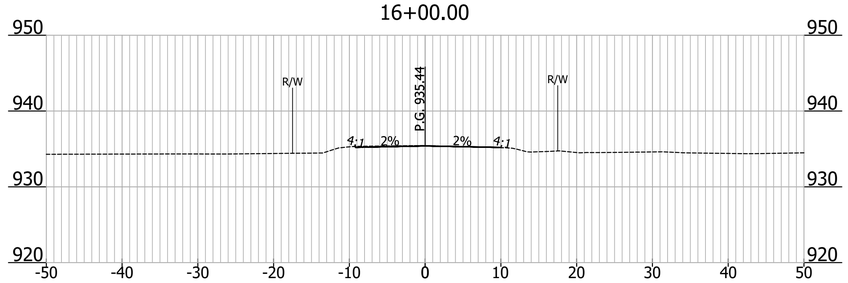

EARTHWORK QUANTITIES			
TYPE	AREA (SF)	VOLUME (CY)	CUM VOL (CY)
CUT	1.71	0.31	309.25
FILL	0.01	0.01	2447.75

END PROJECT
15+50.00

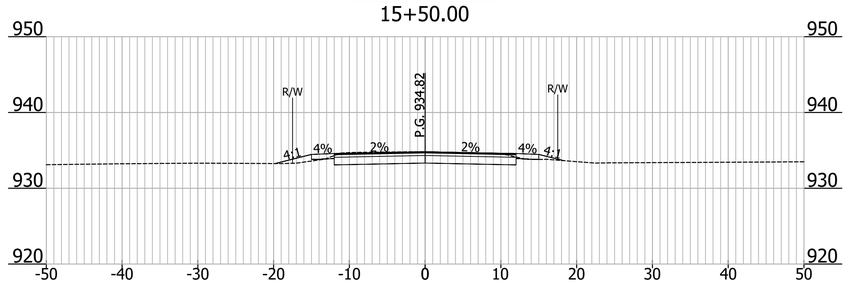

EARTHWORK QUANTITIES			
TYPE	AREA (SF)	VOLUME (CY)	CUM VOL (CY)
CUT	35.72	6.61	302.37
FILL	3.65	0.72	2444.31

STA. 12+55.00
Mod. Class II Drive

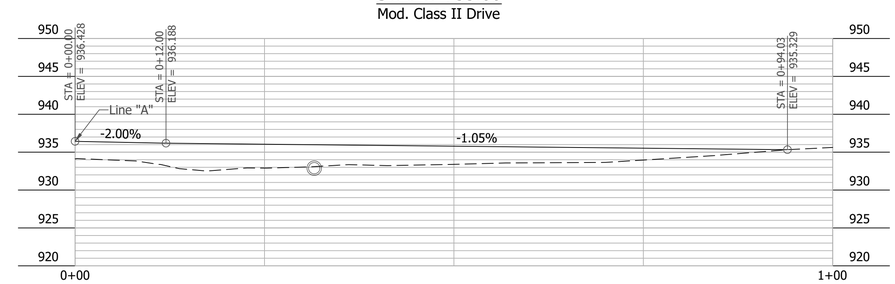

STA. 14+00.00
Class V Drive

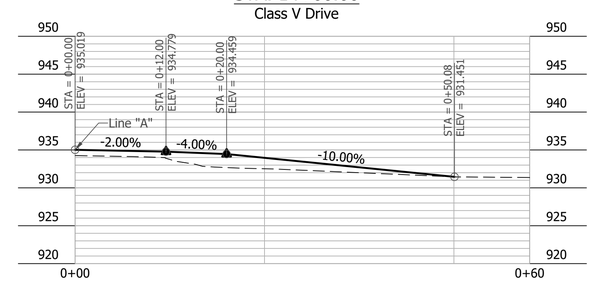

DESIGNED: EAS 06/2019	DRAWN: EAS 06/2019	HAMILTON COUNTY, INDIANA	HORIZONTAL SCALE: N/A; VERTICAL SCALE: N/A; BRIDGE FILE: HAMILTON 311; DESIGNATION:
CHECKED: NDB 06/2019	CHECKED: DTQ 06/2019	CROSS SECTIONS LINE "A" & DRIVES	SURVEY BOOK: ; SHEET: 22 of 22; CONTRACT: ; PROJECT: