PROJECT	DESIGNATION
PB-18-0006	HC-0562
	BRIDGE FILE
	29-00072B

HAMILTON COUNTY

REHABILITATION PLAN FOR

BRIDGE 72

266TH STREET EAST/CICERO CREEK

JACKSON AND WHITE RIVER TOWNSHIPS

HAMILTON COUNTY, INDIANA

PB-18-0006

INDEX				
STRUCTURE	TYPE	SPAN AND SKEW	OVER	STATION
29-00072B	CONTINUOUS COMPOSITE STEEL BEAM	4 SPANS: 47'-0", 61'-0", 61'-0", 47'-0" SKEW 00°00'00"	CICERO CREEK	℄ STRUCTURE 28+17.00 LINE 'A'

SHEET NO.	SUBJECT
1	TITLE SHEET
2	TYPICAL SECTIONS
3	MAINTENANCE OF TRAFFIC - DETOUR MAP
4-5	PLAN AND PROFILE
6	EROSION CONTROL AND PAVEMENT MARKING
7-9	SOIL BORINGS
10-11	GENERAL PLAN
12-13	DEMOLITION PLAN
14-16	END BENT DETAILS
17	PIER DETAILS
18-22	STRUCTURE STEEL DETAILS
23-25	SUPERSTRUCTURE DETAILS
26	RAILING DETAILS
27-28	SCREEDS
29	APPROACH SLAB
30-31	MISCELLANEOUS TABLES
32-37	CROSS SECTIONS

TRAFFIC DATA		266TH STREET EAST
A.A.D.T.	2021	1,756 V.P.D.
A.A.D.T. PROJECTED	2041	2,142 V.P.D.
D.H.V.	2041	221 V.P.H.
TRUCKS		4% A.A.D.T.
		2% D.H.V.
DESIGN DATA		
DESIGN SPEED		40 M.P.H.
PROJECT DESIGN CRITERIA		3R
FUNCTIONAL CLASSIFICATION		MAJOR COLLECTOR
RURAL/URBAN		RURAL
TERRAIN		LEVEL
ACCESS CONTROL		NONE
REGULATED DRAIN		YES

UTILITY CONTACT INFORMATION	
ELECTRIC	COMMUNICATIONS
DUKE ENERGY 100 SOUTH MILLCREEK ROAD NOBLESVILLE, IN 46062 CINDY ROWLAND (317) 776-5341 CINDY.ROWLAND@DUKEENERGY.COM	FRONTIER COMMUNICATION 20905 HAGUE ROAD NOBLESVILLE, IN, 46062 STEVE COSTLOW (317) 984-9010 STEVE.COSTLOW@FTR.COM

BRIDGE #72 IS LOCATED ON 266TH STREET EAST OVER CICERO CREEK, APPROXIMATELY 0.92 MILES EAST OF SR 19, IN SECTIONS 17, 18, 19, AND 20, TOWNSHIP 20 NORTH, RANGE 5 EAST, AND ALL WITHIN JACKSON AND WHITE RIVER TOWNSHIPS, HAMILTON COUNTY, INDIANA.

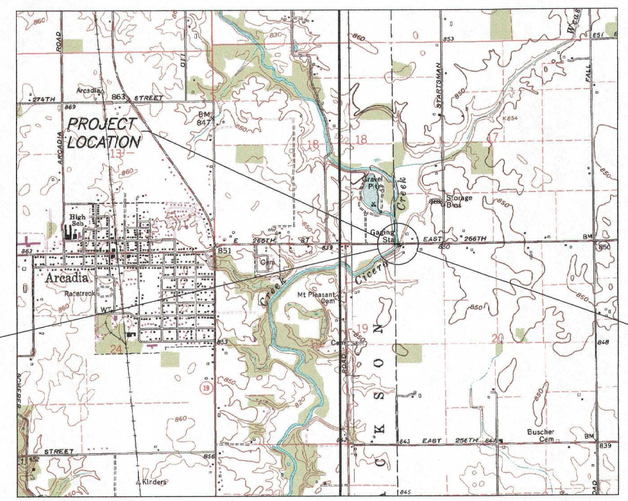

LOCATION MAP
HAMILTON COUNTY
NOT TO SCALE

APPROVED BY:
HAMILTON COUNTY BOARD OF COMMISSIONERS

MARK HEIRBRANDT, PRESIDENT

STEVEN C. DILLINGER, VICE PRESIDENT

CHRISTINE ALTMAN, MEMBER

ATTEST: Robin M Mills
ROBIN M. MILLS, COUNTY AUDITOR

DATE: 8/27/2021

RECOMMENDED FOR APPROVAL:
JAMES W. NEAL, P.E., PMP, COUNTY HIGHWAY ENGINEER

DATE: 8/26/2021

INDIANA DEPARTMENT OF TRANSPORTATION STANDARD SPECIFICATIONS DATED 2022 TO BE USED WITH THESE PLANS.

DLZ PROJECT NO. 1863-2011-90

REVISIONS	
DATE	SHEET NO.

CERTIFIED BY:

CERTIFIED THIS DATE: 8/18/2021

DAVID B. HENKLE REGISTERED NO. 11300252 STATE OF INDIANA PROFESSIONAL ENGINEER
DLZ INDIANA, LLC

CERTIFIED BY:

CERTIFIED THIS DATE: 8/18/2021

BRIAN M. SMITH REGISTERED No. 10100213 STATE OF INDIANA PROFESSIONAL ENGINEER
DLZ INDIANA, LLC

CERTIFIED BY:

CERTIFIED THIS DATE: 8/18/2021

MICHAEL A. KUMMETH REGISTERED No. 910382 STATE OF INDIANA PROFESSIONAL ENGINEER
DLZ INDIANA, LLC

PLANS PREPARED BY:
DLZ
138 NORTH DELAWARE STREET
INDIANAPOLIS, INDIANA 46204
PHONE: (317) 633-4120
FAX: (317) 633-4177

LEGEND

EXISTING		PROPOSED
	CONIFEROUS TREE	
	DECIDUOUS TREE	
	SHRUB	
	TREE LINE	
	STREAM/DITCH	
	SIGN	
	POWER POLE	
	UTILITY POLE	
	GUARDRAIL	
200	CONTOUR	200
G	UNDERGROUND GAS	
CATV	UNDERGROUND CABLE	
BT	UNDERGROUND TELEPHONE	
X	FENCE	X

SCALES:

PLAN 20 10 0 20 40 — SCALE: 1" = 20'

PROFILE HORIZ. 20 10 0 20 40 — SCALE: 1" = 20'

PROFILE VERT. 5 2.5 0 5 10 — SCALE: 1" = 5'

LAYOUT 30 15 0 30 60 — SCALE: 1" = 30'

FULL SIZE PLANS HAVE BEEN PREPARED USING STANDARD ENGINEERING SCALES. REDUCED SIZED PLANS WILL NOT CONFORM TO STANDARD SCALES. IN MAKING MEASUREMENTS ON REDUCED PLANS, THE ABOVE SCALES MAY BE USED.

Date: Aug 18, 2021, 11:25am User ID: clifford
Files: N:\Projects\GR1\2018\1863\201190 Hamilton #72\DWG\201190\01.dwg Model Tab: Plan Set

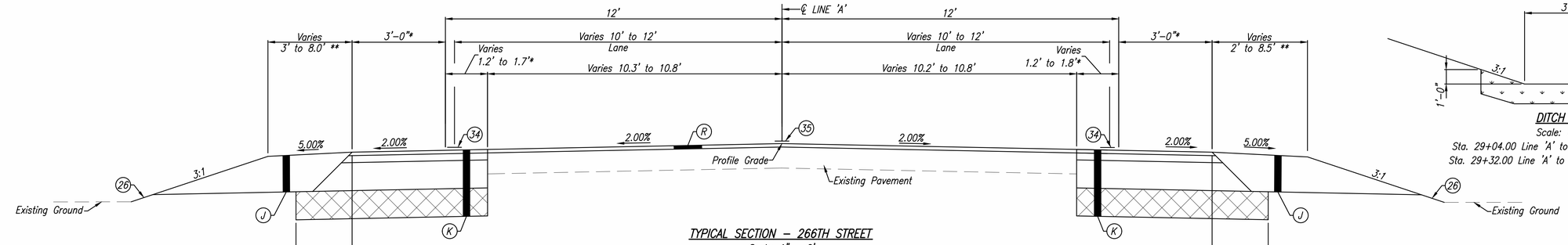

* 0' Sta. 24+27.00 Line 'A' to Sta 25+27.00 Line 'A' Lt.
0' Sta. 30+91.56 Line 'A' to Sta 31+10.00 Line 'A' Lt.
0' Sta. 30+32.00 Line 'A' to Sta 31+10.00 Line 'A' Rt.

** 3'-5" With MGS Guardrail

TYPICAL SECTION – 266TH STREET

Scale: 1" = 2'
Sta. 24+27.00 Line 'A' To Sta. 26+20.00 Line 'A'
Sta. 29+79.54 Line 'A' to Sta. 31+10.00 Line 'A'

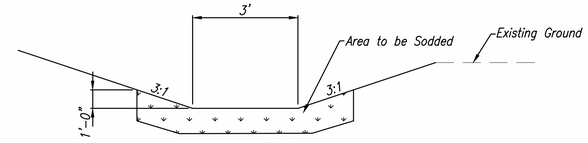

DITCH DETAIL

Scale: 1" = 2'
Sta. 29+04.00 Line 'A' to Sta 30+74.07 Line 'A' Lt.
Sta. 29+32.00 Line 'A' to Sta 30+68.07 Line 'A' Rt.

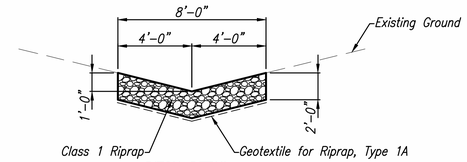

DITCH DETAIL

Scale: None
Sta. 28+85.00 Line 'A' to Sta. 29+32.00 Line 'A' Rt.

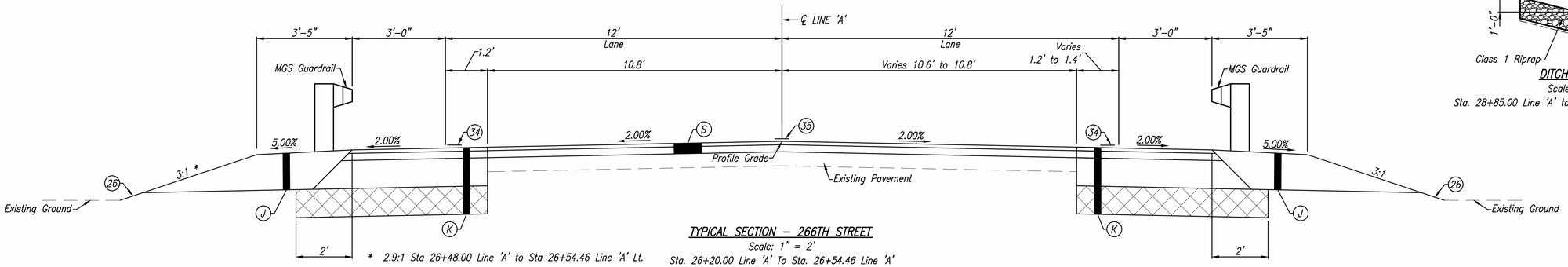

* 2.9:1 Sta 26+48.00 Line 'A' to Sta 26+54.46 Line 'A' Lt.

TYPICAL SECTION – 266TH STREET

Scale: 1" = 2'
Sta. 26+20.00 Line 'A' To Sta. 26+54.46 Line 'A'

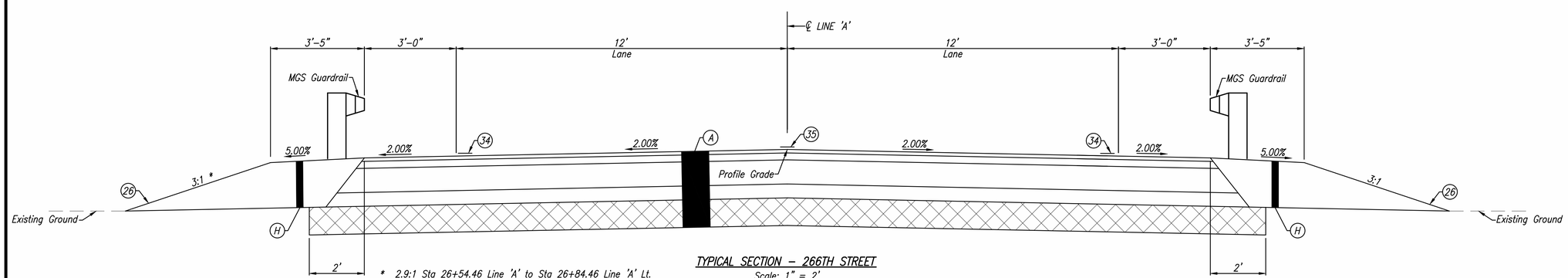

* 2.9:1 Sta 26+54.46 Line 'A' to Sta 26+84.46 Line 'A' Lt.

TYPICAL SECTION – 266TH STREET

Scale: 1" = 2'
Sta. 26+54.46 Line 'A' To Sta. 26+84.46 Line 'A'
Sta. 29+49.54 Line 'A' to Sta. 29+79.54 Line 'A'

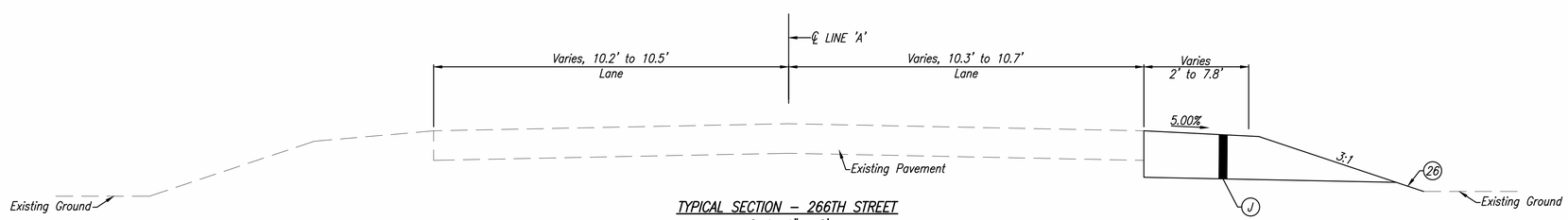

TYPICAL SECTION – 266TH STREET

Scale: 1" = 2'
Sta. 23+65.00 Line 'A' To Sta. 24+27.00 Line 'A'
Sta. 31+10.00 Line 'A' To Sta. 31+40.00 Line 'A'

NOTES:

1. For Each Lane of Traffic, the Intermediate Layer should be Placed Simultaneously for Mainline, and Adjacent Shoulder.
2. For Each Lane of Traffic, the Surface Layer should be Placed Simultaneously for Mainline and Adjacent Shoulder.

LEGEND

- (A) 165#/SYD HMA, Surface, Type C, On 330#/SYD HMA, Intermediate, Type C, On 1155#/SYD HMA, Base, Type C, On 6" Compacted Aggregate, No. 53 On Subgrade Treatment, Type IC On Geotextile for Subgrade, Type 2B
- (H) 21" Compacted Aggregate, No. 53
- (J) 10.5" Compacted Aggregate, No. 53
- (K) Widening To Be: 165#/SYD HMA, Surface, Type C, On 330#/SYD HMA, Intermediate, Type C, On 660#/SYD HMA, Base, Type C, On Subgrade Treatment, Type IC
- (R) 165#/SYD HMA, Surface, Type C, On Milling Transition
- (S) 165#/SYD HMA, Surface, Type C, On 330#/SYD HMA, Intermediate, Type C, On Milling Transition
- (26) Mulched Seeding, R
- (34) Line, Paint, Solid, White 4"
- (35) Line, Paint, Yellow, Broken 4"

DLZ

HAMILTON COUNTY — HAMILTON COUNTY HIGHWAY DEPARTMENT — INDIANA

TYPICAL SECTIONS

DRAWN: DPH	CHK'D. JFM		
DESIGNED: JFM	APPRV'D: BMS		
DATE: SEPTEMBER 1, 2021			
HORIZ. SCALE: AS NOTED			
VERT. SCALE: AS NOTED			
PROJECT NUMBER PB-18-0006 1863-2011-90			

NO.	REVISION	BY	DATE

BRIAN M. SMITH REGISTERED No. 10100213 STATE OF INDIANA PROFESSIONAL ENGINEER
9/1/2021
DLZ INDIANA, LLC

SHEET 2 OF 37
DRAWING NUMBER 2011TS01

Date: September 02, 2021, 3:36pm
File: X:\Projects\GFL\2018\1863\201190 Hamilton #72\DWG\2011TS01.dwg Layout Tab: Plan Set

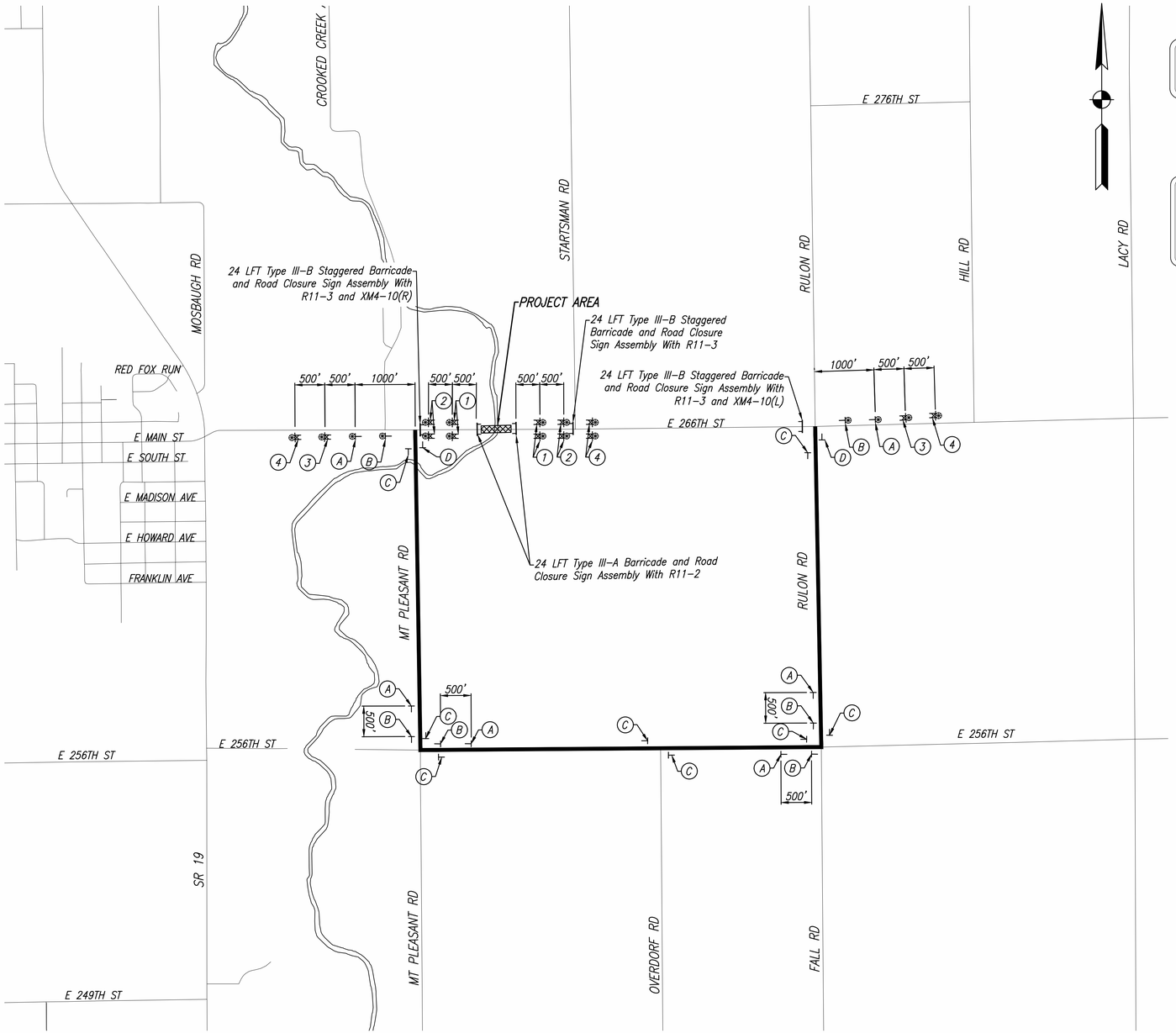

DETOUR ROUTE MARKER ASSEMBLY

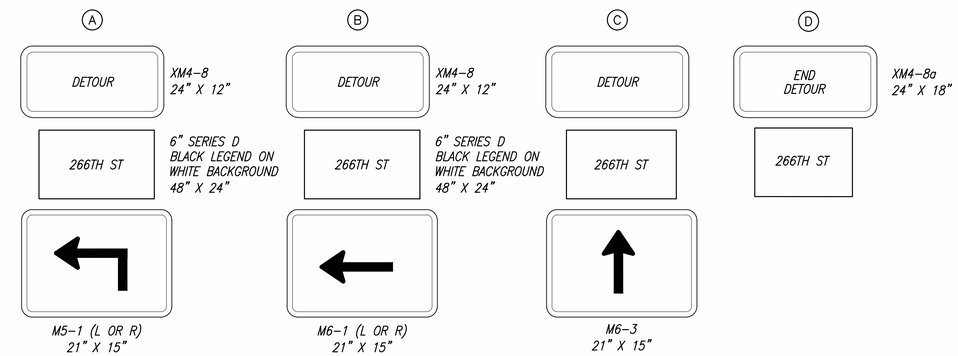

CONSTRUCTION SIGNS, TYPE "A"

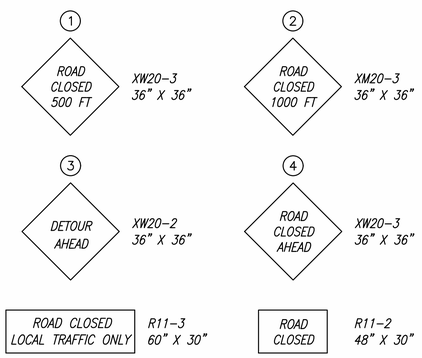

CONSTRUCTION SIGNS, TYPE "B"

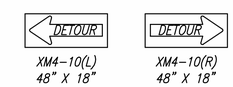

LEGEND

- Type III-A Or III-B Barricade
- Type "A" Construction Warning Light
- Construction Sign
- Detour Route Marker Assembly
- Local Detour Route
- Project Area

CONSTRUCTION SIGN SCHEDULE	
ITEM	TOTALS
TYPE 'A' SIGN	
R11-2	2 EACH
R11-3	3 EACH
XW20-2	2 EACH
XW20-3	12 EACH
TOTAL TYPE 'A' SIGN	19 EACH
TYPE 'B' SIGN	
XM4-10(L)	1 EACH
XM4-10(R)	1 EACH
TOTAL TYPE 'B' SIGN	2 EACH
DETOUR ROUTE MARKER ASSEMBLY	22 EACH
ROAD CLOSURE SIGN ASSEMBLY	5 EACH
TYPE III-A BARRICADE	48 LFT
TYPE III-B BARRICADE	72 LFT

NOTES

1. All Signs, Barricades, And Pavement Markings Shall Conform To The Indiana Manual On Traffic Control Devices For Streets And Highways, 2011 And Any Current Supplements Thereto.
2. Contractor Shall Maintain Access To All Commercial And Private Properties During Construction.

DLZ

HAMILTON COUNTY — INDIANA

HAMILTON COUNTY HIGHWAY DEPARTMENT

MAINTENANCE OF TRAFFIC DETOUR MAP

DRAWN: CJF CHK'D. NWB
DESIGNED: NWB APPRV'D: JFM
DATE: SEPTEMBER 1, 2021
HORIZ. SCALE: NOT TO SCALE
VERT. SCALE: N/A
PROJECT NUMBER PB-18-0006 1863-2011-90

NO.	REVISION	BY	DATE

BRIAN M. SMITH REGISTERED No. 10100213 STATE OF INDIANA PROFESSIONAL ENGINEER
9/1/2021
DLZ INDIANA, LLC

SHEET 3 OF 37

DRAWING NUMBER 2011MT01

Date: August 30, 2021, 7:09pm
File: X:\Projects\GFL\2018\1863\201190 Hamilton #72\DWG\2011MT01.dwg Layout Tab: Plan Set

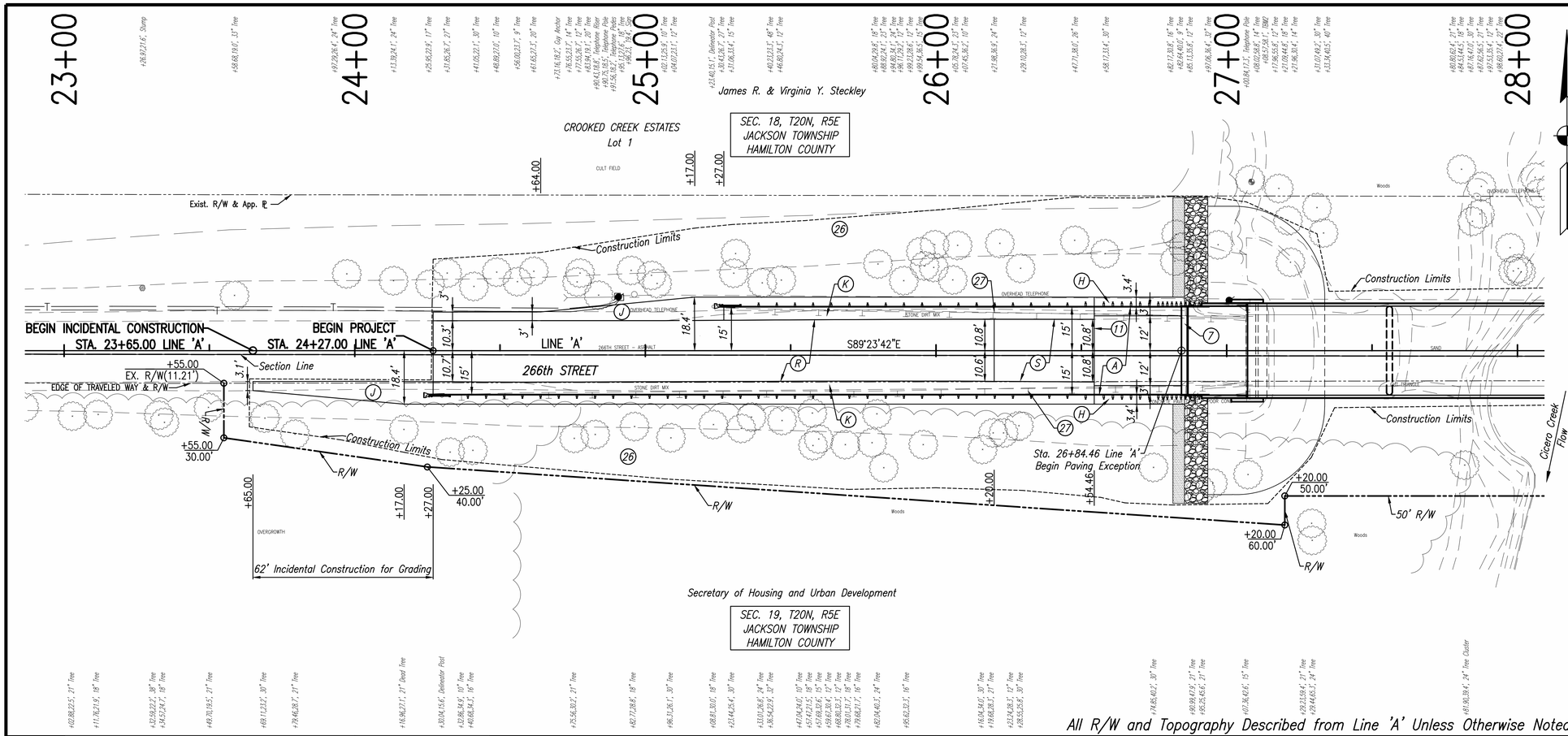

HYDRAULIC DATA

Drainage Area:	130.8 SQ MI
Q100	8400 CFS
El. @ Q100	828.09
Velocity @ Q100	2.33 FT/S
Waterway Opening Provided Below Q100 El.	3111 SQ. FT.
Skew:	0°0'0"
Existing Waterway Opening Provided Below Q100 El.	1942 SQ. FT.
Scour Elevation @ Q100	
Pier 2	807.79
Pier 3	807.79
Pier 4	807.79

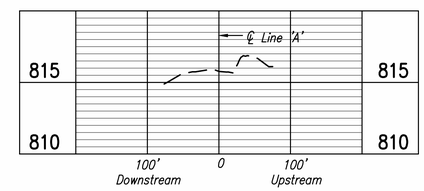

PROFILE OF CICERO CREEK

Horizontal Scale: 1" = 100'
Vertical Scale: 1" = 5'

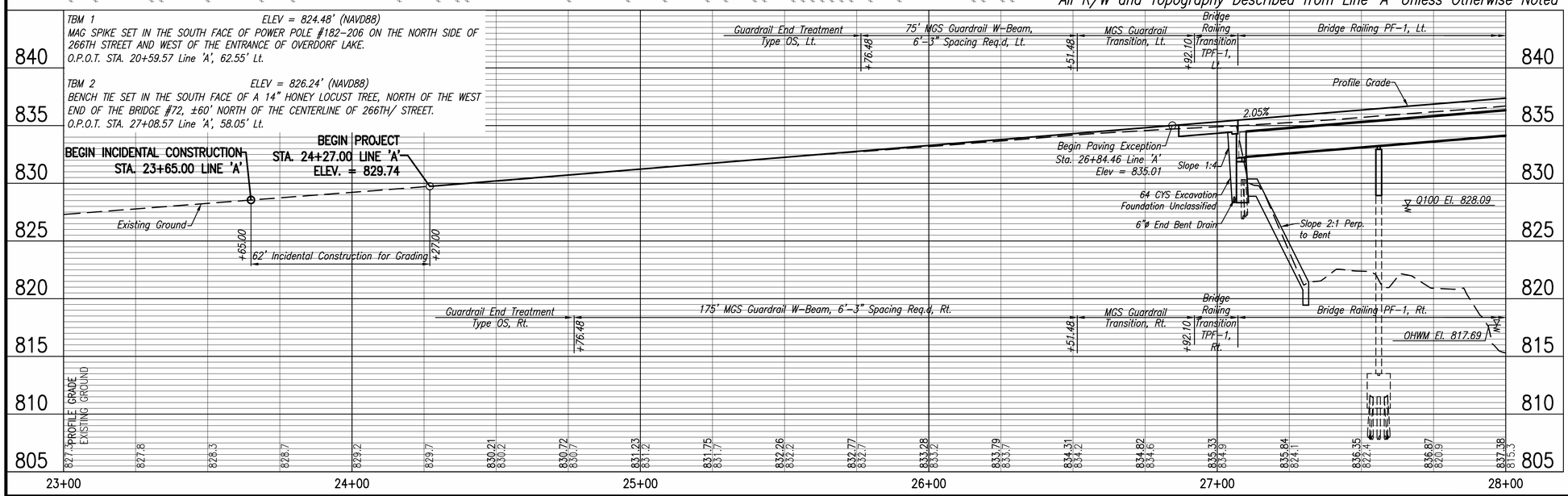

LEGEND

- (A) 165#/SYD HMA, Surface, Type C, On 330#/SYD HMA, Intermediate, Type C, On 1155#/SYD HMA, Base, Type C, On 6" Compacted Aggregate, No. 53 On Subgrade Treatment, Type IC On Geotextile for Subgrade, Type 2B
- (H) 21" Compacted Aggregate, No. 53
- (J) 10.5" Compacted Aggregate, No. 53
- (K) Widening To Be: 165#/SYD HMA, Surface, Type C, On 330#/SYD HMA, Intermediate, Type C, On 660#/SYD HMA, Base, Type C, On Subgrade Treatment, Type IC
- (R) 165#/SYD, HMA Surface, Type C, On Milling Transition
- (S) 165#/SYD, HMA Surface, Type C, On 330#/SYD, HMA Intermediate, Type C, On Milling Transition
- (7) Terminal Joint, Type HMA
- (11) Sawcut
- (26) Mulched Seeding, R
- (27) Remove Guardrail

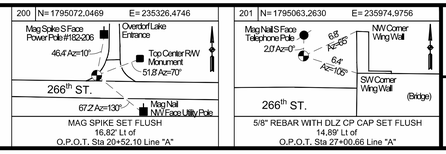

DLZ

HAMILTON COUNTY INDIANA

HAMILTON COUNTY HIGHWAY DEPARTMENT

PLAN AND PROFILE LINE 'A'

DRAWN: CJF	CHK'D. JFM		
DESIGNED: JFM	APPRV'D: BMS		
DATE: SEPTEMBER 1, 2021			
HORIZ. SCALE: 1" = 20'			
VERT. SCALE: 1" = 5'			
PROJECT NUMBER PB-18-0006 1863-2011-90			

NO.	REVISION	BY	DATE

BRIAN M. SMITH REGISTERED No. 10100213 STATE OF INDIANA PROFESSIONAL ENGINEER

9/1/2021

DLZ INDIANA, LLC

SHEET 4 OF 37

DRAWING NUMBER 2011PP01

Date: September 02, 2021, 3:39pm
File: X:\Projects\GFL\2018\1863\201190 Hamilton #72\DWG\2011PP01.dwg Layout Tab: Layout1

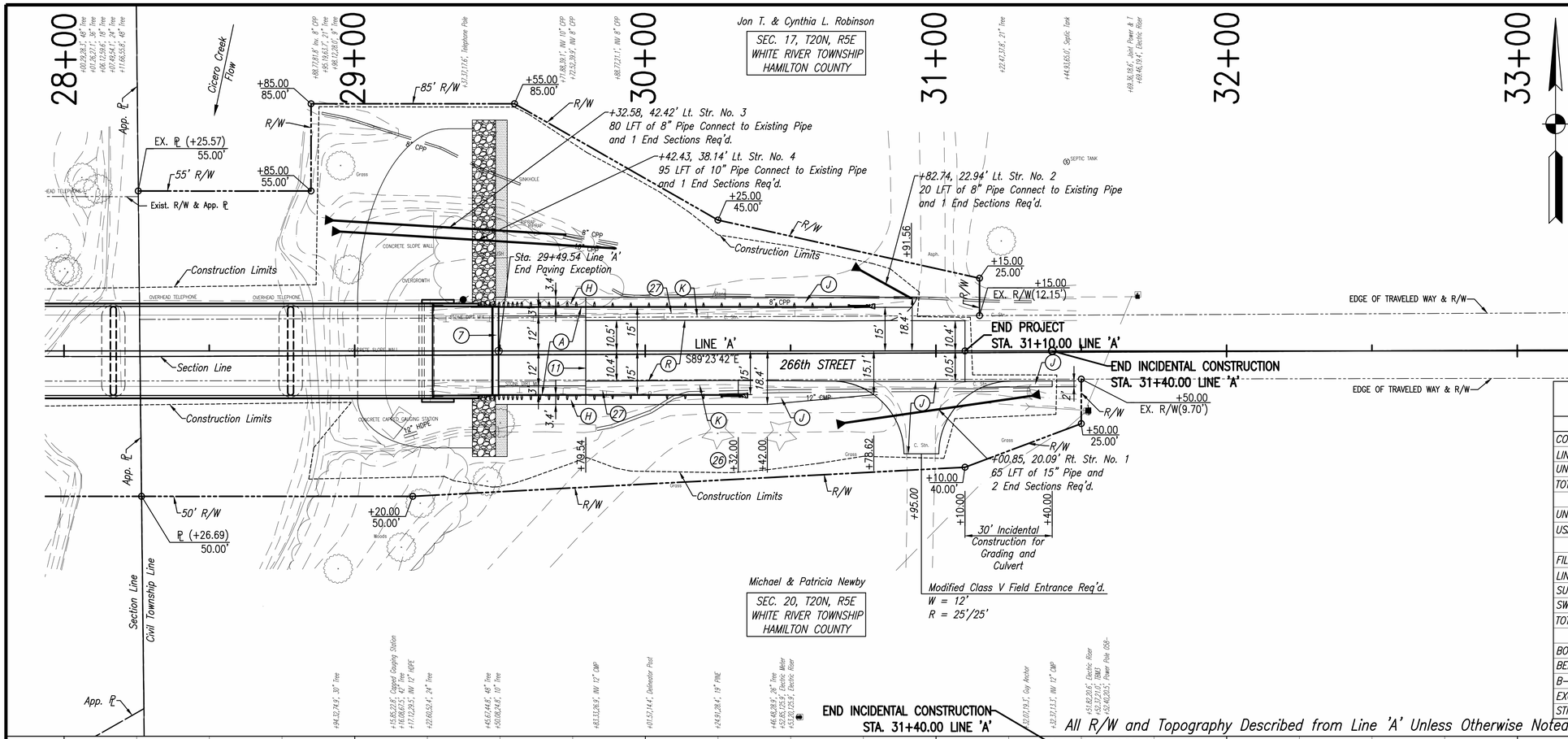

EARTHWORK BALANCE

ITEM	VOLUME (CYS)
COMMON EXCAVATION	
LINE 'A'	445
UNDERCUT (PER GEOTECHNICAL REPORT)	835
TOTAL COMMON EXCAVATION	1,280
UNUSABLE EXCAVATION (ASSUMED 40% OF LINE 'A' + UNDERCUT)	1,015
USABLE EXCAVATION	265
FILL	
LINE 'A'	2,140
SUBTOTAL	2,140
SWELL (25%)	540
TOTAL FILL	2,680
BORROW	2,415
BENCHING (NO DIRECT PAYMENT)	1,005
B-BORROW	835
EXCAVATION FOUNDATION UNCLASSIFIED	113
STRUCTURE BACKFILL, TYPE I	170

TBM 3 ELEV = 845.63' (NAVD88)
MAG SPIKE SET IN THE NORTH FACE OF POWER POLE #058-205, EAST OF THE STONE DRIVE ±225' EAST OF THE EAST END OF THE BRIDGE #72.
O.P.O.T. STA. 31+52.37 Line 'A', 21.04' Rt.

BM 'HAM 0024' ELEV = 839.80' (NAVD88)
INDIANA HIGHWAY COMMISSION DISK STAMPED "HAM 0024" FOUND AT THE TOP OF THE SOUTHEAST WING WALL OF BRIDGE #72.
O.P.O.T. STA. 29+26.66 Line 'A', 13.56' Rt.

LEGEND

- (A) 165#/SYD HMA, Surface, Type C, On 330#/SYD HMA, Intermediate, Type C, On 1155#/SYD HMA, Base, Type C, On 6" Compacted Aggregate, No. 53 On Subgrade Treatment, Type IC On Geotextile for Subgrade, Type 2B
- (H) 21" Compacted Aggregate, No. 53
- (J) 10.5" Compacted Aggregate, No. 53
- (K) Widening To Be: 165#/SYD HMA, Surface, Type C, On 330#/SYD HMA, Intermediate, Type C, On 660#/SYD HMA, Base, Type C, On Subgrade Treatment, Type IC
- (R) 165#/SYD, HMA Surface, Type C, On Milling Transition
- (7) Terminal Joint, Type HMA
- (11) Sawcut
- (26) Mulched Seeding, R
- (27) Remove Guardrail

DLZ

202 N=1795028.2460 E=236398.7849
Asph Drive
Mag Nail S/W Face Utility Pole
266th ST.
Mag Nail S Face 26" Tree
78.4' Az=250°
28.1' Az=100°
Mag Spike S Face Power Pole #058-205
5/8" REBAR WITH DLZ CP CAP SET FLUSH
15.65' Rt of
O.P.O.T. Sta 31+24.82 Line "A"

HAMILTON COUNTY INDIANA

HAMILTON COUNTY HIGHWAY DEPARTMENT

PLAN AND PROFILE
LINE 'A'

DRAWN: DPH	CHK'D. JFM		
DESIGNED: JFM	APPRV'D: BMS		
DATE: SEPTEMBER 1, 2021			
HORIZ. SCALE: 1" = 20'			
VERT. SCALE: 1" = 5'			
PROJECT NUMBER PB-18-0006 1863-2011-90			

NO.	REVISION	BY	DATE

BRIAN M. SMITH REGISTERED No. 10100213 STATE OF INDIANA PROFESSIONAL ENGINEER
9/1/2021
DLZ INDIANA, LLC

SHEET 5
OF 37
DRAWING NUMBER 2011PP01

Date: September 02, 2021, 3:40pm
File: X:\Projects\GFL\2018\1863\2011190 Hamilton #72\DWG\2011PP01.dwg Layout Tab: Layout1 (2)

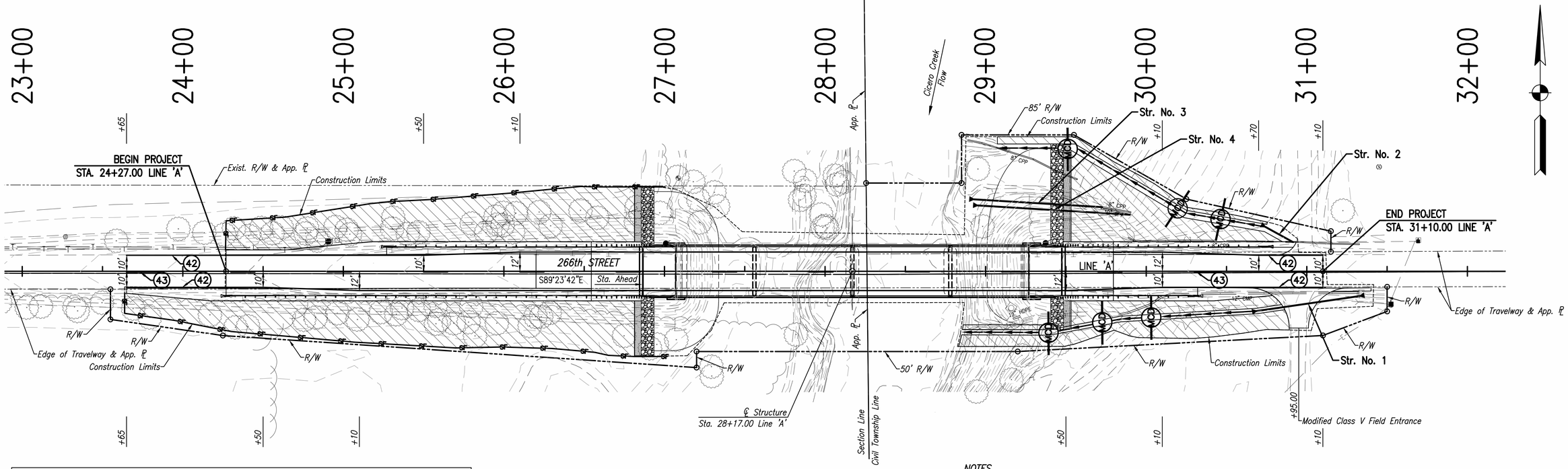

EROSION CONTROL SCHEDULE

LOCATION				PERIMETER PROTECTION	CHECK DAM, REVETMENT RIPRAP			EROSION CONTROL BLANKET
					TEMPORARY GEOTEXTILE	REVETMENT RIPRAP	TEMPORARY FILTER STONE	
STATION TO STATION		LEFT	RIGHT	LFT	SYS	TON	TON	SYS
LINE 'A'								
23+65	26+82		X					873
24+25	27+00	X		294				
24+27	26+82	X						756
24+65	27+00		X	350				
28+85	30+89		X					282
29+10	30+85	X						477
29+35			X		21	6	0.7	
29+50		X			40	15	1.4	
29+65			X		21	6	0.7	
30+00			X		21	6	0.7	
30+10		X			21	6	0.7	
30+50		X			21	6	0.7	
TOTAL				644	145	45	4.9	2,388

NOTES

1. THE CONTRACTOR SHALL INSTALL ALL CHECK DAMS AND SILT FENCES SHOWN ON THE PLANS PRIOR TO ANY LAND DISTURBING ACTIVITIES.
2. CONTRACTOR SHALL SEED/MULCH BANKS OF PROPOSED DITCH AS SOON AS GRADE IS ESTABLISHED.
3. CONTRACTOR SHALL KEEP AN UP-TO-DATE RECORD ONSITE OF ANY ALTERATIONS TO THE STORM WATER POLLUTION PREVENTION PLAN.
4. CONTRACTOR SHALL NOTIFY THE HAMILTON COUNTY SOIL AND WATER CONSERVATION DISTRICT AT LEAST 48 HOURS PRIOR TO BEGINNING OF CONSTRUCTION.
5. THE CONTRACTOR HAS FULL RESPONSIBILITY OF INSPECTING THE EROSION CONTROL MEASURES ON A DAILY BASIS. AT A MINIMUM, PRACTICES NEED TO BE INSPECTED WEEKLY, WITHIN 24 HOURS AFTER EACH STORM EVENT OVER 1/2" AND DAILY DURING PROLONGED STORM EVENTS. FAILING PRACTICES SHALL BE REPAIRED OR REPLACED IMMEDIATELY.
6. ANY SEDIMENT TRACKED OUT OF PROJECT AREA ONTO PUBLIC STREETS MUST BE CLEANED UP THE SAME DAY IT OCCURS.
7. CONTRACTOR SHALL SUBMIT CONSTRUCTION STAGING PLAN DETAILING ALL VEHICLE AND EQUIPMENT PARKING AREAS, FUELING LOCATIONS, CONSTRUCTION TRAILER PLACEMENT, AND DESIGNATED CONCRETE TRUCK WASHOUT AREAS.
8. IF CONSTRUCTION WINDOW EXTENDS THROUGH WINTER, TEMPORARY MULCHING AS SPECIFIED IN CHAPTER 7 OF THE INDIANA STORM WATER QUALITY MANUAL SHALL BE REQUIRED.
9. TEMPORARY SEEDING SHALL BE INSTALLED ON ANY CLEARED AREA THAT WILL BE UNDISTURBED FOR 15 DAYS OR MORE.
10. IT IS THE RESPONSIBILITY OF THE CONTRACTOR TO MAINTAIN AND CONTAIN CONCRETE WASHOUT AREAS AND STAGING AREAS.
11. CONTRACTOR IS REQUIRED TO PROVIDE A SPILL PREVENTION AND CONTAINMENT PLAN PRIOR TO BEGINNING CONSTRUCTION.
12. CONTRACTOR IS REQUIRED TO SUBMIT A CONSTRUCTION SEQUENCE PLAN TO HAMILTON COUNTY SOIL AND WATER CONSERVATION DISTRICT PRIOR TO ANY LAND DISTRIBUTING ACTIVITIES.
13. PERMANENT STABILIZATION IS REQUIRED 7 DAYS AFTER FINAL GRADE.

LEGEND:

- (42) Line, Paint, Solid White 4"
- (43) Line, Paint, Broken Yellow 4"
- MCD Temporary, Check Dam Revetment Riprap Modified (See Standard Drawing No. E 205-TECD-01)
- SF Temporary, Silt Fence (See Standard Drawing No. E 205-TECP-02)
- Ditch Flow Line
- Temporary Erosion Control Blanket

DLZ

HAMILTON COUNTY — HAMILTON COUNTY HIGHWAY DEPARTMENT — INDIANA

EROSION CONTROL AND PAVEMENT MARKING

DRAWN: JLM	CHK'D. JFM		
DESIGNED: JFM	APPRV'D: BMS		
DATE: SEPTEMBER 1, 2021			
HORIZ. SCALE: 1" = 30'			
VERT. SCALE:			
PROJECT NUMBER PB-18-0006 1863-2011-90			

NO.	REVISION	BY	DATE

BRIAN M. SMITH REGISTERED No. 10100213 STATE OF INDIANA PROFESSIONAL ENGINEER

9/1/2021

DLZ INDIANA, LLC

SHEET 6 OF 37

DRAWING NUMBER 2011EC01

Date: August 30, 2021, 7:28pm
File: X:\Projects\GFL\2018\1863\201190 Hamilton #72\DWG\2011EC01.dwg Layout Tab: Layout1

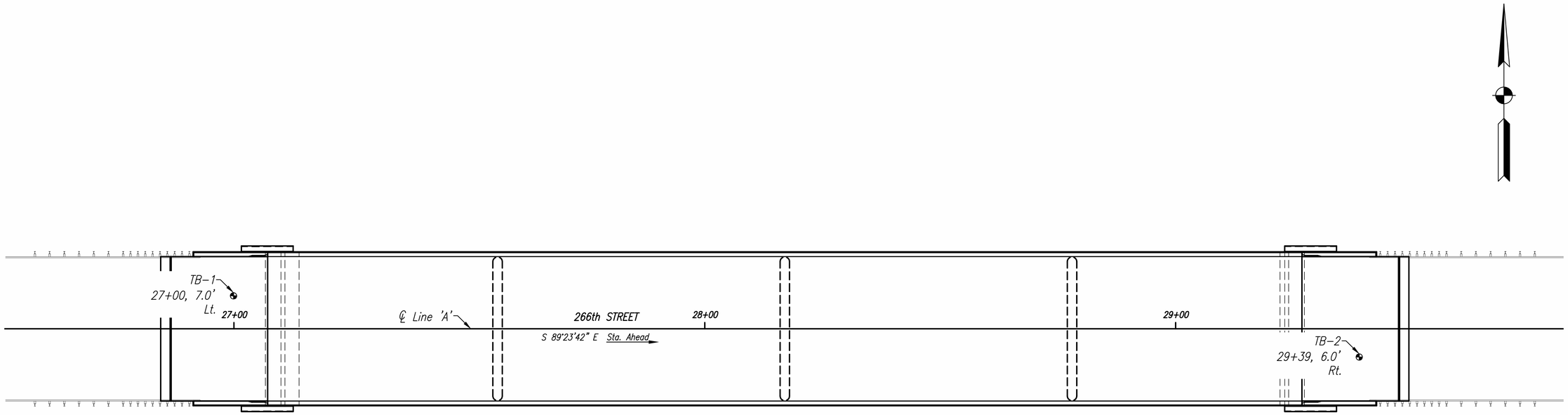

BORING PLAN

Scale: 3/32" = 1'-0"

PILE LOADING FOR GEOTECHNICAL TESTING

	Bent 1	Bent 5
Pile Size, Type, and Grade	SEC Pipe Pile 14" x 0.312" (with Pile Tips)	SEC Pipe Pile 14" x 0.312" (with Pile Tips)
Design (Service) Load (kips)	120	120
Factor of Safety (FS) [1]	2.5	2.5
Downdrag Load, DD (kips)	N/A	N/A
Downdrag Friction – R_{sdd} (kips)	N/A	N/A
Scour Zone Friction – $R_{s\ scour}$ (kips)	N/A	N/A
Relaxation in Shale (kips)	N/A	N/A
Ultimate Pile Load (kips)	300	300
Estimated Pile Tip Elevation	798.0	798.0
Testing Method	Dynamic Formula – INDOT Standard Specification 701.05(a)	

NOTES

1. N indicates the number of blows required to drive a 1 3/8" I.D., 2" O.D. Split-Spoon Sampler 6" by means of a 140 lb. weight falling 30".
2. See Sheets 9 & 8 for Boring Logs.

Xref C:\Users\aprieur\AppData\Local\Temp\tempDgn.dwg

Date: September 02, 2021, 3:41pm
File: X:\Projects\GFL\2018\1863\201190 Hamilton #72\DWG\2011SB01.dwg Layout Tab: Layout

DLZ

HAMILTON COUNTY INDIANA

HAMILTON COUNTY
HIGHWAY DEPARTMENT

SOIL BORINGS

DRAWN: QCP	CHK'D. EAF		
DESIGNED: EAF	APPRV'D: DBH		
DATE: SEPTEMBER 1, 2021			
HORIZ. SCALE: AS NOTED			
VERT. SCALE:			
PROJECT NUMBER PB-18-0006 1863-2011-90			

NO.	REVISION	BY	DATE

DAVID B. HENKLE REGISTERED NO. 11300252 STATE OF INDIANA PROFESSIONAL ENGINEER

9/1/2021

DLZ INDIANA, LLC

SHEET 7 OF 37

DRAWING NUMBER 2011SB01

EARTH EXPLORATION
A Terracon COMPANY

LOG OF TEST BORING

Project: 266th Street over Cicero Creek
Location: Hamilton Co., IN
Client: DLZ Indiana, LLC
7770 West New York Street - Indianapolis, Indiana 46214
317-273-1690 / 317-273-2250 (Fax)

Boring No.: TB-1
Elevation: 835
Datum: NAVD 88
EEI Proj. No.: CJ185650
Sheet 1 of 2

Proj. No.	E-18-0005	Station	27+00	Weather	Overcast	Driller	D.C.
Struct. No.	Hamilton 72	Offset	7' Lt. "A"	Temp.	80° F	Inspector	---

SAMPLE No.	Type	Rec %	N Value	Depth ft	Elev	DESCRIPTION/CLASSIFICATION and REMARKS	q_p tsf	q_u tsf	γ_d pcf	W %	LL %	PL %	PI %
						ASPHALTIC CONCRETE							
						PORTLAND CEMENT CONCRETE, with rebar							
SS-1		35	4			**SAND AND GRAVEL**, very loose to medium dense, moist, brown, with loam seam near 1½ ft (fill)	2			11.7			
SS-2		80	12	5	830								
SS-3		65	13			**SANDY LOAM**, medium stiff, moist, brown (fill)	½			11.3			
						SAND AND GRAVEL, loose, moist, brown (fill)							
SS-4		80	7	10	825	**CLAY LOAM**, medium stiff, moist, brown	¼			23.2			
						SANDY LOAM, medium stiff, moist, grayish brown							
SS-5		90	6	15	820		½			18.0			
SS-6		80	24	20	815	**SAND AND GRAVEL**, medium dense to loose, moist to wet below 18 ft, brown							
SS-7		90	10	25	810								
SS-8		90	21	30	805	**GRAVELLY SAND**, medium dense, wet, brown							
SS-9		90	24	35	800								

Continued Next Page

WATER LEVEL OBSERVATIONS

Depth ft	While Drilling	Upon Completion	BF After Drilling
To Water	18	13	
To Cave-in		18	

The stratification lines represent the approximate boundary between soil/rock types and the transition may be gradual.

GENERAL NOTES

Start 7/20/20 End 7/20/20 Rig CME 55
Drilling Method 3¼" I.D. HSA Truck
Remarks **Backfilled with auger cuttings and concrete patch at surface.**

EARTH EXPLORATION
A Terracon COMPANY

LOG OF TEST BORING

Project: 266th Street over Cicero Creek
Location: Hamilton Co., IN
Client: DLZ Indiana, LLC
7770 West New York Street - Indianapolis, Indiana 46214
317-273-1690 / 317-273-2250 (Fax)

Boring No.: TB-1
Elevation: 835
Datum: NAVD 88
EEI Proj. No.: CJ185650
Sheet 2 of 2

Proj. No.	E-18-0005	Station	27+00	Weather	Overcast	Driller	D.C.
Struct. No.	Hamilton 72	Offset	7' Lt. "A"	Temp.	80° F	Inspector	---

SAMPLE No.	Type	Rec %	N Value	Depth ft	Elev	DESCRIPTION/CLASSIFICATION and REMARKS	q_p tsf	q_u tsf	γ_d pcf	W %	LL %	PL %	PI %
						GRAVELLY SAND, medium dense, wet, brown							
SS-10		80	28	40	795								
						SANDY LOAM, hard, moist, brown							
SS-11		65	29	45	790		4		134.4	8.7			
SS-12		80	27	50	785		>4½	6.54	129.3	11.5			
SS-13		90	71	55	780		>4½			10.9	25	15	10
SS-14		85	50/.5			**CLAY LOAM**, hard to stiff, moist, brown, with clay seam near 70 ft, with cobbles	1½	1.58	125.1	13.1			
				60	775								
SS-15		85	50/.5				1			16.3			
				65	770								
SS-16		80	53	70	765		2½			20.0			
						End of Boring at 70 ft							

The stratification lines represent the approximate boundary between soil/rock types and the transition may be gradual.

Date: August 30, 2021, 7:32pm
File: X:\Projects\GFL\2018\1863\201190 Hamilton #72\DWG\2011SB01.dwg Layout Tab: Layout (2)

DLZ

HAMILTON COUNTY — HAMILTON COUNTY HIGHWAY DEPARTMENT — INDIANA

SOIL BORINGS

DRAWN: QCP	CHK'D. EAF		
DESIGNED: EAF	APPRV'D: DBH		
DATE: SEPTEMBER 1, 2021			
HORIZ. SCALE: AS NOTED			
VERT. SCALE:			
PROJECT NUMBER PB-18-0006 1863-2011-90			

NO.	REVISION	BY	DATE

DAVID B. HENKLE REGISTERED NO. 11300252 STATE OF INDIANA PROFESSIONAL ENGINEER
9/1/2021
DLZ INDIANA, LLC

SHEET 8 OF 37
DRAWING NUMBER 2011SB01

EARTH EXPLORATION
A Terracon COMPANY

LOG OF TEST BORING

Project: 266th Street over Cicero Creek
Location: Hamilton Co., IN
Client: DLZ Indiana, LLC
7770 West New York Street - Indianapolis, Indiana 46214
317-273-1690 / 317-273-2250 (Fax)

Boring No.: TB-2
Elevation: 840
Datum: NAVD 88
EEI Proj. No.: CJ185650
Sheet 1 of 2

Proj. No.	E-18-0005	Station	29+39	Weather	Cloudy	Driller	T.M.
Struct. No.	Hamilton 72	Offset	6' Rt. "A"	Temp.	72° F	Inspector	---

SAMPLE No.	Type	Rec %	N Value	Depth ft	Elev	DESCRIPTION/CLASSIFICATION and REMARKS	q_p tsf	q_u tsf	γ_d pcf	W %	LL %	PL %	PI %
						ASPHALTIC CONCRETE							
SS-1		0	8										
SS-2		45	7	5	835		4			11.6			
SS-3		100	15				2½			9.3			
SS-4		85	14	10	830		1¾			9.6			
						CLAY LOAM, hard to stiff, moist, brown, gray below 13.5 ft (fill to 6 ft)							
SS-5		100	19	15	825		>4½			10.1			
SS-6		100	20	20	820		2½			11.7			
SS-7		30	26	25	815		3¾			11.9			
						SANDY LOAM and Gravel, medium dense, moist, wet below 26 ft, brown							
SS-8		45	25	30	810								
						SAND AND GRAVEL, dense, wet, brown							
SS-9		90	32	35	805								

Continued Next Page

WATER LEVEL OBSERVATIONS

Depth ft	While Drilling	Upon Completion	BF After Drilling
To Water	26	16	
To Cave-in		24	

The stratification lines represent the approximate boundary between soil/rock types and the transition may be gradual.

GENERAL NOTES

Start 8/3/20 End 8/3/20 Rig CME 55
Drilling Method 3¼" I.D. HSA Truck
Remarks: Backfilled with auger cuttings and concrete patch at surface.

EARTH EXPLORATION
A Terracon COMPANY

LOG OF TEST BORING

Project: 266th Street over Cicero Creek
Location: Hamilton Co., IN
Client: DLZ Indiana, LLC
7770 West New York Street - Indianapolis, Indiana 46214
317-273-1690 / 317-273-2250 (Fax)

Boring No.: TB-2
Elevation: 840
Datum: NAVD 88
EEI Proj. No.: CJ185650
Sheet 2 of 2

Proj. No.	E-18-0005	Station	29+39	Weather	Cloudy	Driller	T.M.
Struct. No.	Hamilton 72	Offset	6' Rt. "A"	Temp.	72° F	Inspector	---

SAMPLE No.	Type	Rec %	N Value	Depth ft	Elev	DESCRIPTION/CLASSIFICATION and REMARKS	q_p tsf	q_u tsf	γ_d pcf	W %	LL %	PL %	PI %
						SAND AND GRAVEL, dense, wet, brown							
SS-10		100	41	40	800								
SS-11		55	29	45	795		>4½			13.7	20	15	5
SS-12		45	33	50	790	**CLAY LOAM**, hard, moist, brown	4¼			7.6			
SS-13		65	75	55	785		>4½			9.9			
SS-14		80	40	60	780		>4½	7.60	121.4	14.0			
SS-15		100	38	65	775	**CLAY**, hard, moist, brown	>4½			18.6			
SS-16		45	30	70	770		>4½	5.21	114.3	17.8			
						End of Boring at 70 ft							

The stratification lines represent the approximate boundary between soil/rock types and the transition may be gradual.

Date: August 30, 2021, 7:33pm
File: X:\Projects\GFL\2018\1863\201190 Hamilton #72\DWG\2011SB01.dwg Layout Tab: Layout (3)

DLZ

HAMILTON COUNTY INDIANA

HAMILTON COUNTY
HIGHWAY DEPARTMENT

SOIL BORINGS

DRAWN: QCP CHK'D: EAF
DESIGNED: EAF APPRV'D: DBH
DATE: SEPTEMBER 1, 2021
HORIZ. SCALE: AS NOTED
VERT. SCALE:
PROJECT NUMBER PB-18-0006 1863-2011-90

NO.	REVISION	BY	DATE

DAVID B. HENKLE REGISTERED NO. 11300252 STATE OF INDIANA PROFESSIONAL ENGINEER
9/1/2021
DLZ INDIANA, LLC

SHEET 9
OF 37
DRAWING NUMBER
2011SB01

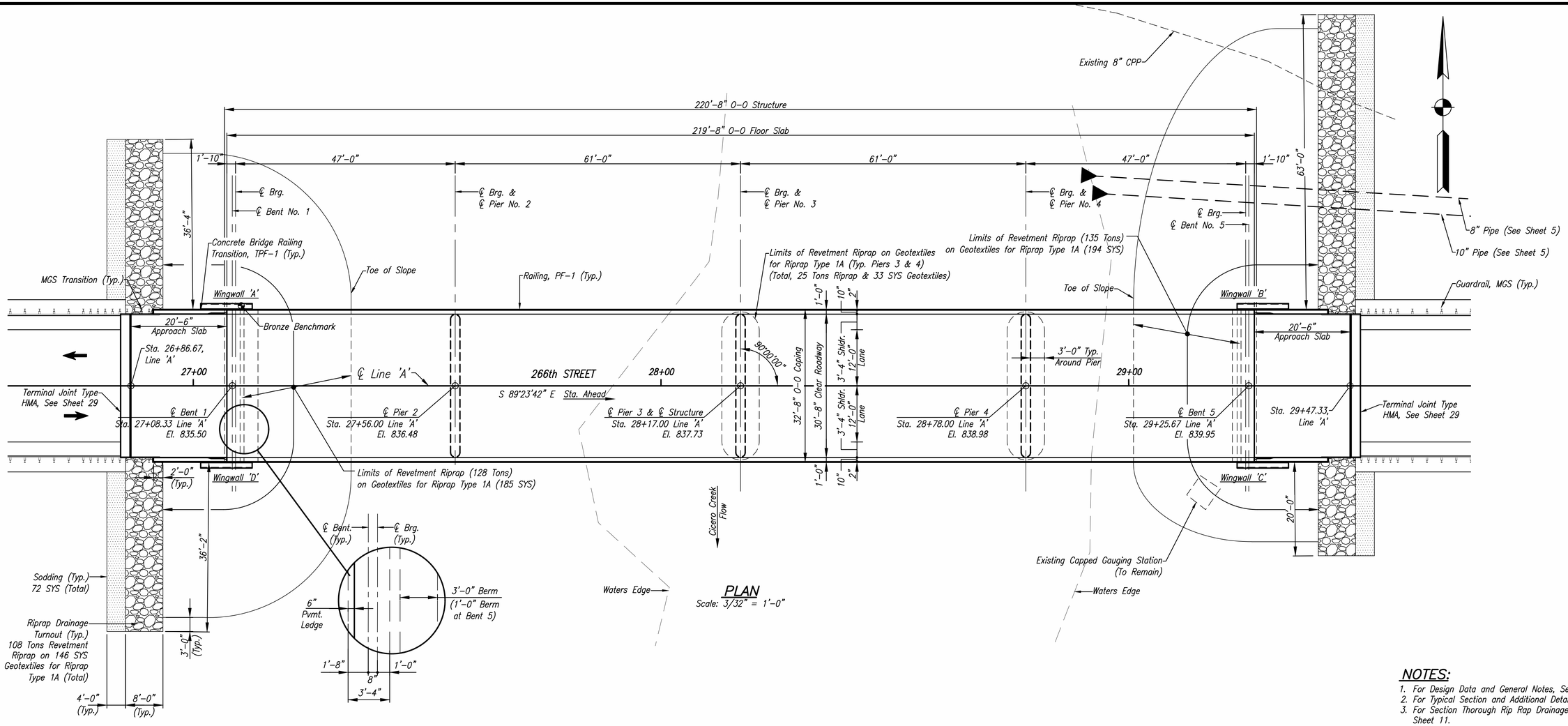

PLAN

Scale: 3/32" = 1'-0"

NOTES:

1. For Design Data and General Notes, See Sheet 11.
2. For Typical Section and Additional Details, See Sheet 11.
3. For Section Thorough Rip Rap Drainage Turnout, See Sheet 11.

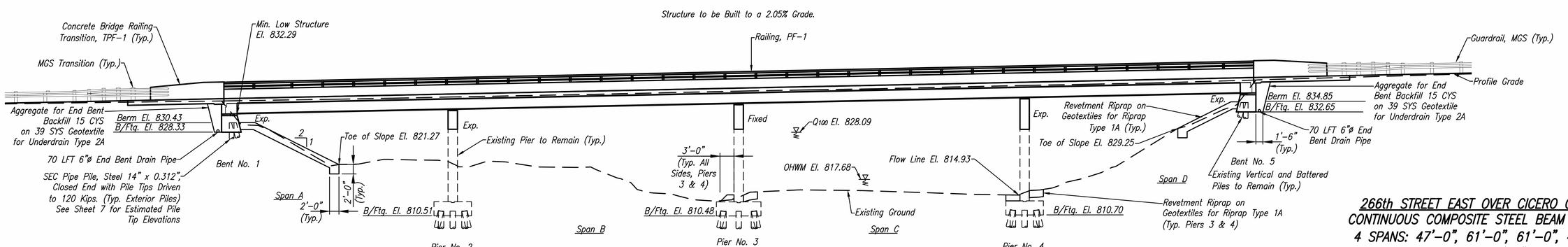

ELEVATION

Scale: 3/32" = 1'-0"

266th STREET EAST OVER CICERO CREEK
CONTINUOUS COMPOSITE STEEL BEAM BRIDGE
4 SPANS: 47'-0", 61'-0", 61'-0", 47'-0"
SKEW: 0°00'00"
30'-8" CLEAR ROADWAY

DLZ

HAMILTON COUNTY — INDIANA

HAMILTON COUNTY HIGHWAY DEPARTMENT

GENERAL PLAN

DRAWN: CJF	CHK'D. EAF	
DESIGNED: EAF	APPRV'D: DBH	
DATE: SEPTEMBER 1, 2021		
HORIZ. SCALE: AS NOTED		
VERT. SCALE:		
PROJECT NUMBER PB-18-0006 1863-2011-90		

NO.	REVISION	BY	DATE

DAVID B. HENKLE REGISTERED NO. 11300252 STATE OF INDIANA PROFESSIONAL ENGINEER

9/1/2021

DLZ INDIANA, LLC

SHEET 10 OF 37

DRAWING NUMBER 2011GP01

Date: September 02, 2021, 3:42pm
File: X:\Projects\GFL\2018\1863\201190 Hamilton #72\DWG\2011GP01.dwg Layout Tab: Layout

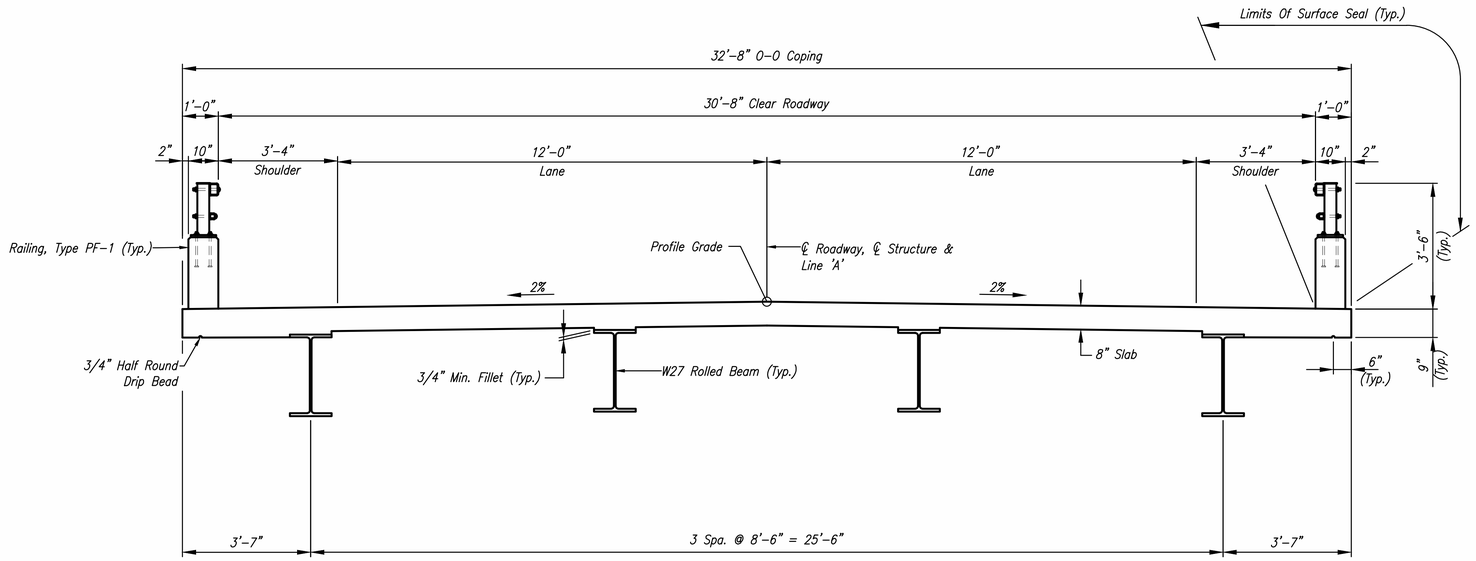

TYPICAL SECTION

Scale: 1/2" = 1'-0"

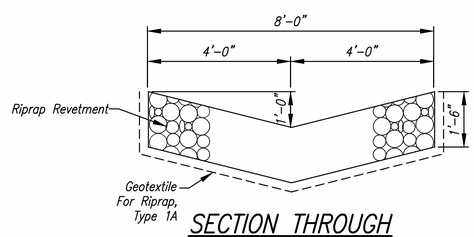

SECTION THROUGH RIPRAP DRAINAGE TURNOUT

N.T.S.

Originally Designed For H20-S16-44 Loading, in Accordance with The 1957 AASHO Specifications, Except Slab Designed for 16,000# Wheel Load.

Design Data for New Elements is as Follows:

DESIGN DATA

Allowable design stresses:

Reinforcing Steel (Grade 60)	fy= 60,000 psi
Structural Steel (Grade 50W)	fy= 50,000 psi
Class 'A' Concrete	f'c= 3,500 psi
Class 'C' Concrete	f'c= 4,000 psi

Live load:
Design for HS-20 Loading, in Accordance with AASHTO Standard Specifications for Highway Bridges 17th Edition, 2002 and its Subsequent Interims.

Dead load:
Actual dead plus 35 psf future wearing surface and 15 psf for permanent metal forms. The slab thickness consists of a 7 1/2" structural depth and a 1/2" wearing surface. Overall slab (8") consists of class 'C' concrete.

GENERAL NOTES

1. Reinforcing steel cover shall be 2 1/2" in top and 1" in bottom of floor slabs, 3" in footings except bottom steel which shall be 4" and 2" in all other parts unless otherwise noted.
2. 2018 Survey Elevations are Approximately Equal to 1958 Plan Elevations Minus 0.32 ft.
3. Plans for the existing structure are on file in the Hamilton County Highway Department.
4. Where new work is to be fitted to old work, the contractor shall check all dimensions and conditions in the field, report all errors and discrepancies to the engineer and assume responsibility for their correctness and the fit of the new part to the old.
5. Surface Seal shall be applied to the Bridge Barrier Rails Only. (Estimated Quantity = 2,600 sft)
6. The ends of the structural steel and appurtenances along with the bearing assemblies at Piers 2, 3 & 4 shall be painted in accordance with 619.11(b).

CONSTRUCTION LOADING

The exterior girder has been checked for strength, deflection, and overturning using the construction loads shown below. Cantilever overhang brackets were assumed for support of the deck overhang past the edge of the exterior girder. Finishing machine was assumed to be supported 6 in. outside the vertical coping form. The top overhang brackets were assumed to be located 6 in. past the edge of the vertical coping form. The bottom overhang brackets were assumed to be braced against the intersection of the girder bottom flange and web.

DECK FALSEWORK LOADS

Designed for 15 lb/ft^2 for permanent metal stay-in-place deck forms, removable deck forms, and 2-ft exterior walkway.

CONSTRUCTION LIVE LOAD

Designed for 20 lb/ft^2 extending 2 ft past the edge of coping and 75 lb/ft vertical force applied at a distance of 6 in. outside the face of coping over a 30-ft length of the deck centered with the finishing machine.

FINISHING-MACHINE LOAD

4500 lb distributed over 10 ft along the coping, applied at a distance of 6 In. outside the face of coping.

WIND LOAD

Designed for 70 mph horizontal wind loading in accordance with LRFD 3.8.1.

SEISMIC DESIGN DATA

Seismic Performance Zone	Zone 1
Acceleration Coefficient	< 0.15
Seismic Soil Profile Type	Class C

266th STREET EAST OVER CICERO CREEK
CONTINUOUS COMPOSITE STEEL BEAM BRIDGE
4 SPANS: 47'-0", 61'-0", 61'-0", 47'-0"
SKEW: 0°00'00"
30'-8" CLEAR ROADWAY

DLZ

HAMILTON COUNTY — HAMILTON COUNTY HIGHWAY DEPARTMENT — INDIANA

GENERAL PLAN

DRAWN: CJF	CHK'D. EAF
DESIGNED: EAF	APPRV'D: DBH
DATE: SEPTEMBER 1, 2021	
HORIZ. SCALE: AS NOTED	
VERT. SCALE:	
PROJECT NUMBER PB-18-0006 1863-2011-90	

NO.	REVISION	BY	DATE

DAVID B. HENKLE REGISTERED NO. 11300252 STATE OF INDIANA PROFESSIONAL ENGINEER
9/1/2021
DLZ INDIANA, LLC

SHEET 11 OF 37

DRAWING NUMBER 2011GP02

Date: September 02, 2021, 3:44pm
File: X:\Projects\GFL\2018\1863\201190 Hamilton #72\DWG\2011GP02.dwg Layout Tab: Layout1

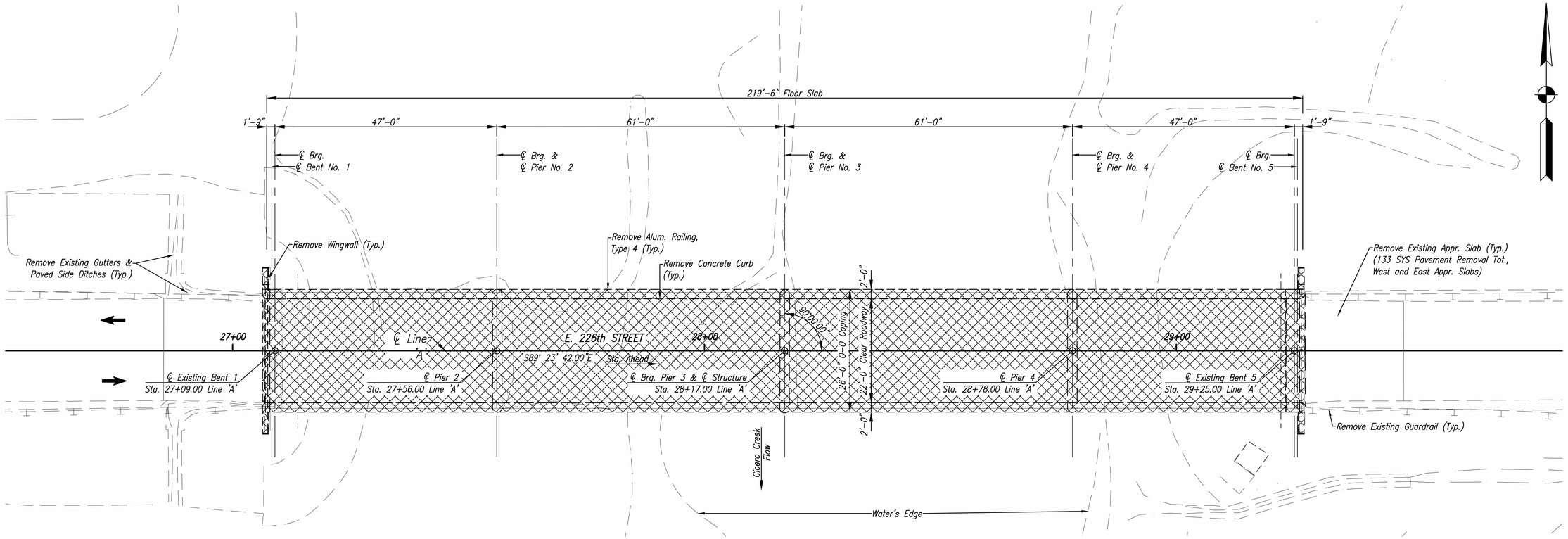

PLAN
Scale: 3/32" = 1'-0"

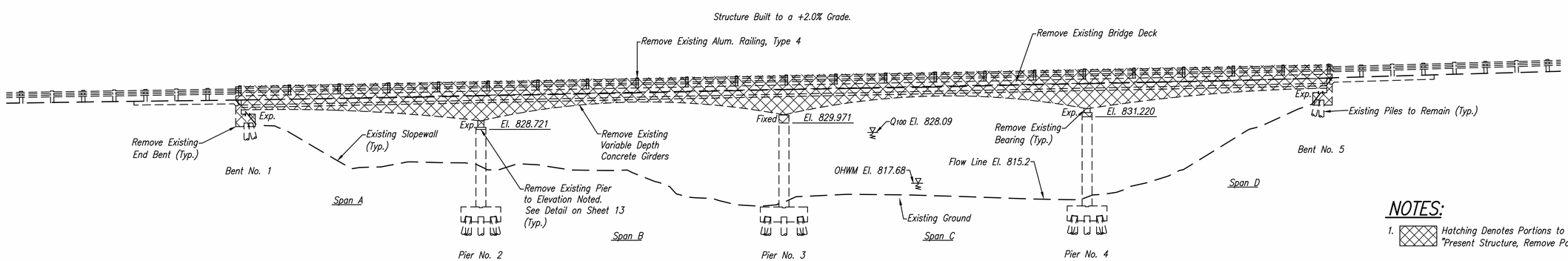

ELEVATION
Scale: 3/32" = 1'-0"

NOTES:

1. Hatching Denotes Portions to Be Removed, Paid for as "Present Structure, Remove Portions", Lump Sum.

DLZ

HAMILTON COUNTY INDIANA

HAMILTON COUNTY HIGHWAY DEPARTMENT

DEMOLITION PLAN

DRAWN: CJF	CHK'D. EAF		
DESIGNED: EAF	APPRV'D: DBH		
DATE: SEPTEMBER 1, 2021			
HORIZ. SCALE: 3/32" = 1'-0"			
VERT. SCALE:			
PROJECT NUMBER PB-18-0006 1863-2011-90			

NO.	REVISION	BY	DATE

DAVID B. HENKLE REGISTERED NO. 11300252 STATE OF INDIANA PROFESSIONAL ENGINEER

9/1/2021

DLZ INDIANA, LLC

SHEET 12 OF 37

DRAWING NUMBER 2011DP01

Date: September 02, 2021, 3:45pm
File: X:\Projects\GFL\2018\1863\201190 Hamilton #72\DWG\2011DP01.dwg Layout Tab: Layout

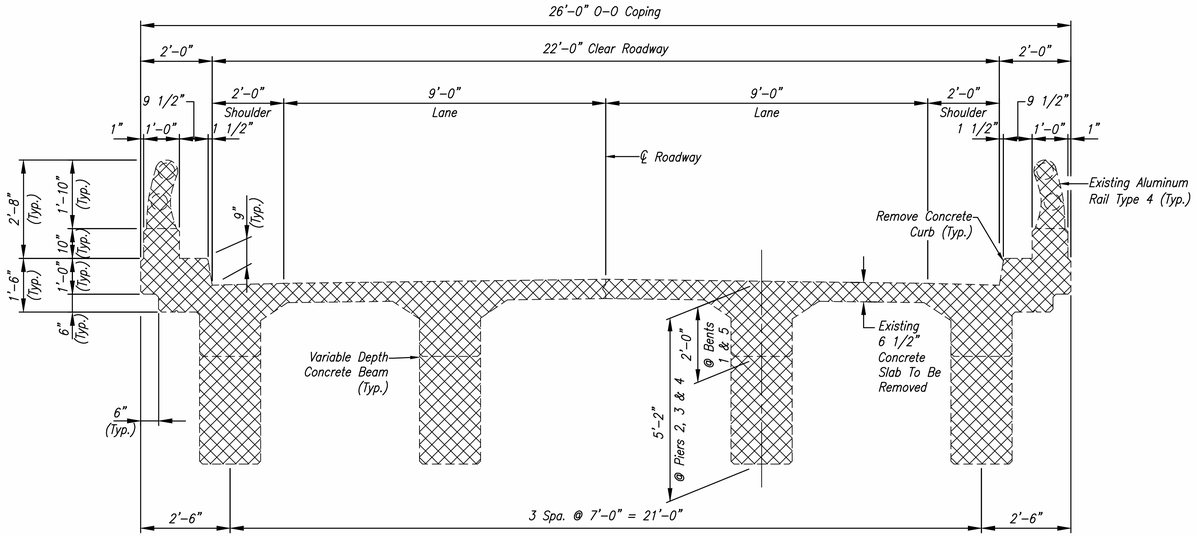

SECTION – SUPERSTRUCTURE REMOVAL

Scale: 1/2" = 1'-0"

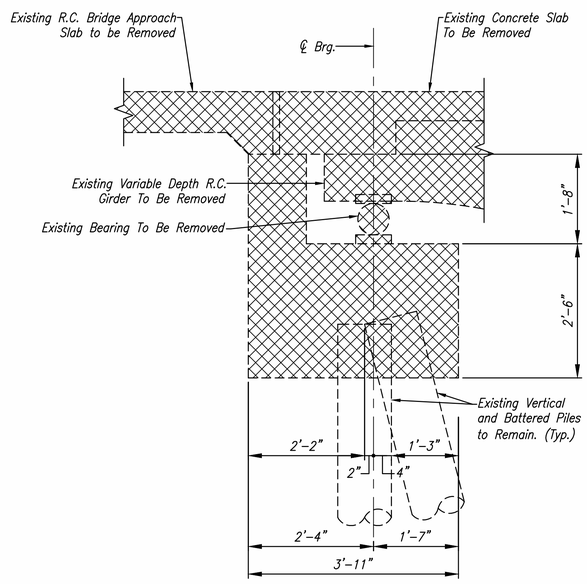

END BENT REMOVAL

Scale: 3/4" = 1'-0"

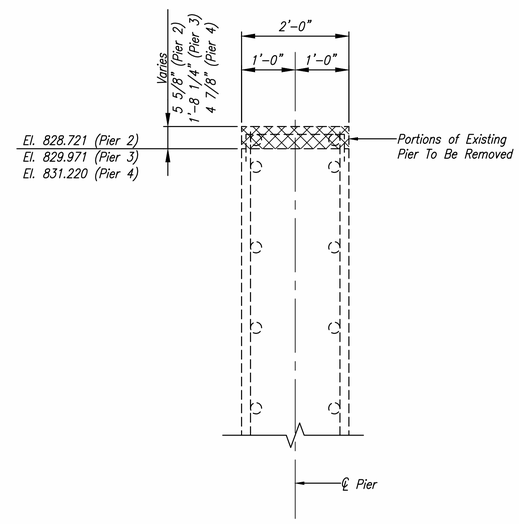

PIERS 2, 3 & 4 REMOVAL

Scale: 3/4" = 1'-0"

NOTES:

1. Hatching Denotes Portions to Be Removed, Paid for as "Present Structure, Remove Portions", Lump Sum.
2. See Sheet 12 for Plan, Elevation and Notes.

DLZ

HAMILTON COUNTY — HAMILTON COUNTY HIGHWAY DEPARTMENT — INDIANA

DEMOLITION DETAILS

DRAWN: CJF	CHK'D. EAF
DESIGNED: EAF	APPRV'D: DBH
DATE: SEPTEMBER 1, 2021	
HORIZ. SCALE: 1/2" = 1'-0"	
VERT. SCALE:	
PROJECT NUMBER PB-18-0006 1863-2011-90	

NO.	REVISION	BY	DATE

DAVID B. HENKLE REGISTERED NO. 11300252 STATE OF INDIANA PROFESSIONAL ENGINEER

9/1/2021

DLZ INDIANA, LLC

SHEET 13 OF 37

DRAWING NUMBER 2011DP02

Date: September 07, 2021, 10:45am
File: X:\Projects\GFL\2018\1863\201190 Hamilton #72\DWG\2011DP02.dwg Layout Tab: Layout1

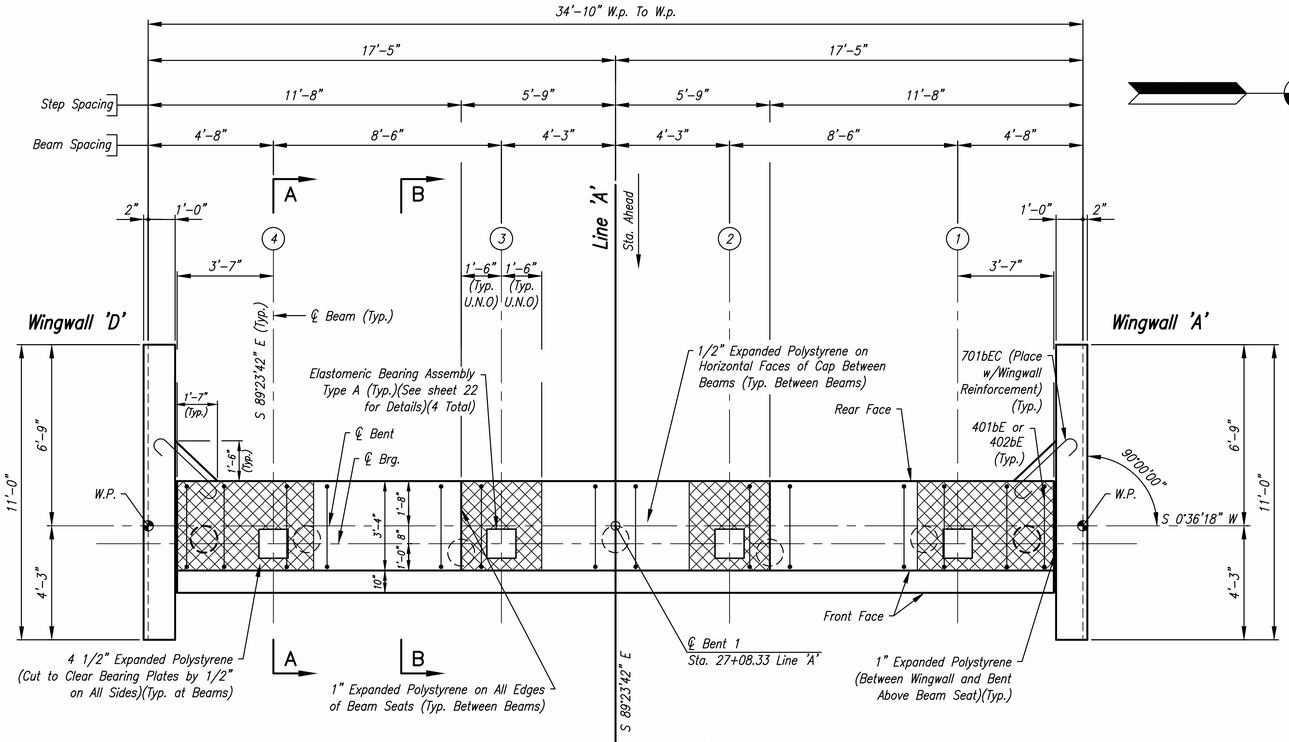

BENT 1 – CAP PLAN

Scale: 3/8" = 1'-0"

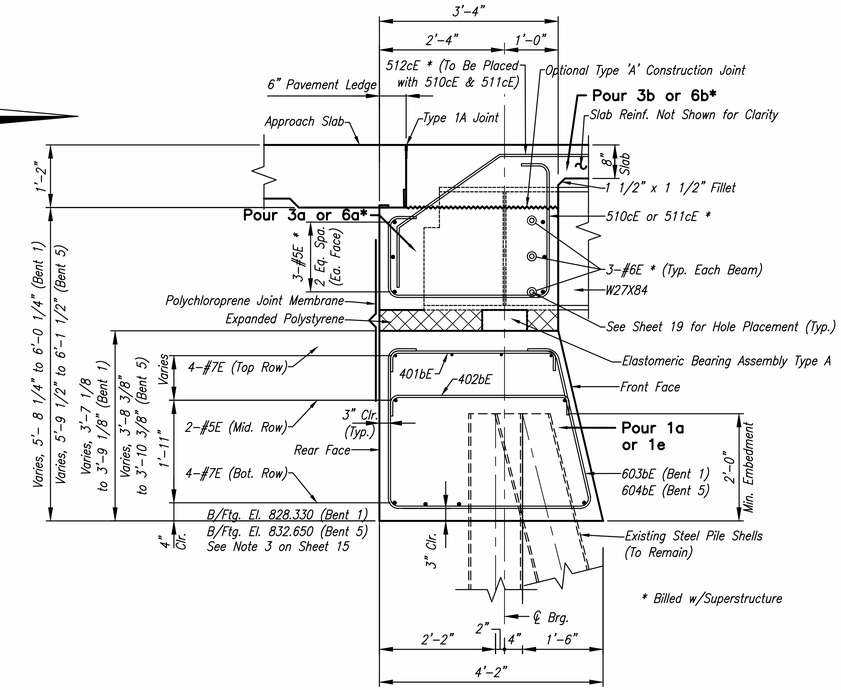

BENT 1 & 5 – SECTION A–A

Scale: 3/4" = 1'-0"

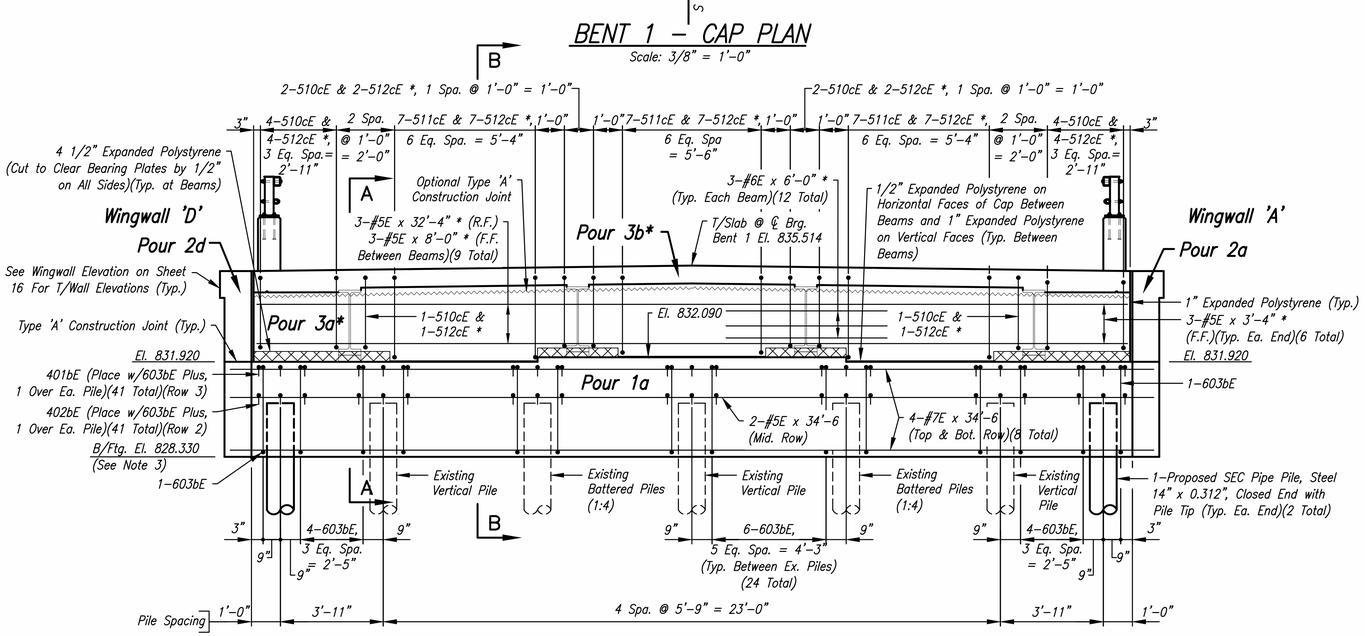

BENT 1 – ELEVATION

Scale: 3/8" = 1'-0"

* Billed w/Superstructure

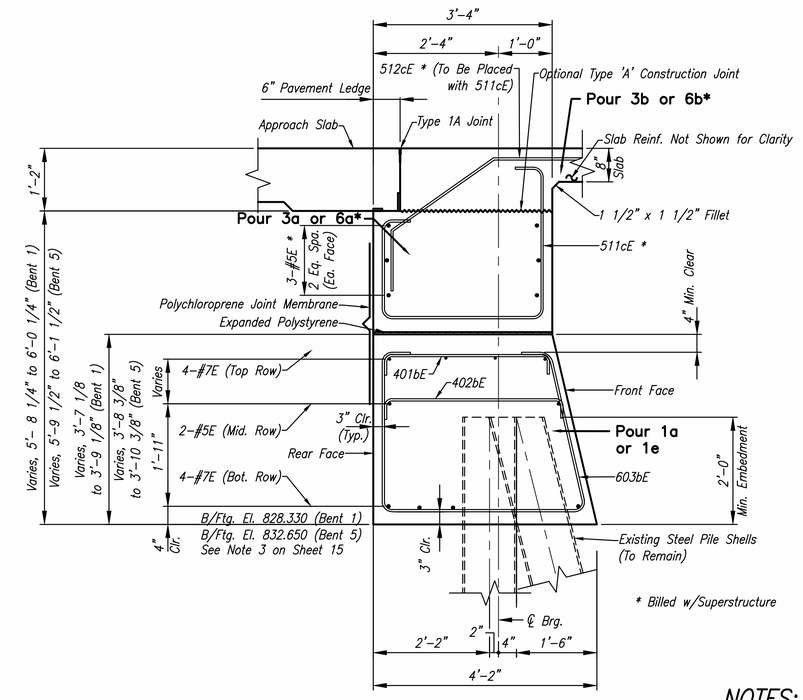

BENT 1 & 5 – SECTION B–B

Scale: 3/4" = 1'-0"

NOTES:

1. For Additional Notes, See Sheet 15.

DLZ

HAMILTON COUNTY INDIANA

HAMILTON COUNTY HIGHWAY DEPARTMENT

END BENT DETAILS

DRAWN: CJF	CHK'D. EAF		
DESIGNED: EAF	APPRV'D: DBH		
DATE: SEPTEMBER 1, 2021			
HORIZ. SCALE: AS NOTED			
VERT. SCALE:			
PROJECT NUMBER PB-18-0006 1863-2011-90			

NO.	REVISION	BY	DATE

DAVID B. HENKLE REGISTERED NO. 11300252 STATE OF INDIANA PROFESSIONAL ENGINEER

9/1/2021

DLZ INDIANA, LLC

SHEET 14 OF 37

DRAWING NUMBER 2011BT01

Date: September 02, 2021, 3:50pm
File: X:\Projects\GFL\2018\1863\201190 Hamilton #72\DWG\2011BT01.dwg Layout Tab: Layout1

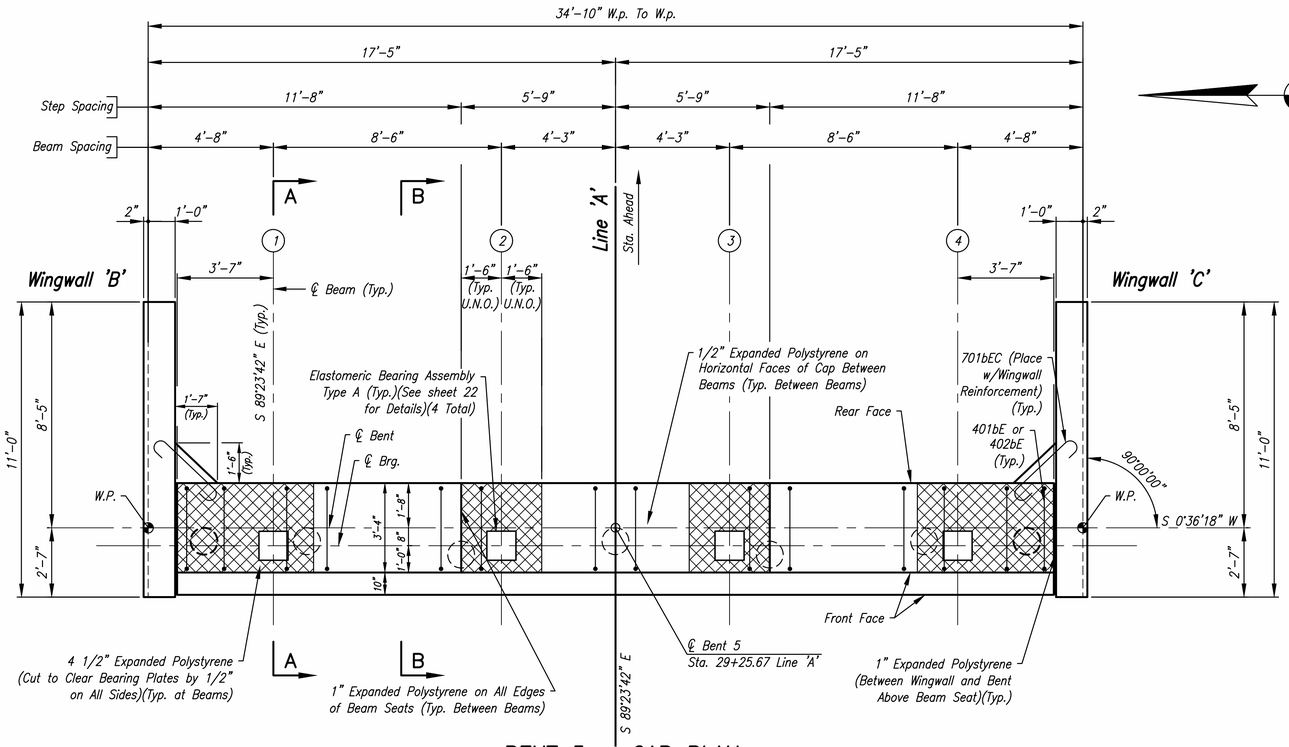

BENT 5 – CAP PLAN

Scale: 3/8" = 1'-0"

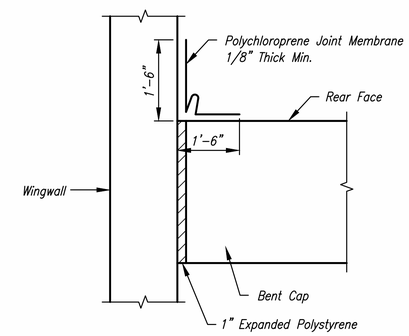

DETAIL C

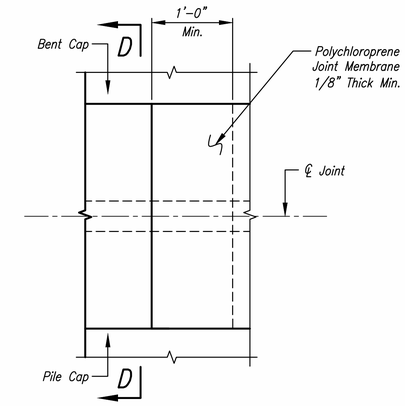

ELEVATION

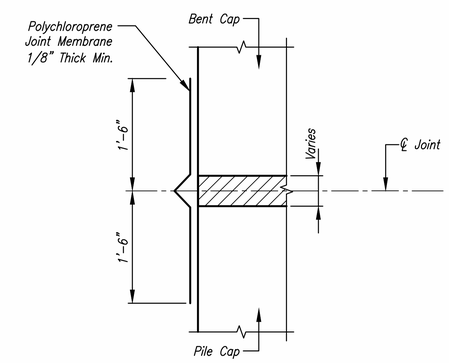

SECTION D–D

POLYCHLOROPRENE JOINT DETAILS

Scale: None

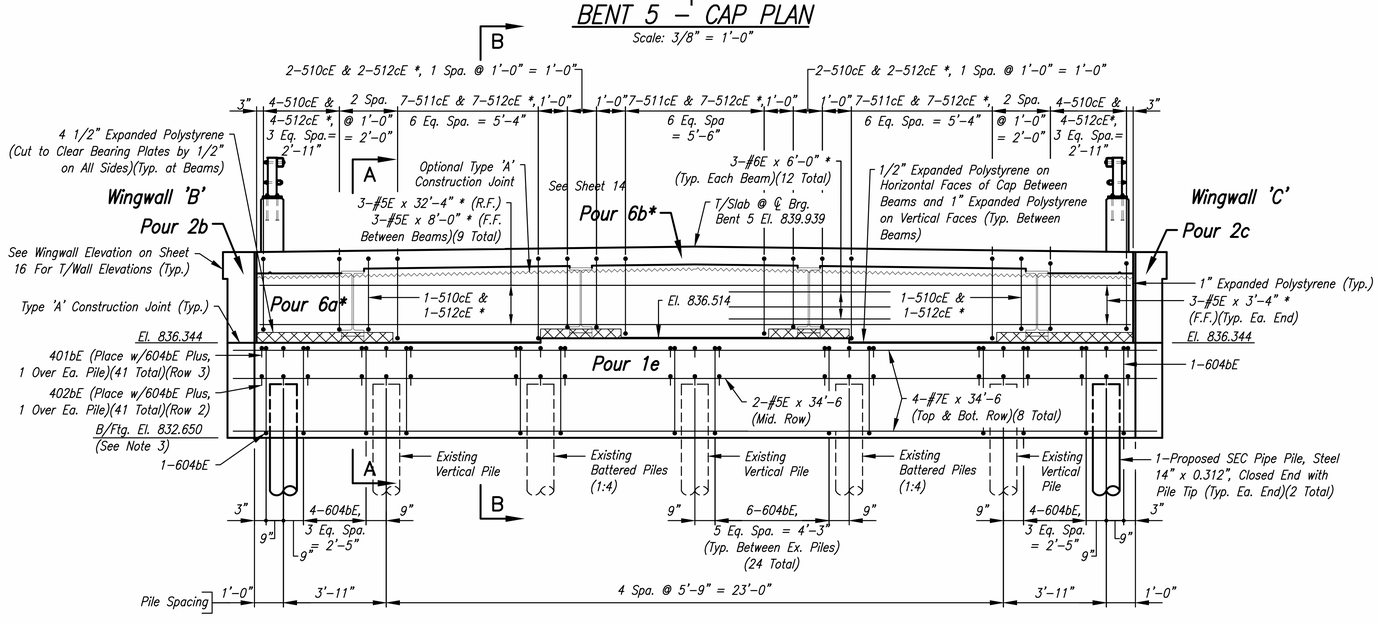

BENT 5 – ELEVATION

Scale: 3/8" = 1'-0"

* Billed w/Superstructure

NOTES:

1. For Design Data and General Notes, See Sheet 11.
2. For Reinforcing Bar Notes, See Standard Drawing No. E 703–BRST–01.
3. Bottom of Footing Elevation Shall be Field Verified so that a Min. 2'-0" Pile Embedment is Provided.
4. (#) Denotes Beam Reference Numbers.
5. For Type A Construction Joint, See Standard Drawing No. E 702–CJTA–01.
6. For Bar Bends, Bill of Materials, Wingwall Elevation and Additional Details See Sheets 14 & 16.

DLZ

HAMILTON COUNTY — HAMILTON COUNTY HIGHWAY DEPARTMENT — INDIANA

END BENT DETAILS

DRAWN: CJF	CHK'D. EAF
DESIGNED: EAF	APPRV'D: DBH
DATE: SEPTEMBER 1, 2021	
HORIZ. SCALE: AS NOTED	
VERT. SCALE:	
PROJECT NUMBER PB-18-0006 1863-2011-90	

NO.	REVISION	BY	DATE

DAVID B. HENKLE REGISTERED NO. 11300252 STATE OF INDIANA PROFESSIONAL ENGINEER

9/1/2021

DLZ INDIANA, LLC

SHEET 15 OF 37

DRAWING NUMBER 2011BT01

Date: September 02, 2021, 3:52pm
File: X:\Projects\GFL\2018\1863\201190 Hamilton #72\DWG\2011BT01.dwg Layout Tab: Layout 2

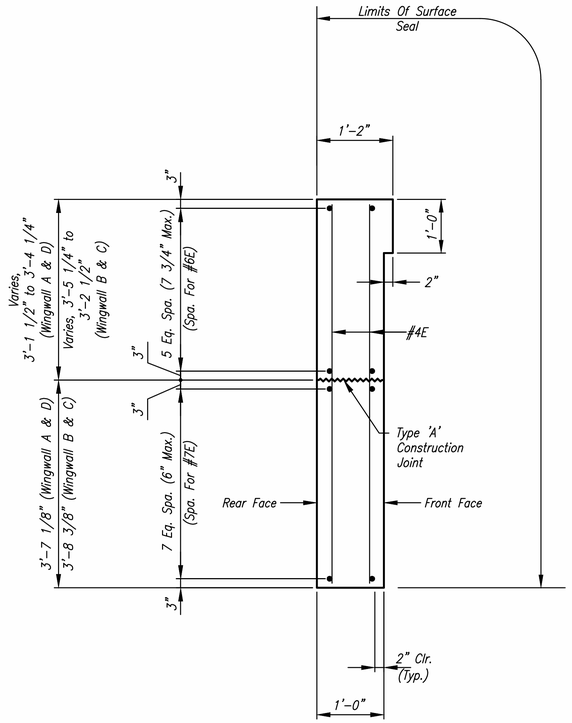

SECTION C–C

Scale: None

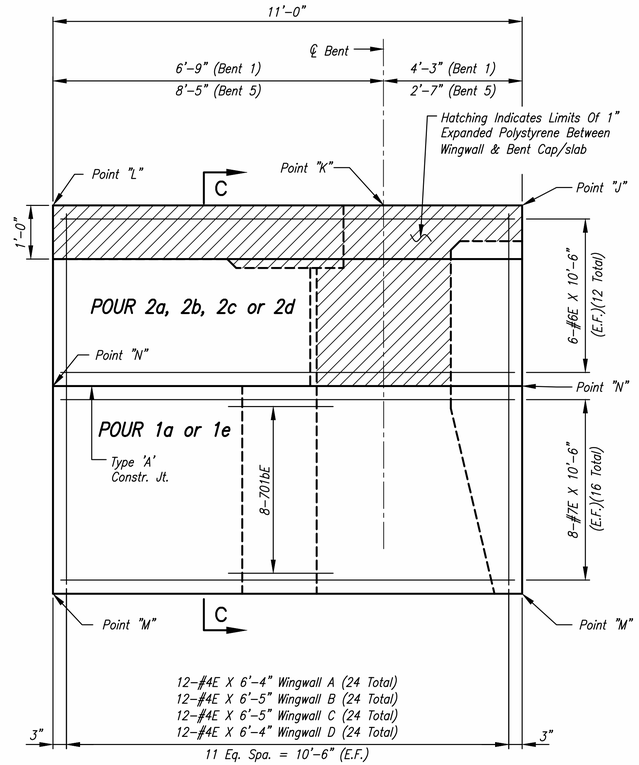

ELEVATION WINGWALL

Scale: None

Point / WING	"J"	"K"	"L"	"M"	"N"
WING A	835.273	835.186	835.048	828.330	831.920
WING B	839.557	839.610	839.783	832.650	836.344
WING C	839.557	839.610	839.783	832.650	836.344
WING D	835.273	835.186	835.048	828.330	831.920

WINGWALL ELEVATION TABLE

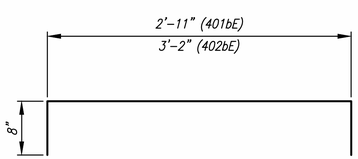

401bE X 4'-3"
402bE X 4'-6"

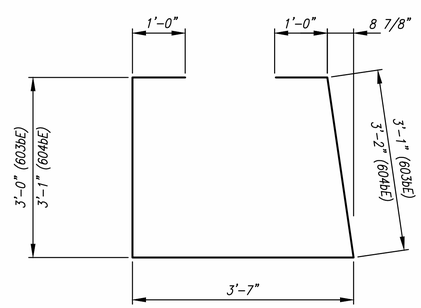

603bE X 11'-8"
604bE X 11'-10"

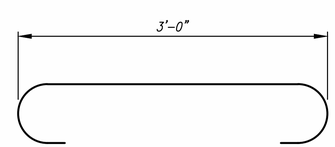

701bE X 4'-8"

NOTES:

1. For General Notes, See Sheet 11.
2. For Reinforcing Bar Notes, See Standard Drawing No. E 703–BRST–01.
3. Bottom of Footing Elevation Shall Be Field Verified So That a Min. 2'–0" Pile Embedment is Provided.
4. For Type A Construction Joint, See Standard Drawing E 702–CJTA–01.

BILL OF MATERIALS
BENT 1
EPOXY COATED REINF. BARS

MARK / SIZE	NO. REQ'D	LENGTH	WEIGHT (Lbs)
701bE	16	4'- 8"	
#7E	8	34'- 6"	
#7E	32	10'- 6"	
Total #7E Bars			1404
603bE	34	11'- 8"	
#6E	24	10'- 6"	
Total #6E Bars			974
#5E	2	34'- 6"	
Total #5E Bars			72
401bE	41	4'- 3"	
402bE	41	4'- 6"	
#4E	48	6'- 4"	
Total #4E Bars			443
Total Reinf. Bars, Epoxy Coated			**2893**

CONCRETE, C, SUBSTRUCTURE

Location	CYS
Pour 1a	19.6
Pour 2a	1.4
Pour 2d	1.4
Total Concrete, C, Substructure	22.4

MISCELLANEOUS

2-Pile, Steel Pipe, 0.312in., 14in. (Est. 33LFT Each)	66 LFT
Conical Pile Tip, 14in.	2 EACH
Aggregate for End Bent Backfill	15 CYS
Geotextile for Underdrain Type 2A	39 SYS
Pipe, End Bent Drain, 6in.	70 LFT

BILL OF MATERIALS
BENT 5
EPOXY COATED REINF. BARS

MARK / SIZE	NO. REQ'D	LENGTH	WEIGHT (Lbs)
701bE	16	4'- 8"	
#7E	8	34'- 6"	
#7E	32	10'- 6"	
Total #7E Bars			1404
604bE	34	11'- 10"	
#6E	24	10'- 6"	
Total #6E Bars			983
#5E	2	34'- 6"	
Total #5E Bars			72
401bE	41	4'- 3"	
402bE	41	4'- 6"	
#4E	48	6'- 5"	
Total #4E Bars			445
Total Reinf. Bars, Epoxy Coated			**2904**

CONCRETE, C, SUBSTRUCTURE

Location	CYS
Pour 1e	20.2
Pour 2b	1.5
Pour 2c	1.5
Total Concrete, C, Substructure	23.2

MISCELLANEOUS

2-Pile, Steel Pipe, 0.312in., 14in. (Est. 37LFT Each)	74 LFT
Conical Pile Tip, 14in.	2 EACH
Aggregate for End Bent Backfill	15 CYS
Geotextile for Underdrain Type 2A	39 SYS
Pipe, End Bent Drain, 6in.	70 LFT

DLZ

HAMILTON COUNTY — INDIANA

HAMILTON COUNTY HIGHWAY DEPARTMENT

END BENT DETAILS

DRAWN: CJF CHK'D. EAF
DESIGNED: EAF APPRV'D: DBH
DATE: SEPTEMBER 1, 2021
HORIZ. SCALE: AS NOTED
VERT. SCALE:
PROJECT NUMBER PB-18-0006 1863-2011-90

NO.	REVISION	BY	DATE

DAVID B. HENKLE REGISTERED NO. 11300252 STATE OF INDIANA PROFESSIONAL ENGINEER
9/1/2021
DLZ INDIANA, LLC

SHEET 16 OF 37

DRAWING NUMBER 2011BT01

Date: September 02, 2021, 3:52pm
File: X:\Projects\GFL\2018\1863\201190 Hamilton #72\DWG\2011BT01.dwg Layout Tab: Layout 3

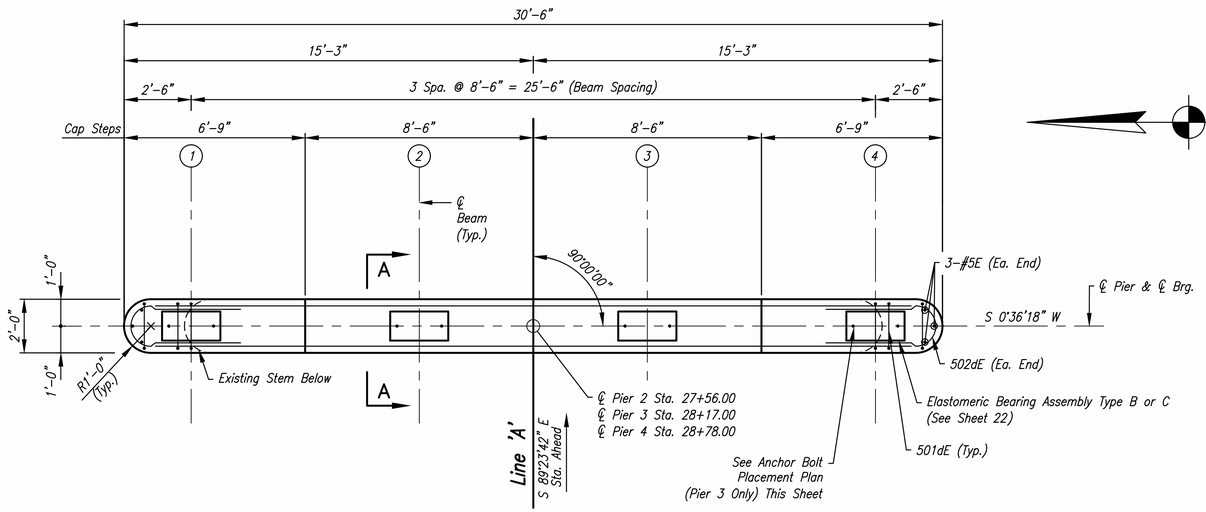

PIERS 2, 3 & 4 – CAP PLAN

Scale: 3/8" = 1'-0"

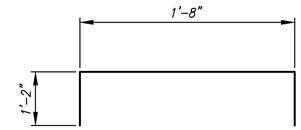

501dE x 4'-0"

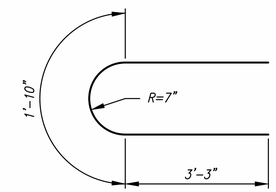

502dE x 8'-4"

BILL OF MATERIALS			
PIER 2 (PIERS 3 & 4 SIMILAR U.N.O)			
REINFORCING BARS			
MARK / SIZE	NO. REQ'D	LENGTH	WEIGHT (Lbs)
501dE	120	4'- 0"	
502dE	8	8'- 4"	
#5E	8	28'- 6"	
#5E	2	26'- 0"	
#5E	74	4'- 4"	
#5E	16	3'- 4"	
#5E	6	3'- 2"	
Total #5E Bars			1272
Total Reinf. Bars, Epoxy Coated			**1272**
CONCRETE, A, SUBSTRUCTURE			
Location			CYS
Pour 1b (Pour 1c for Pier 3, Pour 1d for Pier 4)			8.9
Total (One Pier) Concrete, A, Substructure			8.9
MISCELLANEOUS			
Field Drilled Hole in Concrete			74 EACH

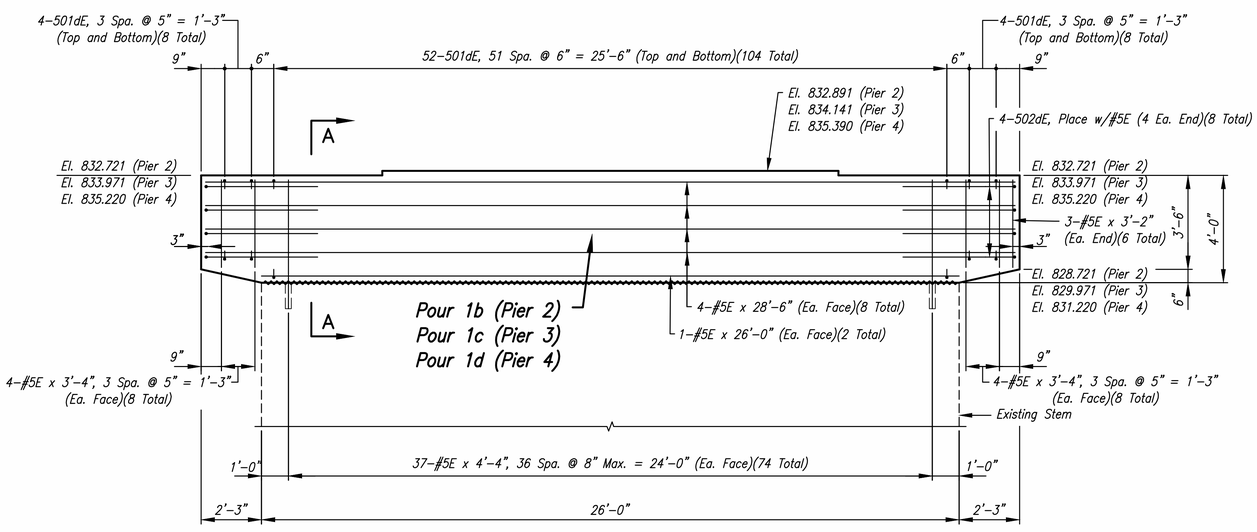

PIERS 2, 3 & 4 – ELEVATION

Scale: 3/8" = 1'-0"

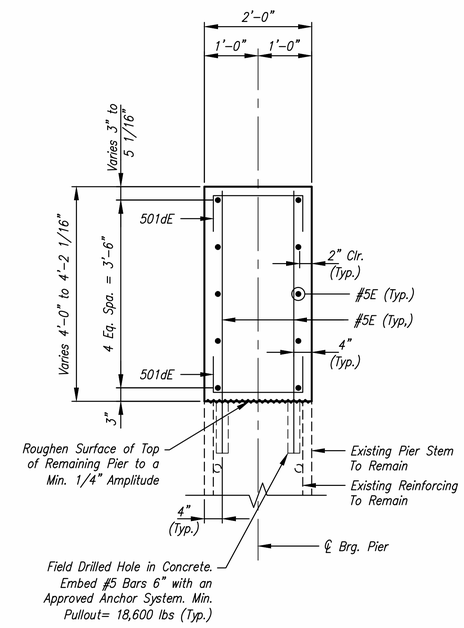

PIERS 2, 3 & 4 – SECTION A-A

Scale: 3/4" = 1'-0"

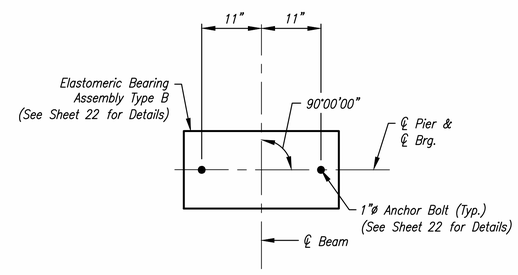

ANCHOR BOLT PLACEMENT PLAN (PIER 3 ONLY)

SCALE: 1" = 1'-0"

NOTES:

1. For Design Data and General Notes, See Sheet 11.
2. For Reinforcing Bar Notes, See Standard Drawing No. E 703-BRST-01.
3. (#) Denotes Beam Reference Numbers.

DLZ

HAMILTON COUNTY — HAMILTON COUNTY HIGHWAY DEPARTMENT — INDIANA

PIER DETAILS

DRAWN: CJF CHK'D. NWB
DESIGNED: NWB APPRV'D: DBH
DATE: SEPTEMBER 1, 2021
HORIZ. SCALE: AS NOTED
VERT. SCALE:
PROJECT NUMBER PB-18-0006 1863-2011-90

NO.	REVISION	BY	DATE

DAVID B. HENKLE REGISTERED NO. 11300252 STATE OF INDIANA PROFESSIONAL ENGINEER
9/1/2021
DLZ INDIANA, LLC

SHEET 17 OF 37
DRAWING NUMBER 2011PD01

Date: September 07, 2021, 10:47am Layout Tab: Layout1
File: X:\Projects\GFL\2018\1863\201190 Hamilton #72\DWG\2011PD01.dwg

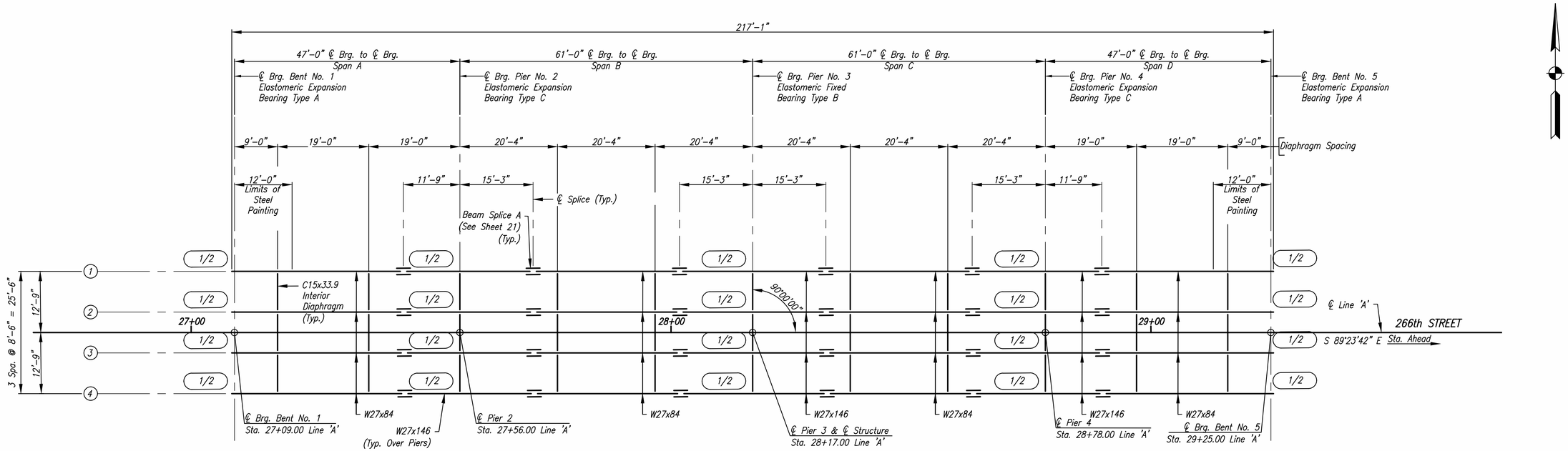

FRAMING PLAN

Scale: 3/32" = 1'-0"

NOTES:

1. For General Notes, See Sheet 11.
2. ( ) Indicates Shim Depth Required in Inches at ℄ Brg. (± 1/16" tolerance).
3. (#) Indicates Beam Number.
4. See Sheet 19 for Diaphragm Details.
5. For Sections and Additional Details, See Sheets 19 thru 22.
6. All Bolts Shall be ASTM A325 Type 1, 7/8"ø High Strength with 15/16"ø Open Holes, Unless Noted.
7. For Bearing Details, See Sheet 22.
8. Estimated Weight of Structural Steel is 108,195 lbs (A 709 Grade 50) (Includes Weight of Beams, Diaphragms and Connection Plates, Anchorage Stiffeners, Splices, and Top Plates).
9. Estimated Weight of Structural Steel for Bearings is 1,335 lbs (A709 Grade 36) (Includes Weight of Shims).

DLZ

HAMILTON COUNTY — INDIANA

HAMILTON COUNTY
HIGHWAY DEPARTMENT

STRUCTURAL STEEL DETAILS

DRAWN: CJF	CHK'D. EAF		
DESIGNED: EAF	APPRV'D: DBH		
DATE: SEPTEMBER 1, 2021			
HORIZ. SCALE: AS NOTED			
VERT. SCALE:			
PROJECT NUMBER PB-18-0006 1863-2011-90			

NO.	REVISION	BY	DATE
△			
△			
△			
△			
△			
△			
△			

DAVID B. HENKLE
REGISTERED
NO. 11300252
STATE OF INDIANA
PROFESSIONAL ENGINEER

9/1/2021

DLZ INDIANA, LLC

SHEET 18
OF 37

DRAWING NUMBER
2011SD01

Date: September 02, 2021, 3:56pm
File: X:\Projects\GFL\2018\1863\201190 Hamilton #72\DWG\2011SD01.dwg Layout Tab: Layout

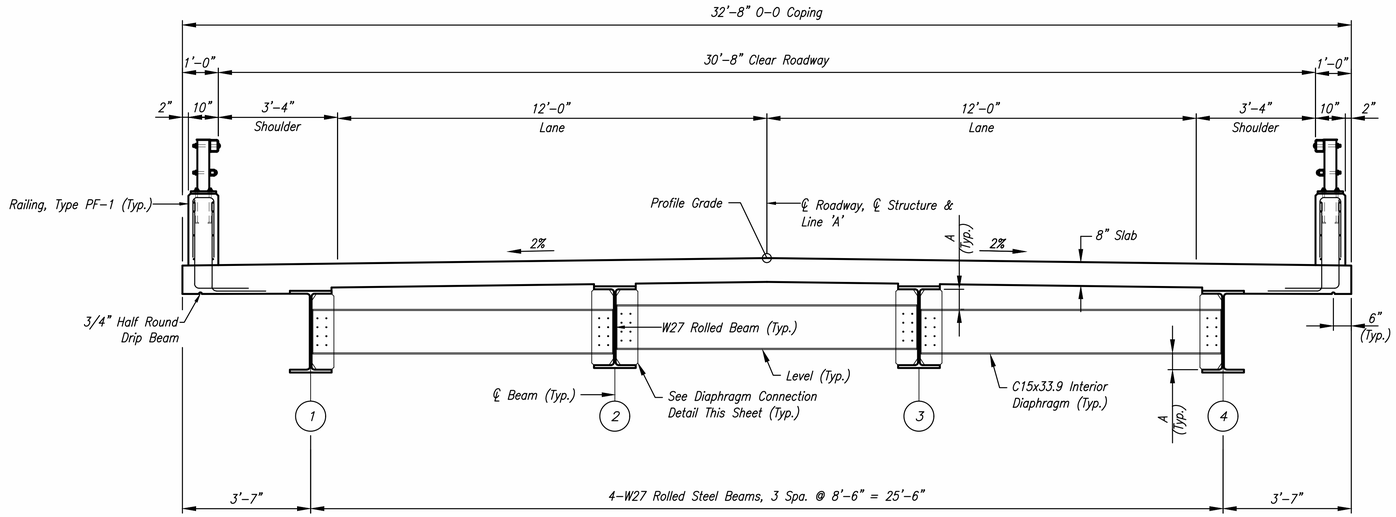

NOTE: Interior Diaphragm to Be Erected so That Dimension 'A' (Top & Bottom) Are Equal

SECTION THRU INTERIOR DIAPHRAGMS

Scale: 1/2" = 1'-0"

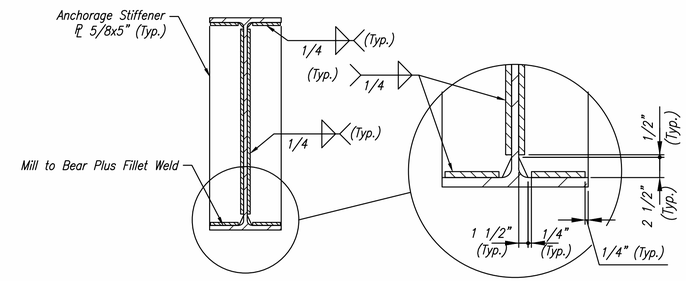

CONNECTION PLATE STIFFENER DETAIL

Scale: None

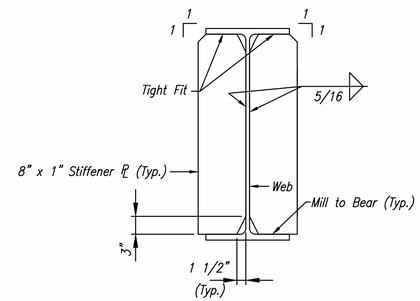

SECTION AT PIER BEARING STIFFENER

Scale: None

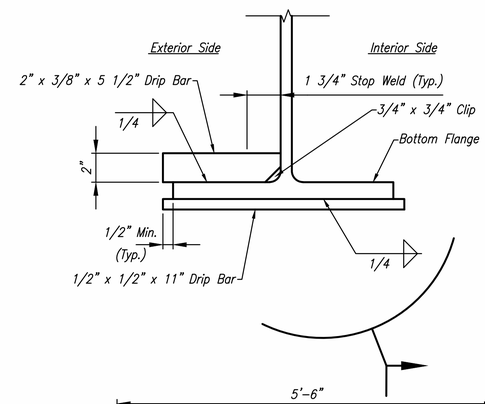

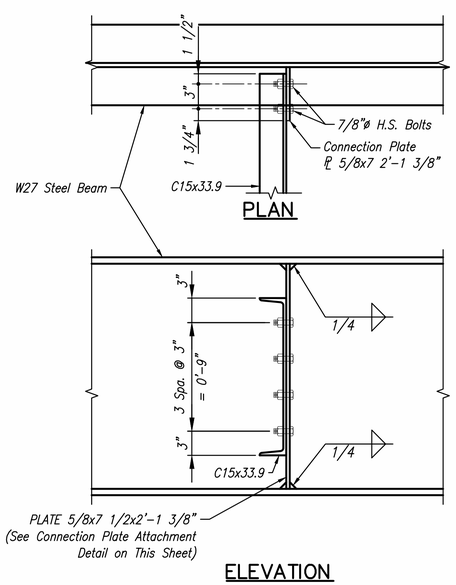

PLAN

ELEVATION

DIAPHRAGM CONNECTION DETAIL

Scale: None

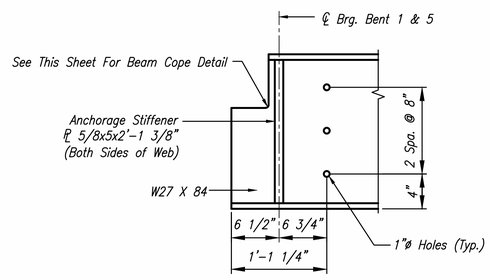

BEAM END DETAIL

Scale: None

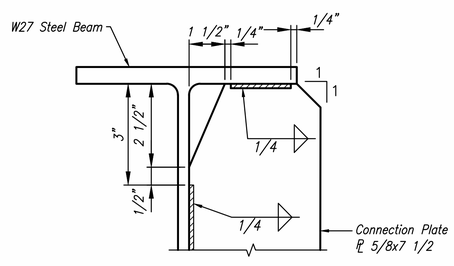

CONNECTION PLATE ATTACHMENT DETAIL

Scale: None

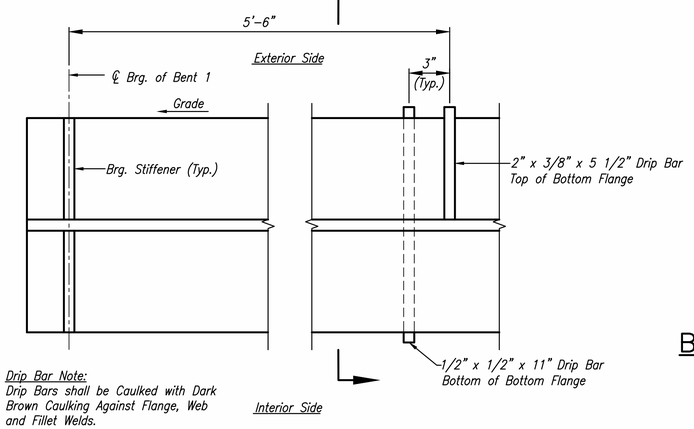

Drip Bar Note:
Drip Bars shall be Caulked with Dark Brown Caulking Against Flange, Web and Fillet Welds.

DRIP BAR DETAILS – BEAMS 1 & 4

Scale: None

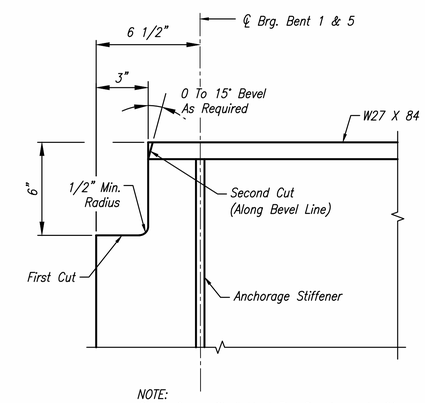

NOTE:
Beam Copes Shall Meet The Requirements Of AASHTO/AWS D1.5 3.2.5

BEAM COPE DETAIL AT END BENTS

Scale: None

NOTE:
1. All Bolts Are 7/8"ø ASTM A325 H.S. Bolts Unless Otherwise Noted. All Bolts Holes Shall Be 15/16" Unless Otherwise Noted.

DLZ

HAMILTON COUNTY — HAMILTON COUNTY HIGHWAY DEPARTMENT — INDIANA

STRUCTURAL STEEL DETAILS

DRAWN: CJF	CHK'D. EAF		
DESIGNED: EAF	APPRV'D: DBH		
DATE: SEPTEMBER 1, 2021			
HORIZ. SCALE: AS NOTED			
VERT. SCALE:			
PROJECT NUMBER PB-18-0006 1863-2011-90			

NO.	REVISION	BY	DATE

DAVID B. HENKLE REGISTERED NO. 11300252 STATE OF INDIANA PROFESSIONAL ENGINEER

9/1/2021

DLZ INDIANA, LLC

SHEET 19 OF 37

DRAWING NUMBER 2011SD02

Date: September 02, 2021, 3:57pm
File: X:\Projects\GFL\2018\1863\201190 Hamilton #72\DWG\2011SD02.dwg Layout Tab: Layout1

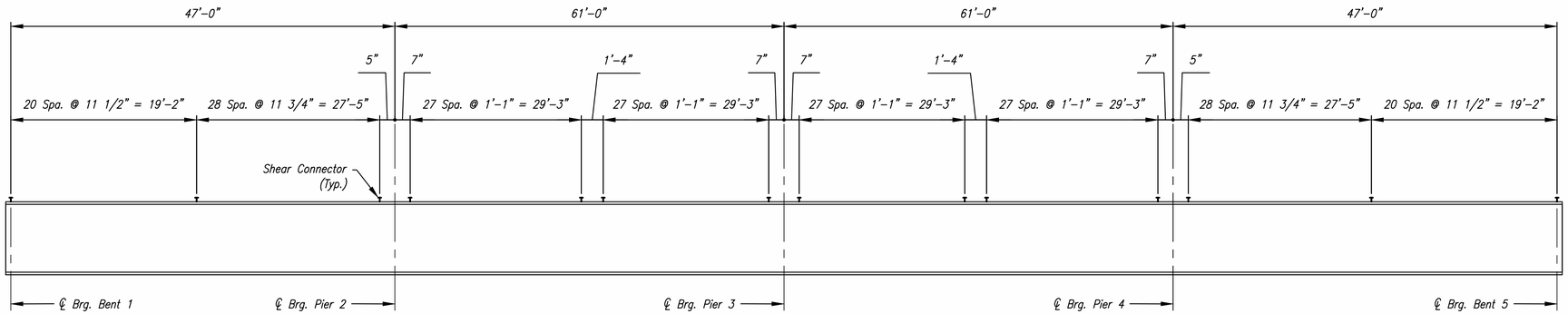

SHEAR CONNECTOR DIAGRAM

Scale: None

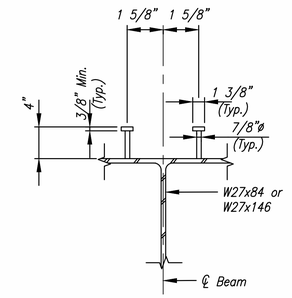

The Contractor May Elect To Use Channels Or 3/4"ø Studs As An Alternate Shear Connector. If Used They Shall Have Equivalent Shear Value And The Proposed Size And Spacing Submitted For Approval.

STUD SHEAR CONNECTOR DETAIL

Scale: None

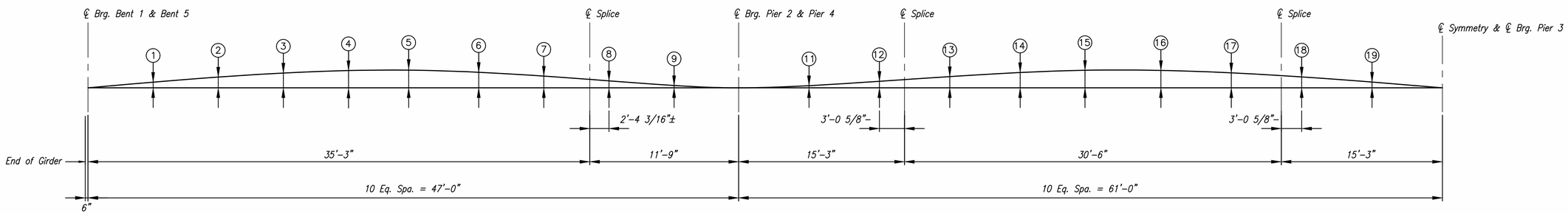

CONCRETE DEAD LOAD DEFLECTIONS

Not to Scale

TABLE OF CAMBERS (IN INCHES) – EXTERIOR GIRDERS 1 & 4

LOCATION	℄ Brg. Bent 1 & 5	1	2	3	4	5	6	7	8	9	℄ Brg. Pier 2 & 4	11	12	13	14	15	16	17	18	19	℄ Summetry & Brg. Pier 3
DEAD LOAD – STEEL	0.00	0.01	0.03	0.03	0.04	0.04	0.03	0.02	0.01	0.00	0.00	0.02	0.04	0.07	0.09	0.09	0.08	0.06	0.04	0.01	0.00
DEAD LOAD – SLAB AND FORMS	0.00	0.24	0.44	0.57	0.61	0.57	0.45	0.30	0.16	0.04	0.00	0.09	0.28	0.50	0.68	0.74	0.67	0.49	0.27	0.08	0.00
DEAD LOAD – RAILING	0.00	0.03	0.06	0.08	0.09	0.08	0.07	0.05	0.02	0.01	0.00	0.02	0.05	0.08	0.11	0.12	0.11	0.08	0.04	0.01	0.00
TOTAL – DEAD LOAD	0.00	0.28	0.53	0.68	0.74	0.61	0.55	0.37	0.19	0.05	0.00	0.14	0.37	0.65	0.88	0.95	0.86	0.63	0.35	0.10	0.00

TABLE OF CAMBERS (IN INCHES) – INTERIOR GIRDERS 2 & 3

LOCATION	℄ Brg. Bent 1 & 5	1	2	3	4	5	6	7	8	9	℄ Brg. Pier 2 & 4	11	12	13	14	15	16	17	18	19	℄ Summetry & Brg. Pier 3
DEAD LOAD – STEEL	0.00	0.03	0.06	0.08	0.08	0.08	0.06	0.04	0.02	0.01	0.00	0.01	0.04	0.08	0.10	0.11	0.10	0.07	0.04	0.01	0.00
DEAD LOAD – SLAB AND FORMS	0.00	0.17	0.30	0.39	0.42	0.39	0.31	0.21	0.11	0.03	0.00	0.06	0.19	0.34	0.46	0.50	0.46	0.34	0.19	0.06	0.00
DEAD LOAD – RAILING	0.00	0.02	0.03	0.04	0.04	0.04	0.04	0.02	0.01	0.00	0.00	0.02	0.05	0.07	0.09	0.10	0.09	0.07	0.04	0.01	0.00
TOTAL – DEAD LOAD	0.00	0.22	0.39	0.51	0.54	0.51	0.41	0.27	0.14	0.04	0.00	0.09	0.28	0.49	0.55	0.60	0.54	0.40	0.23	0.07	0.00

DLZ

HAMILTON COUNTY — INDIANA

HAMILTON COUNTY
HIGHWAY DEPARTMENT

STRUCTURAL STEEL DETAILS

DRAWN: DPH CHK'D. JFM
DESIGNED: EAF APPRV'D: DBH
DATE: SEPTEMBER 1, 2021
HORIZ. SCALE: AS NOTED
VERT. SCALE:
PROJECT NUMBER
PB-18-0006
1863-2011-90

NO.	REVISION	BY	DATE

DAVID B. HENKLE REGISTERED NO. 11300252 STATE OF INDIANA PROFESSIONAL ENGINEER
9/1/2021
DLZ INDIANA, LLC

SHEET 20
OF 37
DRAWING NUMBER
2011SD02

Date: August 30, 2021, 8:24pm
File: X:\Projects\GFL\2018\1863\201190 Hamilton #72\DWG\2011SD02.dwg Layout Tab: Layout1 (2)

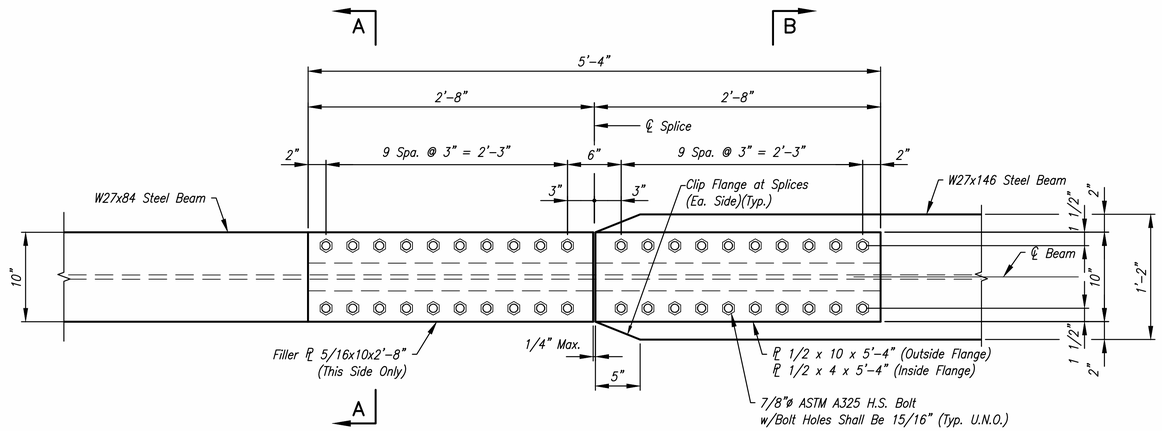

TOP & BOTTOM FLANGE PLAN

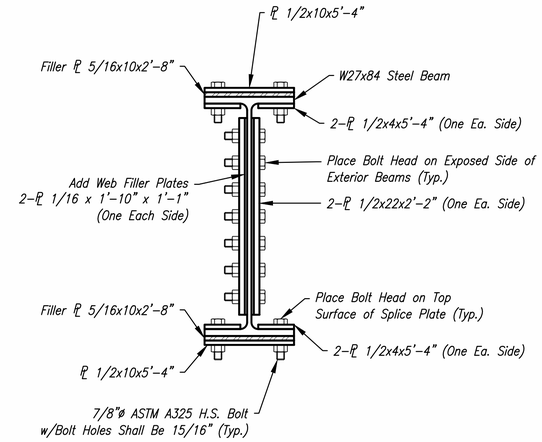

SECTION A–A

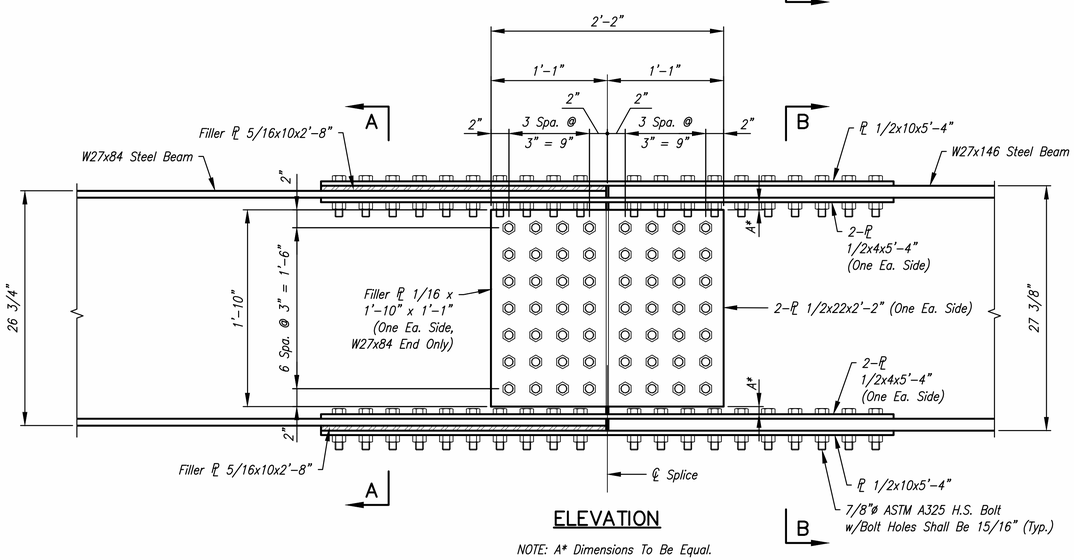

ELEVATION

NOTE: A* Dimensions To Be Equal.

BEAM SPLICE

Scale: 1 1/2" = 1'-0"

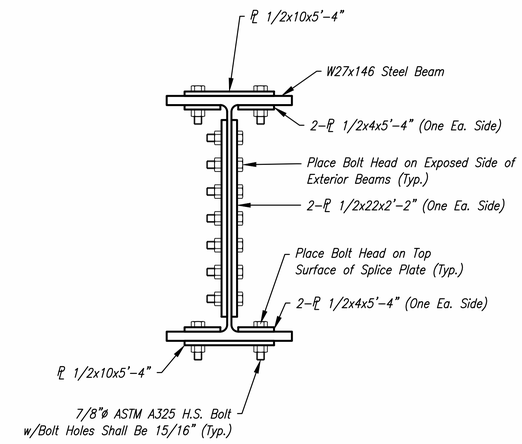

SECTION B–B

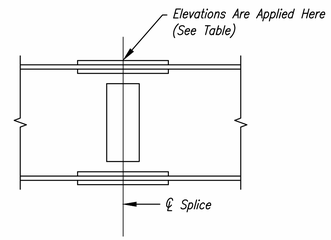

Note: the Above Elevations Are With Falsework Removed And Carrying Steel Dead Load Only.

Note To Erector

All Structural Steel Shall Be Erected And Beams Adjusted To Their True Elevations Before Bolting Field Splices. The Elevation Shall Be Checked With Splices Connected By Full Size Drift Pins And Erection Bolts And With Beams Unsupported By Any Falsework.

TABLE OF ELEVATION FOR TOP OF BEAM SPLICE						
CL OF BEAM SPLICE						
Station	27+44.250	27+71.250	28+01.750	28+32.250	28+62.750	28+89.750
CL Beam 1	835.133	835.686	836.311	836.935	837.560	838.113
CL Beam 2	835.303	835.856	836.481	837.105	837.730	838.283
CL Beam 3	835.303	835.856	836.481	837.105	837.730	838.283
CL Beam 4	835.133	835.686	836.311	836.935	837.560	838.113

DLZ

HAMILTON COUNTY — INDIANA

HAMILTON COUNTY
HIGHWAY DEPARTMENT

STRUCTURAL STEEL DETAILS

DRAWN: CJF CHK'D. EAF
DESIGNED: EAF APPRV'D: DBH
DATE: SEPTEMBER 1, 2021
HORIZ. SCALE: AS NOTED
VERT. SCALE:
PROJECT NUMBER
PB-18-0006
1863-2011-90

NO.	REVISION	BY	DATE

DAVID B. HENKLE REGISTERED NO. 11300252 STATE OF INDIANA PROFESSIONAL ENGINEER
9/1/2021
DLZ INDIANA, LLC

SHEET 21
OF 37
DRAWING NUMBER
2011SD01

Date: September 02, 2021, 4:00pm
File: X:\Projects\GFL\2018\1863\201190 Hamilton #72\DWG\2011SD01.dwg Layout Tab: Layout (2)

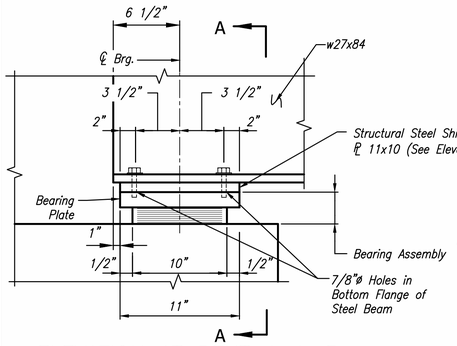

ELEVATION AT BENT 1 & 5

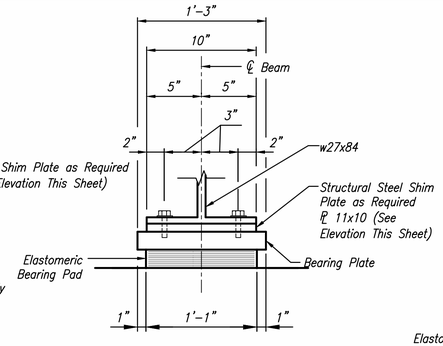

SECTION A–A

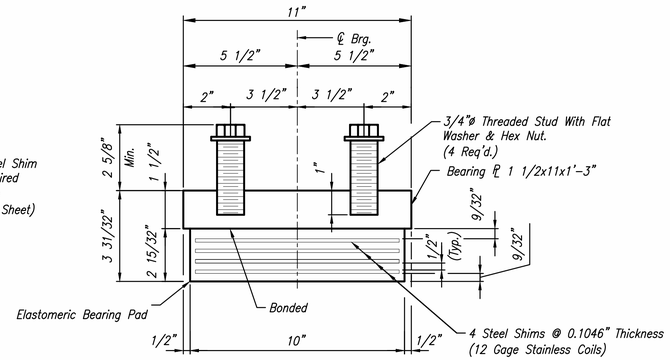

BEARING ASSEMBLY

ELASTOMERIC EXPANSION BEARING TYPE A @ BENT 1 & BENT 5

Scale: None

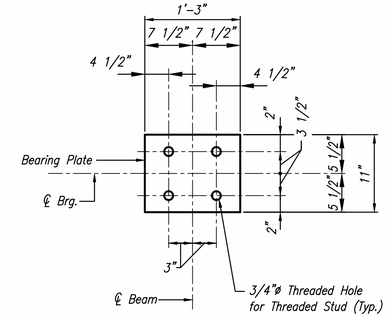

BEARING PLATE DETAIL

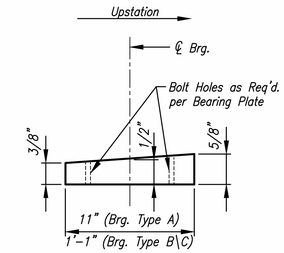

SHIM PLATE ELEVATION

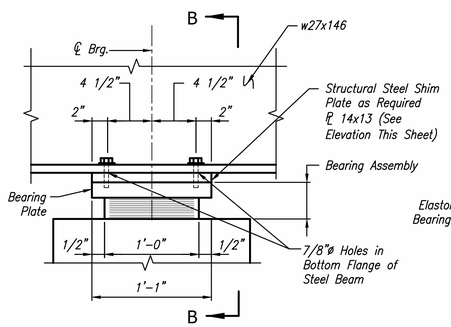

ELEVATION AT PIER 3

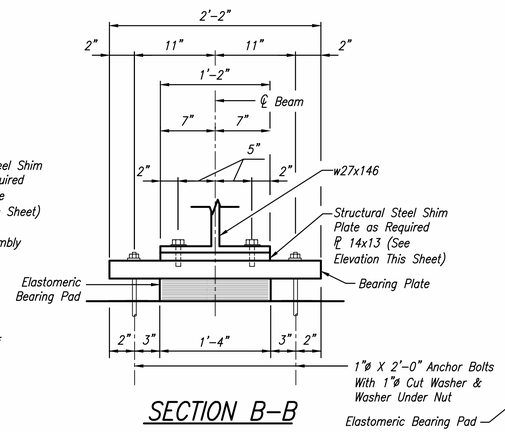

SECTION B–B

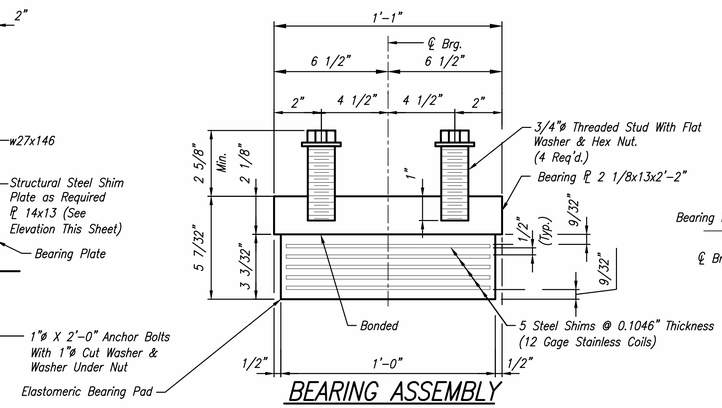

BEARING ASSEMBLY

ELASTOMERIC FIXED BEARING TYPE B @ PIER 3

Scale: None

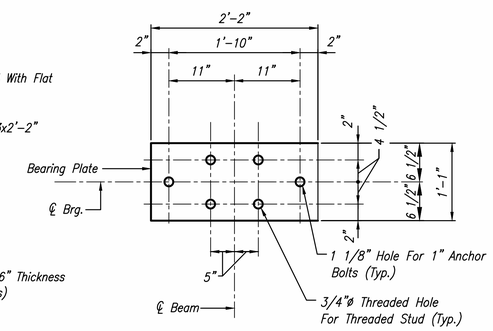

BEARING PLATE DETAIL

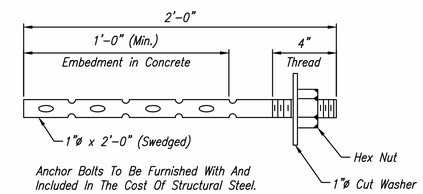

ANCHOR BOLT

(no Paint)

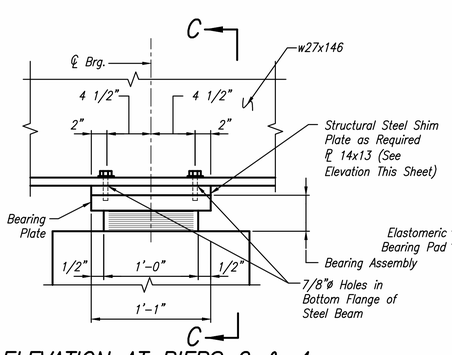

ELEVATION AT PIERS 2 & 4

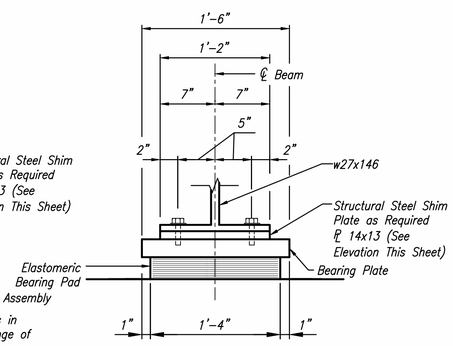

SECTION C–C

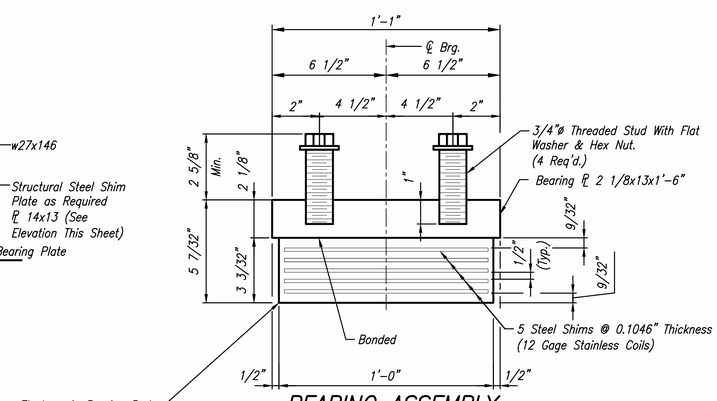

BEARING ASSEMBLY

ELASTOMERIC EXPANSION BEARING TYPE C @ PIERS 2 & 4

Scale: None

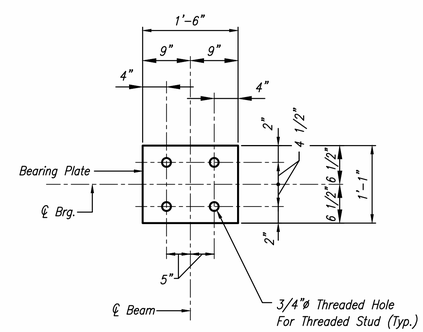

BEARING PLATE DETAIL

NOTES:

1. The Elastomeric Pad and the Top Plate with Threaded Studs, Washers and Hex Nuts Comprise the Bearing Assembly, Which Will be Paid for as "Structural Steel", LS.
2. Elastomeric Material Shall be a 55 (±5) Durometer Elastomer.
3. The Weight of the Shims are Included in the Weight of Structural Steel.
4. See Framing Plan On Sheet 16 For Shim Locations.
5. The Top Plate Shall Be A–709 Gr. 50 Steel.
6. The Shims Shall Be A–709 Gr. 36 Steel.

DLZ

HAMILTON COUNTY INDIANA

HAMILTON COUNTY
HIGHWAY DEPARTMENT

STRUCTURAL STEEL DETAILS

DRAWN: CJF	CHK'D. EAF		
DESIGNED: EAF	APPRV'D: DBH		
DATE: SEPTEMBER 1, 2021			
HORIZ. SCALE: AS NOTED			
VERT. SCALE:			
PROJECT NUMBER PB-18-0006 1863-2011-90			

NO.	REVISION	BY	DATE

DAVID B. HENKLE REGISTERED NO. 11300252 STATE OF INDIANA PROFESSIONAL ENGINEER

9/1/2021

DLZ INDIANA, LLC

SHEET 22
OF 37

DRAWING NUMBER
2011SD03

Date: September 07, 2021, 10:48am
File: X:\Projects\GFL\2018\1863\201190 Hamilton #72\DWG\2011SD03.dwg Layout Tab: Layout1

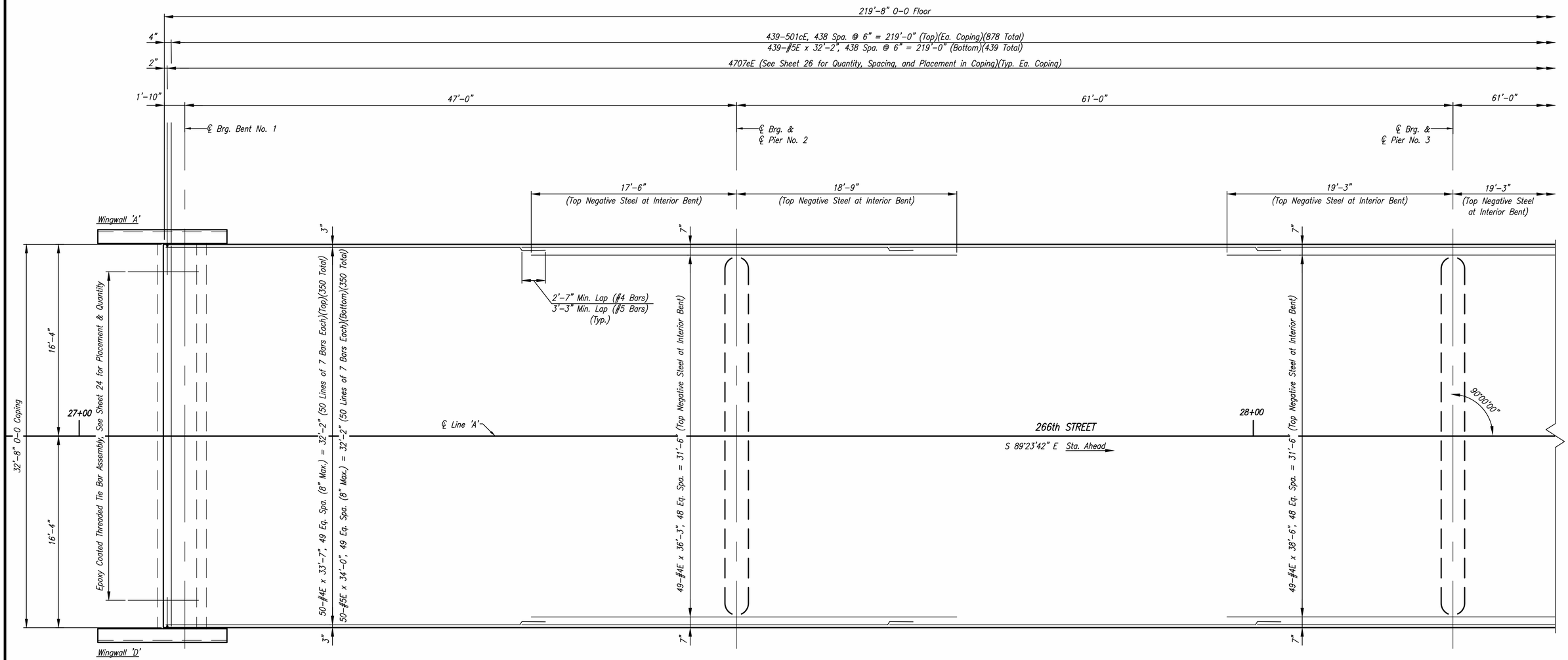

FLOOR PLAN

Scale: 1/4" = 1'-0"

NOTES:

1. For Design Data and General Notes, See Sheet 11.
2. For Typical Section and Additional Notes, See Sheet 25.

DLZ

HAMILTON COUNTY — INDIANA

HAMILTON COUNTY
HIGHWAY DEPARTMENT

SUPERSTRUCTURE DETAILS

DRAWN: CJF	CHK'D. EAF	
DESIGNED: EAF	APPRV'D: DBH	
DATE: SEPTEMBER 1, 2021		
HORIZ. SCALE: AS NOTED		
VERT. SCALE:		
PROJECT NUMBER PB-18-0006 1863-2011-90		

NO.	REVISION	BY	DATE

DAVID B. HENKLE REGISTERED NO. 11300252 STATE OF INDIANA PROFESSIONAL ENGINEER

9/1/2021

DLZ INDIANA, LLC

SHEET 23
OF 37

DRAWING NUMBER
2011SP01

Date: September 07, 2021, 10:50am
File: \\dlzcorp.com\files$\Files\Projects\GFL\2018\1863\201190 Hamilton #72\DWG\2011SP01.dwg Layout Tab: Layout

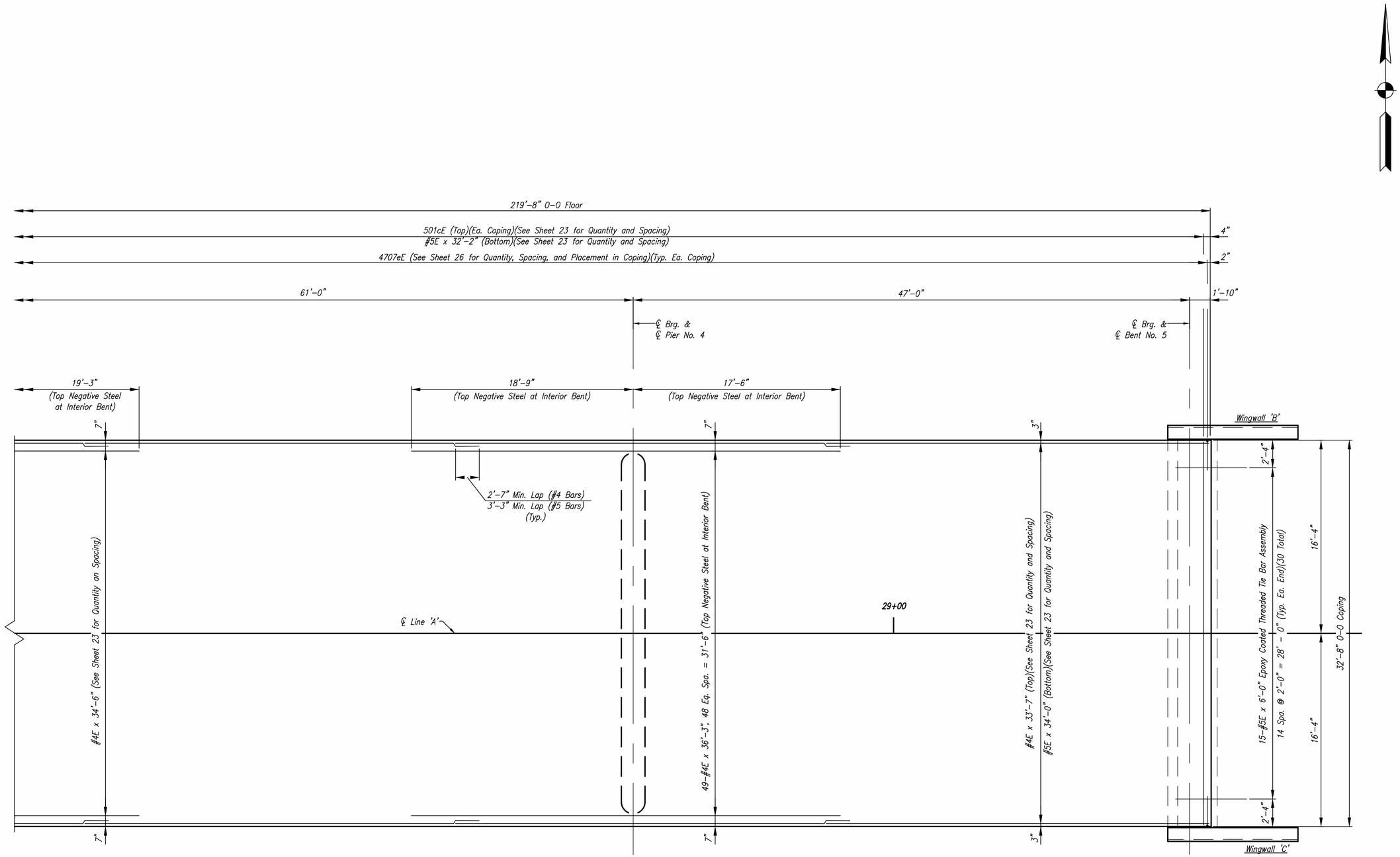

FLOOR PLAN

Scale: 1/4" = 1'-0"

NOTES:

1. For Design Data and General Notes, See Sheet 11.
2. For Typical Section and Additional Notes, See Sheet 25.

DLZ

HAMILTON COUNTY — INDIANA

HAMILTON COUNTY HIGHWAY DEPARTMENT

SUPERSTRUCTURE DETAILS

DRAWN: CJF	CHK'D. EAF		
DESIGNED: EAF	APPRV'D: DBH		
DATE: SEPTEMBER 1, 2021			
HORIZ. SCALE: AS NOTED			
VERT. SCALE:			
PROJECT NUMBER PB-18-0006 1863-2011-90			

NO.	REVISION	BY	DATE

DAVID B. HENKLE REGISTERED NO. 11300252 STATE OF INDIANA PROFESSIONAL ENGINEER

9/1/2021

DLZ INDIANA, LLC

SHEET 24 OF 37

DRAWING NUMBER 2011SP01

Date: September 07, 2021, 11:23am
File: \\dlzcorp.com\files$\Files\Projects\GFL\2018\1863\201190 Hamilton #72\DWG\2011SP01.dwg Layout Tab: Layout (2)

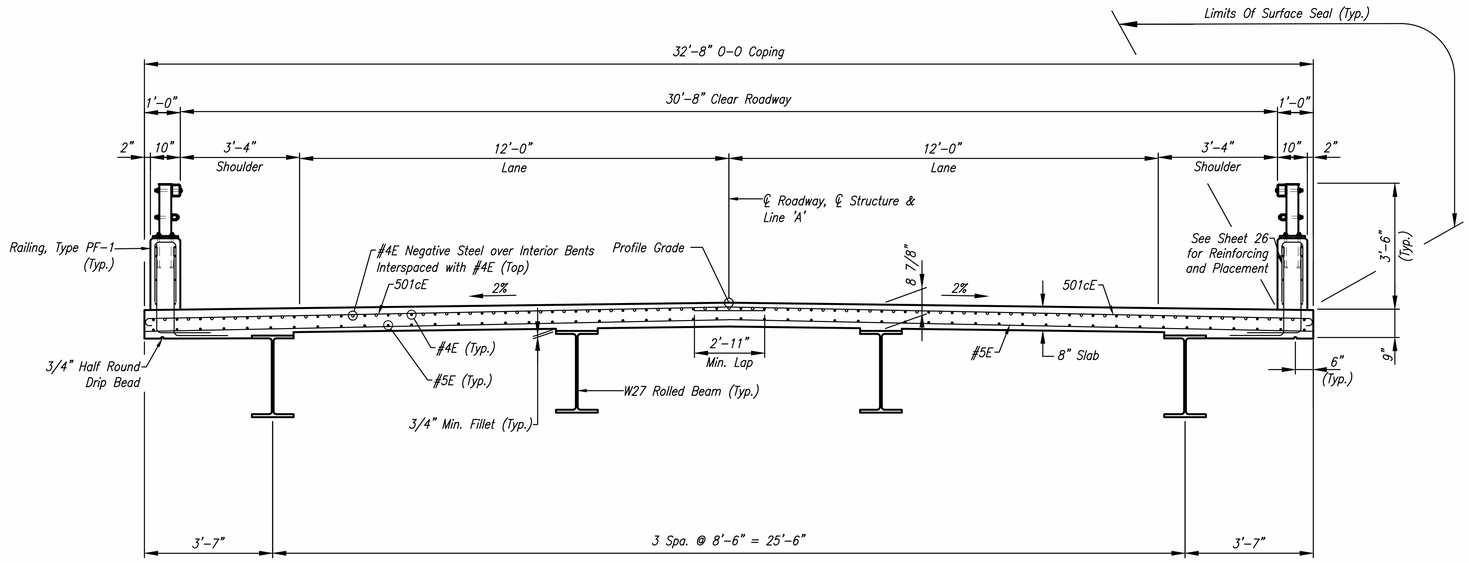

TYPICAL SECTION

Scale: 1/2" = 1'-0"

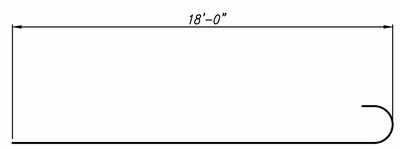

501cE x 18'-7"

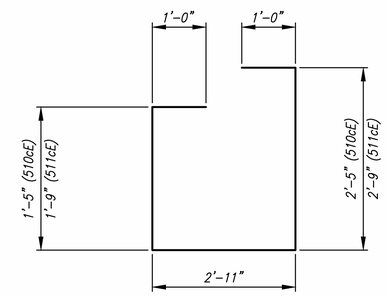

510cE x 8'-9"
511cE x 9'-5

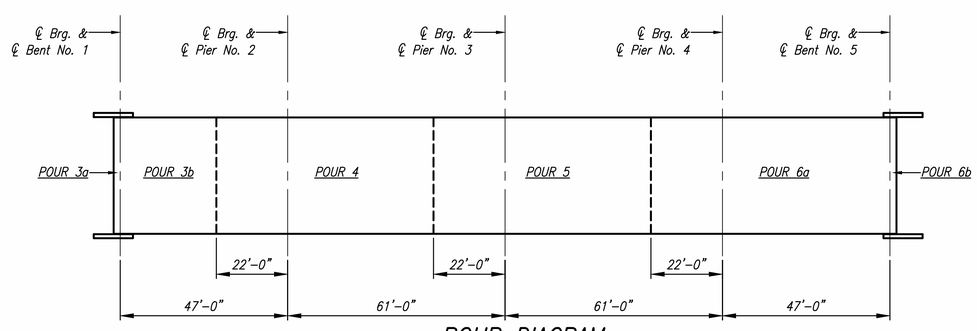

POUR DIAGRAM

Not to Scale

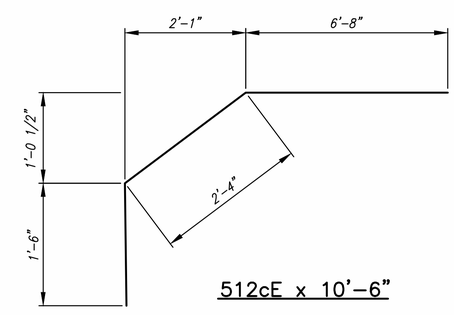

512cE x 10'-6"

BILL OF MATERIALS
FLOOR DETAILS
EPOXY COATED REINF. BARS

MARK / SIZE	NO. REQ'D	LENGTH	WEIGHT (Lbs)
#6E	24	6'- 0"	
Total #6E Bars			216
501cE	878	18'- 7"	
510cE	28	8'- 9"	
511cE	42	9'- 5"	
512cE	70	10'- 6"	
#5E	350	34'- 0"	
#5E	6	32'- 4"	
#5E	439	32'- 2"	
#5E	18	8'- 0"	
#5E	12	3'- 4"	
Total #5E Bars			45987
4707eE	1320	3'- 10"	
#4E	350	33'- 7"	
#4E	98	36'- 3"	
#4E	49	38'- 6"	
Total #4E Bars			14865
Total Reinf. Bars, Epoxy Coated			**61068**

CONCRETE, C, SUPERSTRUCTURE

Location	CYS
Pour 3a	8.0
Pour 3b	24.0
Pour 4	48.4
Pour 5	49.9
Pour 6b	59.1
Pour 6a	8.1
Total Concrete, C, Superstructure	197.5

MISCELLANEOUS

Epoxy-Coated Threaded Tie-Bar Assembly	30 EACH

NOTES:

1. For General Notes, See Sheet 11.
2. For Reinforcing Bar Notes, See Standard Drawing E 703-BRST-01.
3. All reinforcing bars shall be epoxy coated.
4. Bridge Slab Shall be Surface Sealed.
5. For Placement of 510cE, 511cE & 512cE in Superstructure, See Sheets 14 & 15.
6. For Floor Plan Reinforcement Layouts, See Sheets 23 & 24.
7. See Sheet 26 for Details and Bill of Materials of Bridge Railings.
8. The Top Reinforcing in the Deck Shall be Securely Tied Down to the Deck Forms and/or Beams to Prevent Lifting During Concrete Placement.
9. Suitable Restraint Shall be Provided to Prevent the Rotation of the Exterior Beams from Construction Load such as Finishing Machine, Forms, Etc.

DLZ

HAMILTON COUNTY — HAMILTON COUNTY HIGHWAY DEPARTMENT — INDIANA

SUPERSTRUCTURE DETAILS

DRAWN: CJF CHK'D. EAF
DESIGNED: EAF APPRV'D: DBH
DATE: SEPTEMBER 1, 2021
HORIZ. SCALE: AS NOTED
VERT. SCALE:
PROJECT NUMBER PB-18-0006 1863-2011-90

NO.	REVISION	BY	DATE

DAVID B. HENKLE REGISTERED NO. 11300252 STATE OF INDIANA PROFESSIONAL ENGINEER
9/1/2021
DLZ INDIANA, LLC

SHEET 25 OF 37
DRAWING NUMBER 2011SP02

Date: September 02, 2021, 4:06pm
File: \\dlzcorp.com\files$\Files\Projects\GFL\2018\1863\201190 Hamilton #72\DWG\2011SP02.dwg Layout Tab: Layout1

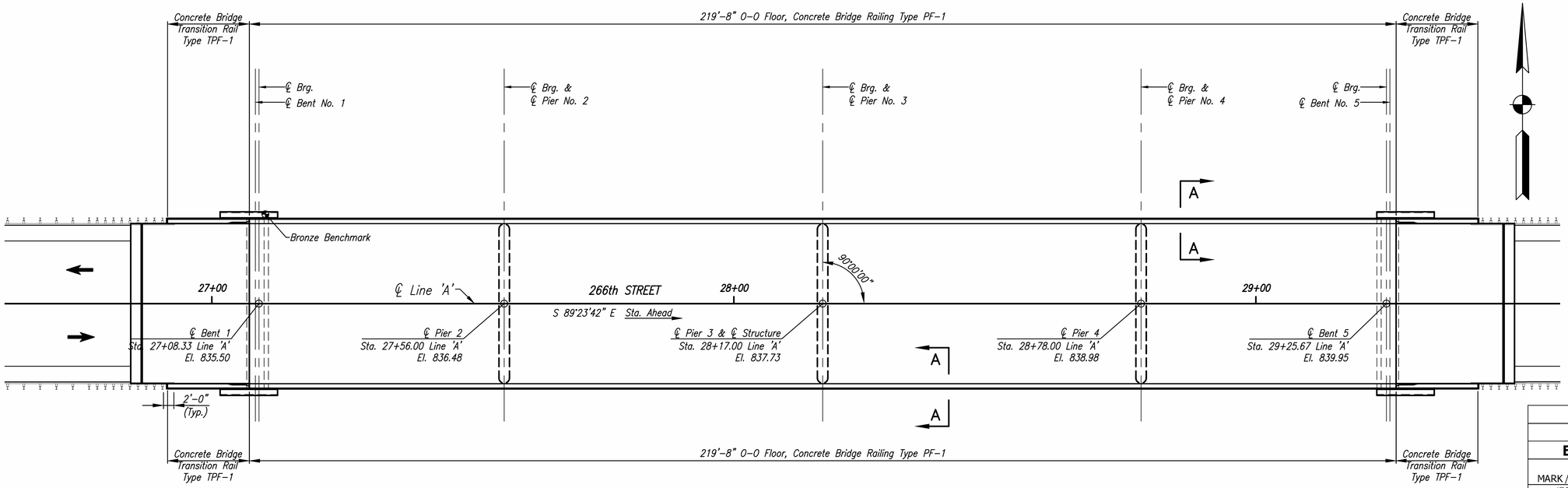

RAILING PLAN
Scale: 3/32" = 1'-0"

BILL OF MATERIALS			
BRIDGE RAILING			
EPOXY COATED REINF. BARS			
MARK / SIZE	NO. REQ'D	LENGTH	WEIGHT (Lbs)
4703eE	660	3'- 11"	
#4E	112	33'- 10"	
Total #4E Bars			4258
Total from Transition Rail TPF-1 (730 Lbs. x 4)*			2920
Total Reinf. Bars, Epoxy Coated			**7178**
MISCELLANEOUS			
Railing Concrete, PF-1 (13.5 CYS x 2 sides)			27.0 CYS
Railing Steel, PF-1 (228.25 LFT x 2 sides)			456.5 LFT
Surface Seal (Est., incl. 119 SFT x 4 for Trans.)			2600 SFT
Concrete Bridge Railing Transition, TPF-1			4 EACH

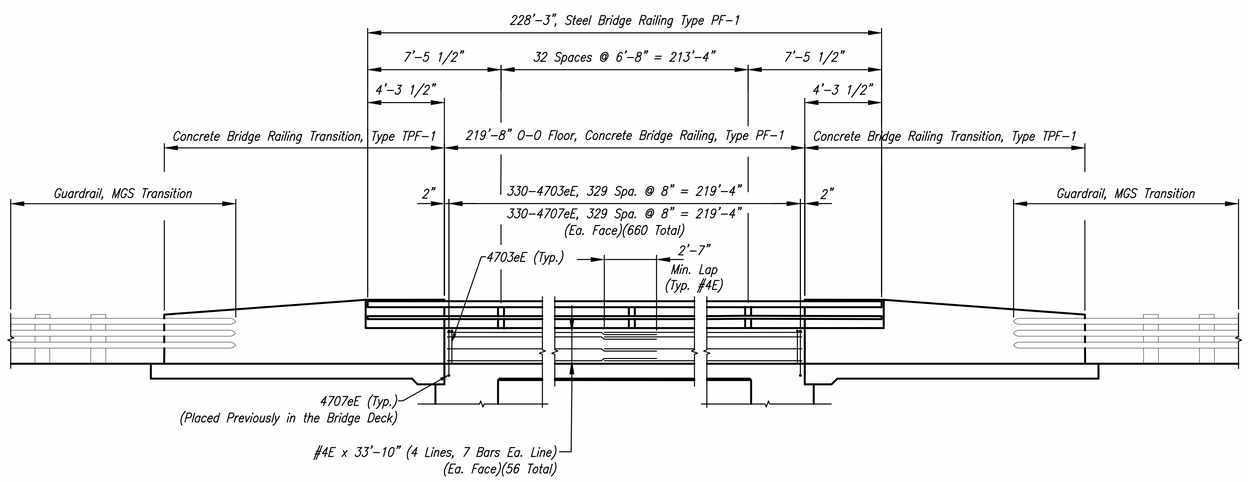

ELEVATION – RAILING, CONCRETE PF-1
Scale: 1/4" = 1'-0"

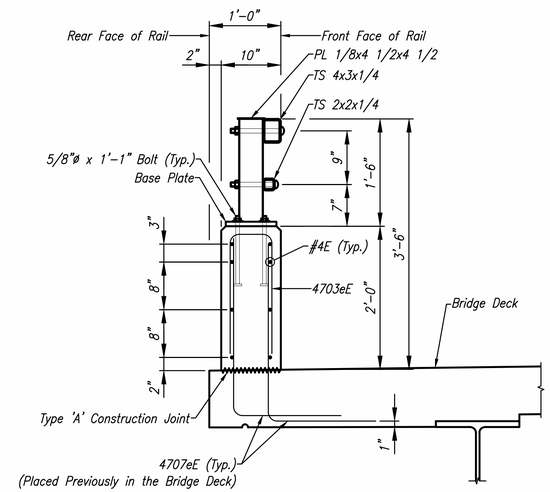

SECTION A–A
Scale: 1" = 1'-0"

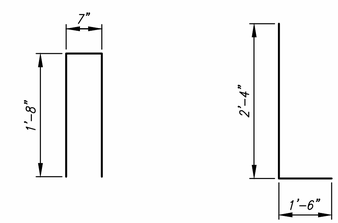

4703eE x 3'–11" 4707eE x 3'–10"

NOTES:
1. For Design Data, Typical Section and General Notes, See Sheet 11.
2. For Reinforcing Bar Notes, See Standard Drawing E 703–BRST–01.
3. For Details Of Concrete Bridge Railing Transition, Type TPF–1, See Standard Drawings E 706–TTPP–01 Through –03.
4. For Additional Details Of Concrete Bridge Railing, Type PF–1, See Standard Drawing E 706–BRPP–02.
5. For Details Of Construction Joint Type A, See Standard Drawing E 702–CJTA–01.
6. All Reinforcing Bars In Railings Shall Be Epoxy Coated.
7. Railings Shall Be Surfaced Sealed.

DLZ

HAMILTON COUNTY — HAMILTON COUNTY HIGHWAY DEPARTMENT — INDIANA

RAILING DETAILS

DRAWN: CJF	CHK'D. EAF		
DESIGNED: EAF	APPRV'D: DBH		
DATE: SEPTEMBER 1, 2021			
HORIZ. SCALE: AS NOTED			
VERT. SCALE:			
PROJECT NUMBER PB-18-0006 1863-2011-90			

NO.	REVISION	BY	DATE

DAVID B. HENKLE REGISTERED NO. 11300252 STATE OF INDIANA PROFESSIONAL ENGINEER
9/1/2021
DLZ INDIANA, LLC

SHEET 26 OF 37

DRAWING NUMBER 2011BR01

Date: September 02, 2021, 4:08pm
File: X:\Projects\GFL\2018\1863\201190 Hamilton #72\DWG\2011BR01.dwg Layout Tab: Layout

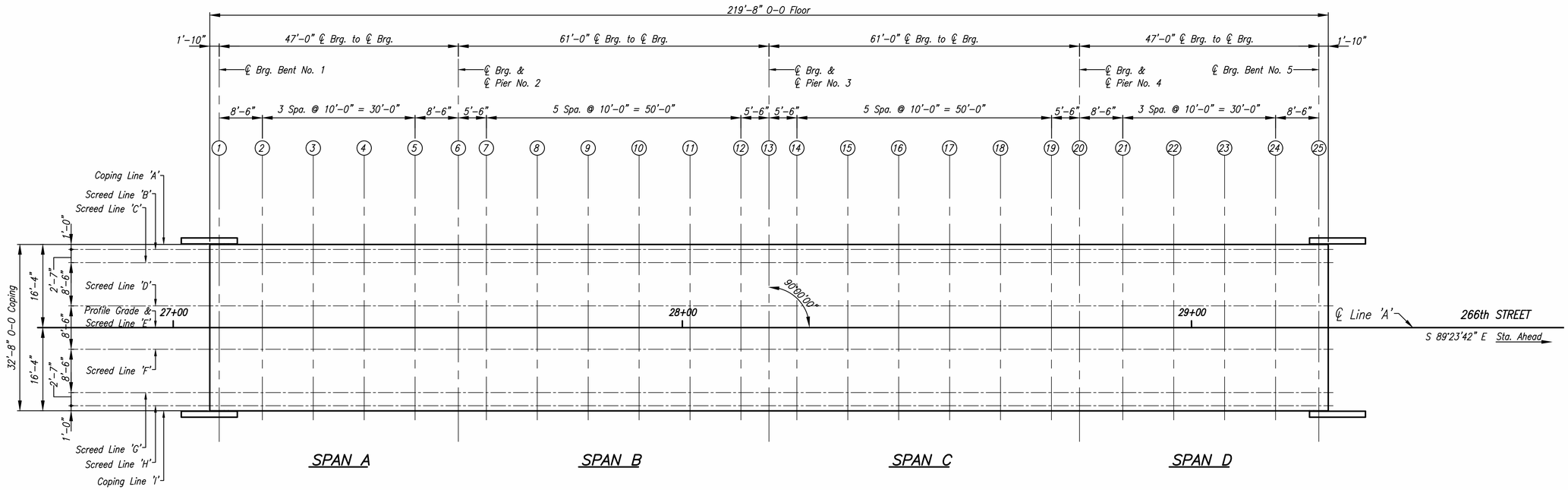

PLAN OF SCREEDS

Scale: 3/32" = 1'-0"

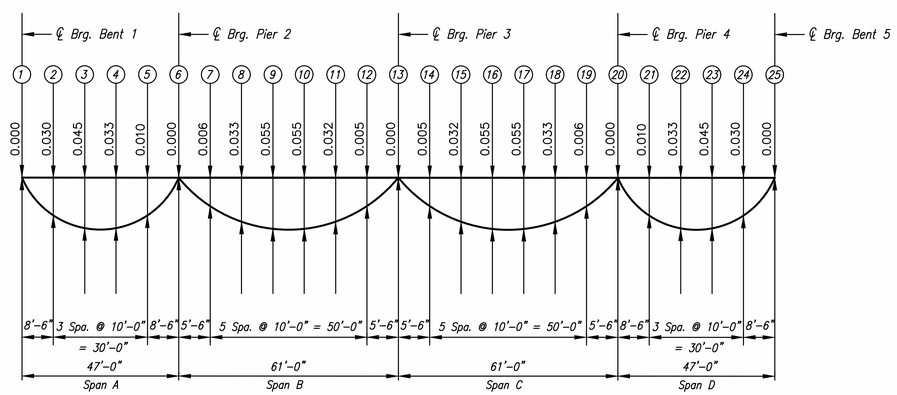

CONCRETE DEAD LOAD DEFELECTION DIAGRAM FOR INTERIOR BEAMS (FEET)

Scale: None

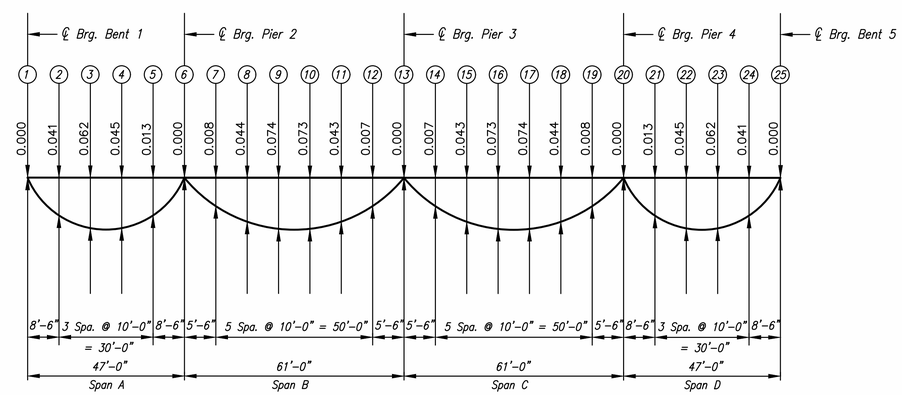

CONCRETE DEAD LOAD DEFELECTION DIAGRAM FOR FASCIA BEAMS (FEET)

Scale: None

PURPOSE

"Plan Of Screeds" Shows Locations Of Screeds. "Table Of Screed Elevations" (on Sheet 28) Shows Data For Setting Screed And Coping Forms So That The Slab And Coping Will Be At The Final Grade Elevations After All Of The Concrete Has Been Poured.

SCREED NOTES

1. Take Elevations At All The Screed Points On Top Of Beams Adjacent To Screed Points. Subtract These Elevations From Tabulated Elevations And Use The Resulting Dimensions As The Height For Setting The Screed Or Coping Form Above That Point. This Dimension Remains Constant Regardless Of How Much Or In What Order The Concrete Is Poured. Do Not Set Screed Or Coping Forms By Leveling.

2. No Concrete In The Floor Slab Is To Be Poured Until The Above Operations Are Completed.

DLZ

HAMILTON COUNTY — HAMILTON COUNTY HIGHWAY DEPARTMENT — INDIANA

SCREEDS

DRAWN: CJF	CHK'D. EAF
DESIGNED: EAF	APPRV'D: DBH
DATE: SEPTEMBER 1, 2021	
HORIZ. SCALE: AS NOTED	
VERT. SCALE:	
PROJECT NUMBER PB-18-0006 1863-2011-90	

NO.	REVISION	BY	DATE

DAVID B. HENKLE REGISTERED NO. 11300252 STATE OF INDIANA PROFESSIONAL ENGINEER

9/1/2021

DLZ INDIANA, LLC

SHEET 27 OF 37

DRAWING NUMBER 2011SC01

Date: September 02, 2021, 4:09pm
File: X:\Projects\GFL\2018\1863\201190 Hamilton #72\DWG\2011SC01.dwg Layout Tab: Layout

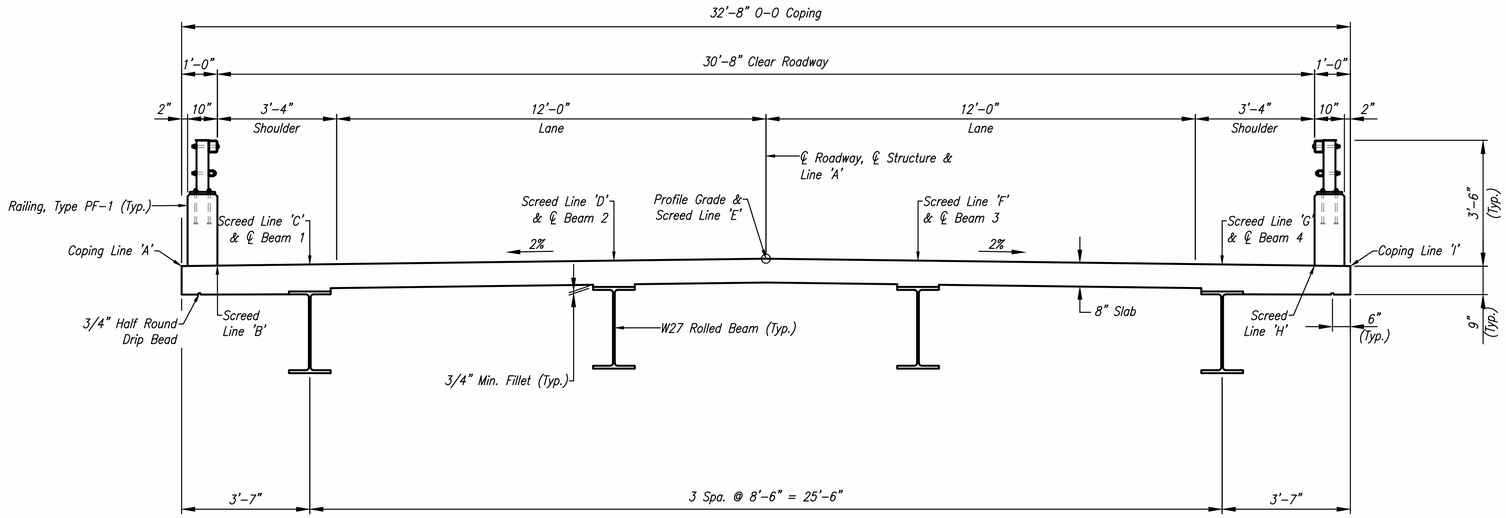

SECTION ⊥ TO STRUCTURE

Scale: 1/2" = 1'-0"

TABLE OF SCREED ELEVATIONS

			1	2	3	4	5	6	7	8	9	10	11	12	13	14	15	16	17	18	19	20	21	22	23	24	25
SCREED LINE	A	Elevation – Top Of Coping Form	835.200	835.415	835.640	835.830	836.000	836.165	836.285	836.525	836.760	836.965	837.140	837.305	837.415	837.530	837.775	838.010	838.215	838.390	838.555	838.660	838.850	839.085	839.305	839.490	839.620
		Elevation – Top Of Adjacent Beam																									
		Distance – Top Of Beam To Top Of Coping Form																									
	B	Elevation – Top Of Screed	835.220	835.435	835.660	835.850	836.020	836.185	836.305	836.545	836.780	836.985	837.160	837.325	837.435	837.550	837.795	838.030	838.235	838.410	838.575	838.680	838.870	839.105	839.325	839.510	839.640
		Elevation – Top Of Adjacent Beam																									
		Distance – Top Of Beam To Top Of Screed																									
	C	Elevation – Top Of Screed	835.270	835.485	835.710	835.900	836.075	836.235	836.355	836.595	836.830	837.035	837.210	837.380	837.485	837.605	837.845	838.080	838.285	838.460	838.630	838.735	838.920	839.155	839.380	839.560	839.695
		Elevation – Top Of Adjacent Beam																									
		Distance – Top Of Beam To Top Of Screed																									
	D	Elevation – Top Of Screed	835.440	835.645	835.865	836.060	836.240	836.405	836.525	836.755	836.980	837.185	837.370	837.545	837.655	837.770	838.005	838.230	838.435	838.620	838.795	838.905	839.085	839.315	839.530	839.720	839.865
		Elevation – Top Of Adjacent Beam																									
		Distance – Top Of Beam To Top Of Screed																									
	E*	Elevation – Top Of Screed	835.525	835.730	835.950	836.145	836.325	836.490	836.610	836.840	837.065	837.270	837.455	837.630	837.740	837.855	838.090	838.315	838.520	838.705	838.880	838.990	839.170	839.400	839.615	839.805	839.950
		Elevation – Top Of Adjacent Beam																									
		Distance – Top Of Beam To Top Of Screed																									
	F	Elevation – Top Of Screed	835.440	835.645	835.865	836.060	836.240	836.405	836.525	836.755	836.980	837.185	837.370	837.545	837.655	837.770	838.005	838.230	838.435	838.620	838.795	838.905	839.085	839.315	839.530	839.720	839.865
		Elevation – Top Of Adjacent Beam																									
		Distance – Top Of Beam To Top Of Screed																									
	G	Elevation – Top Of Screed	835.270	835.485	835.710	835.900	836.075	836.235	836.355	836.595	836.830	837.035	837.210	837.380	837.485	837.605	837.845	838.080	838.285	838.460	838.630	838.735	838.920	839.155	839.380	839.560	839.695
		Elevation – Top Of Adjacent Beam																									
		Distance – Top Of Beam To Top Of Screed																									
	H	Elevation – Top Of Screed	835.220	835.435	835.660	835.850	836.020	836.185	836.305	836.545	836.780	836.985	837.160	837.325	837.435	837.550	837.795	838.030	838.235	838.410	838.575	838.680	838.870	839.105	839.325	839.510	839.640
		Elevation – Top Of Adjacent Beam																									
		Distance – Top Of Beam To Top Of Screed																									
	I	Elevation – Top Of Coping Form	835.200	835.415	835.640	835.830	836.000	836.165	836.165	836.285	836.525	836.760	836.965	837.140	837.305	837.530	837.775	838.010	838.215	838.390	838.555	838.660	838.850	839.085	839.305	839.490	839.620
		Elevation – Top Of Adjacent Beam																									
		Distance – Top Of Beam To Top Of Coping Form																									

* Screed Line E Is ℄ Roadway And The Profile Grade Line

DLZ

HAMILTON COUNTY — HAMILTON COUNTY HIGHWAY DEPARTMENT — INDIANA

SCREEDS

DRAWN: CJF CHK'D. EAF
DESIGNED: EAF APPRV'D: DBH
DATE: SEPTEMBER 1, 2021
HORIZ. SCALE: AS NOTED
VERT. SCALE:
PROJECT NUMBER PB-18-0006 1863-2011-90

NO.	REVISION	BY	DATE

DAVID B. HENKLE REGISTERED NO. 11300252 STATE OF INDIANA PROFESSIONAL ENGINEER
9/1/2021
DLZ INDIANA, LLC

SHEET 28 OF 37
DRAWING NUMBER 2011SC02

Date: September 02, 2021, 4:10pm
File: X:\Projects\GFL\2018\1863\201190 Hamilton #72\DWG\2011SC02.dwg Layout Tab: Layout1

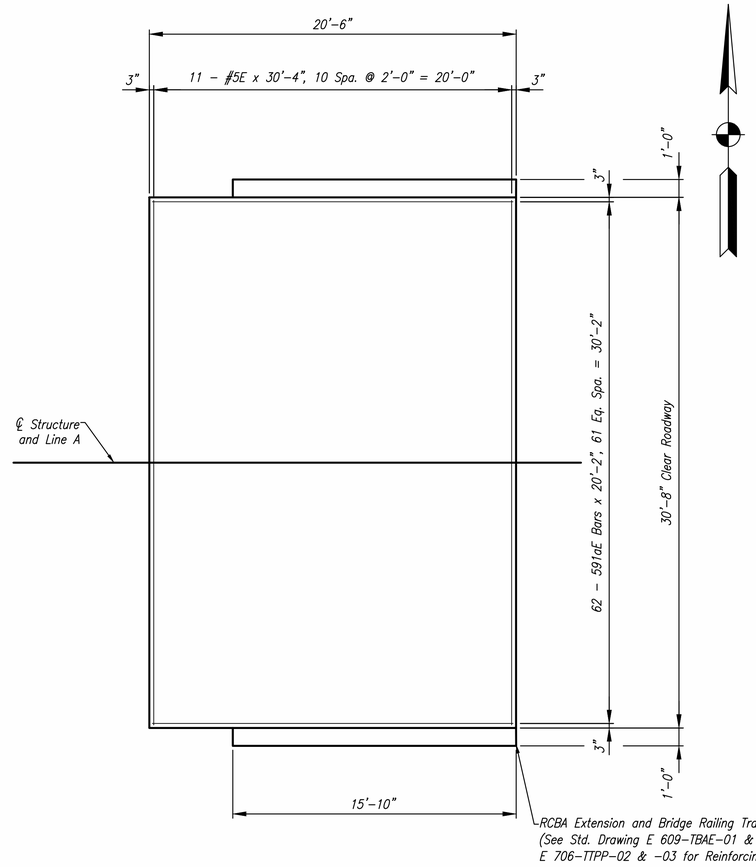

PLAN WEST APPROACH SLAB BOTTOM REINFORCING STEEL

Scale: 1/4" = 1'-0"

(West Approach Slab Shown; East Approach Opposite Hand)

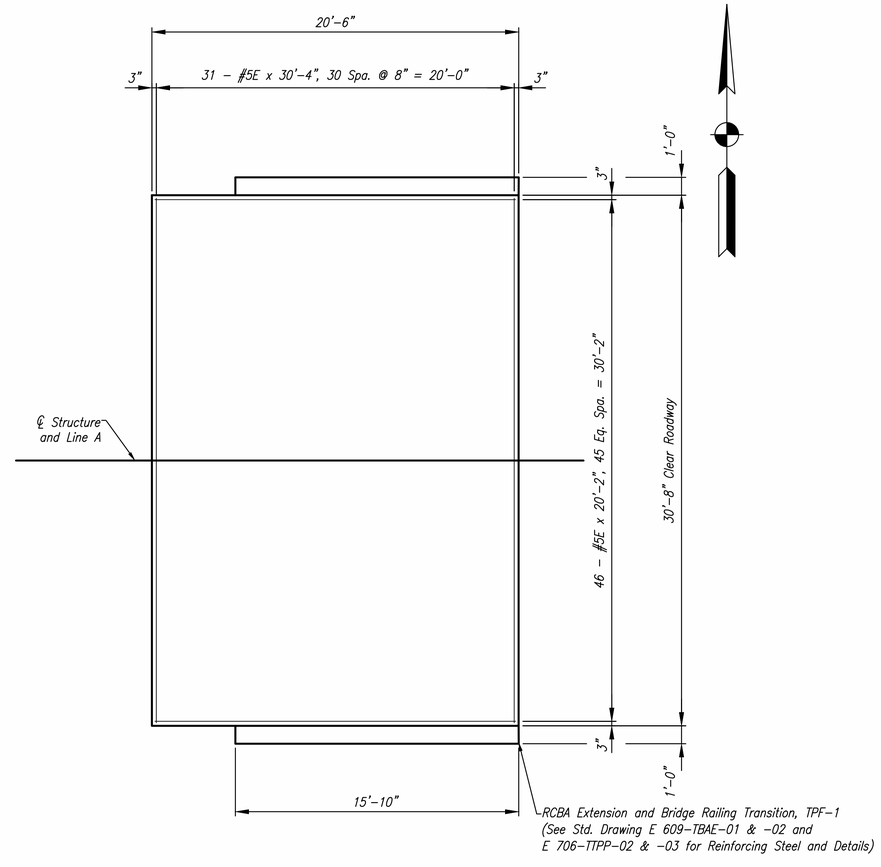

PLAN WEST APPROACH SLAB TOP REINFORCING STEEL

Scale: 1/4" = 1'-0"

(West Approach Slab Shown; East Approach Opposite Hand)

BILL OF MATERIALS			
APPROACH SLABS			
EPOXY COATED REINF. BARS			
MARK / SIZE	NO. REQ'D	LENGTH	WEIGHT (Lbs)
591aE	124	20'- 9"	
#5E	84	30'- 4"	
#5E	92	20'- 2"	
Total #5 Bars			7276
Total from RCBA Extension (230 Lbs. x 4)*			920
Total Reinf. Bars, Epoxy Coated			**8196**
CONCRETE			
RCBA, 12 in.			140 SYS
RCBA Extension (1.8 SYS x 4)			8 SYS
Total RCBA			**148 SYS**
MISCELLANEOUS			
Subbase For PCCP			36 CYS
Subgrade Treatment, Type IC			146 SYS
Geotextile For Subgrade, Type 2B			146 SYS
Terminal Joint, Type HMA			62 LFT

* See Standard Drawing No. E 609-TBAE-01 For Reinforcing Bars Required For RCBA Extension.

** See Standard Drawing No. E 503-BATJ-03 For Materials Required for Terminal Joint, Type HMA.

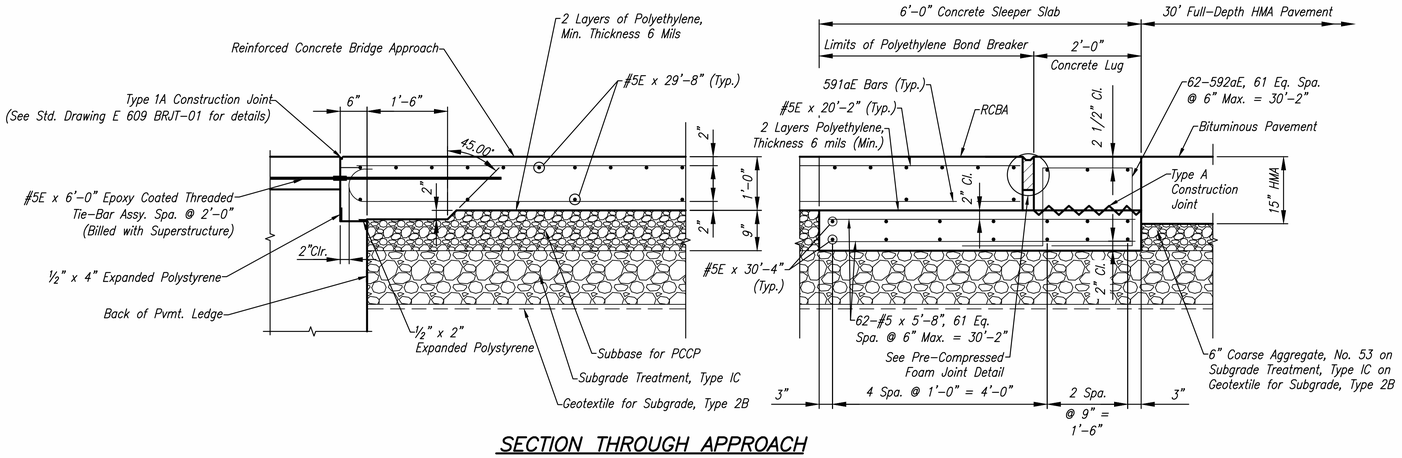

SECTION THROUGH APPROACH

Scale: 3/4" = 1'-0"

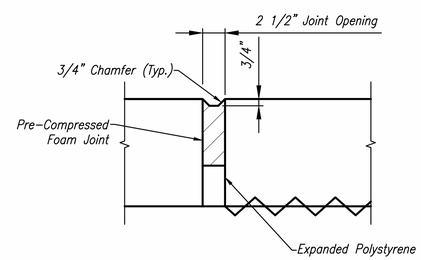

PRE-COMPRESSED FOAM JOINT DETAIL

Scale: None

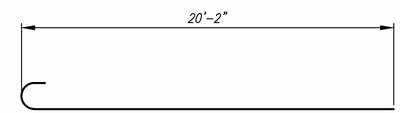

591aE x 20'-9"

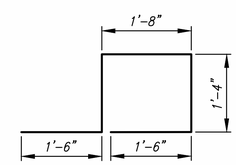

592aE x 7'-4"

NOTES:

1. For General Notes, See Sheet 11.
2. All Reinforcing Bars in Approach Slab Shall be Epoxy Coated.
3. RCBA Extension and Approach Slabs Shall be Surfaced Sealed.
4. For Reinforcing Bar Bending and Notes, See Standard Drawing E 703-BRST-01.
5. Tining or grooving of the concrete shall be terminated 6" in advance of the joint opening.

DLZ

HAMILTON COUNTY — INDIANA

HAMILTON COUNTY HIGHWAY DEPARTMENT

APPROACH SLAB

DRAWN: QCP	CHK'D. EAF		
DESIGNED: EAF	APPRV'D: DBH		
DATE: SEPTEMBER 1, 2021			
HORIZ. SCALE: AS NOTED			
VERT. SCALE:			
PROJECT NUMBER PB-18-0006 1863-2011-90			

NO.	REVISION	BY	DATE

DAVID B. HENKLE REGISTERED NO. 11300252 STATE OF INDIANA PROFESSIONAL ENGINEER

9/1/2021

DLZ INDIANA, LLC

SHEET 29 OF 37

DRAWING NUMBER 2011AS01

Date: September 07, 2021, 4:22pm
File: X:\Projects\GFL\2018\1863\201190 Hamilton #72\DWG\2011AS01.dwg Layout Tab: Layout

SUMMARY OF BRIDGE QUANTITIES

ITEM	CONCRETE CLASS C SUPERSTR	CONCRETE CLASS C SUBSTR	CONCRETE CLASS A SUBSTR	CONCRETE CLASS B IN FTG.	RAILING, CONCRETE, PF-1	REINF. BARS	REINF. BARS, EPOXY COATED	RAILING STEEL, PF-1	CONC. BRIDGE RAILING TRANS. TPF-1	THREADED TIE BAR ASSEMBLY, EPOXY COATED	REINF. CONC. BRIDGE APPROACH (12 IN.)	SUBBASE FOR PCCP	SUBGRADE TREATMENT TYPE IC	GEOTEXTILE FOR SUBGRADE TYPE 2B	GEOTEXTILE FOR RIPRAP TYPE 1A	REVETMENT RIPRAP	SODDING	AGGREGATE FOR END BENT BACKFILL	GEOTEXTILES FOR UNDERDRAIN TYPE 2B	PIPE, END BENT DRAIN 6 IN.	PILES STEEL PIPE (14 IN. X 0.312 IN)	PILES CONICAL PILE TIP (14 IN.)	PILES CORED HOLE IN ROCK		FIELD DRILLED HOLES IN CONCRETE	STRUCT. STEEL**	SURFACE SEAL**
	CYS	CYS	CYS	CYS	CYS	LBS	LBS	LFT	EACH	EACH	SYS	CYS	SYS	SYS	SYS	TON	SYS	CYS	SYS	LFT	LFT	EACH	NO.	LFT	EACH	LBS	SFT
BENT 1		22.4					2893								185.0	128.0		15.0	39	70	66	2					
PIER 2			8.9				1272																		74		
PIER 3			8.9				1272								16.5	12.5									74		
PIER 4			8.9				1272								16.5	12.5									74		
BENT 5		23.2					2904								194.0	135.0		15.0	39	70	74	2					
SUPERSTRUCTURE & RAILINGS	197.5				27		68,246	456.5		30																109,530	2,600
EAST APPROACH SLAB							4098		2		74.0	18	73.0	73.0	78.0	57.5	37										
WEST APPROACH SLAB							4098		2		74.0	18	73.0	73.0	68.0	50.5	35										
TOTALS	197.5	45.6	26.7		27		86,055	456.5	4	30	148.0	36	146.0	146.0	558.0	396.0	72.0	30.0	78	140	140	4			222	109,530	2,600

** Estimated Quantity

DLZ

HAMILTON COUNTY

HAMILTON COUNTY
HIGHWAY DEPARTMENT

INDIANA

MISCELLANEOUS TABLES

DRAWN: CJF CHK'D. EAF
DESIGNED: EAF APPRV'D: DBH
DATE: SEPTEMBER 1, 2021
HORIZ. SCALE: N/A
VERT. SCALE:
PROJECT NUMBER
PB-18-0006
1863-2011-90

NO.	REVISION	BY	DATE

DAVID B. HENKLE
REGISTERED
NO. 11300252
STATE OF INDIANA
PROFESSIONAL ENGINEER

9/1/2021
DLZ INDIANA, LLC

SHEET 30
OF 37
DRAWING NUMBER
2011BS01

Date: September 07, 2021, 10:53am
File: X:\Projects\GFL\2018\1863\201190 Hamilton #72\DWG\2011BS01.dwg Layout Tab: 0985BS01 - Summary

SUMMARY OF PAVEMENT QUANTITIES AND APPROACH TABLE

LOCATION (STATION)	DESCRIPTION (APPROACH TYPE OR CLASS)	WIDTH	LENGTH	DISTANCE BEYOND R/W LINE	RADII 'R'	GRADE (LESS THAN 8.33% NOT SHOWN)		EXCAVATION		HMA FOR WIDENING TYPE C (LB/SYS)			HMA FOR ROADWAY TYPE C (LB/SYS)			6" COMPACTED AGGREGATE NO. 53 FOR BASE	MILLING TRANSITION	GEOTEXTILE FOR SUBGRADE, TYPE 2B	BITUMINOUS MATERIAL FOR:			COMPACTED AGGREGATE NO. 53		JOINT ADHESIVE SURFACE	JOINT ADHESIVE INTERMEDIATE	LIQUID ADHESIVE SEALANT	SUBGRADE TREATMENT IC	MULCHED SEEDING R	REMARKS
										SURFACE	INTER	BASE	SURFACE	INTER	BASE				SEAL COAT	PRIME COAT	TACK COAT	DEPTH 10.5"	DEPTH 21"						
		'W'	'L'		'R'	1	2	CYS		165	330	660	165	330	1155														
		FEET	FEET	FEET	FEET	%	%	CUT	FILL	TON	TON	TON	TON	TON	TON	CYS	SYS	SYS	TON	TON	SYS	TON	TON	LFT	LFT	LFT	SYS	SYS	
LINE 'A'																													
MAINLINE										24	51	111	95	53	137	34	838	201			1,827	254	98	1,058	704	1,058	596	2,433	
30+95.00	MODIFIED CLASS V FIELD ENTRANCE	12	24.9		25'/25'																	37							
TOTAL											186		95	53	137	34	838	201			1,827	389		1,058	704	1,058	596	2,433	

GUARDRAIL SUMMARY TABLE

LOCATION: FROM STATION	LOCATION: TO STATION	LEFT	RIGHT	MGS W-BEAM GUARDRAIL LENGTH: STANDARD POST AT 6.25 FEET SPA.	MGS W-BEAM GUARDRAIL LENGTH: TIMBER GUARDRAIL	MODIFIED POSTS, NESTED GUARDRAIL	TYPE OS END TERMINAL 31"	MGS GUARDRAIL TRANSITION	GUARDRAIL, END TREATMENT, REMOVE	GUARDRAIL, REMOVE	CURVED W-BEAM GUARDRAIL SYSTEM: TERMINAL END TYPE	TERMINAL END EACH	CONNECTOR SYSTEM TYPE	CONNECTOR SYSTEM EACH
				FEET	FEET	FEET	EACH	EACH	EACH	LFT	TYPE	EACH	TYPE	EACH
LINE 'A'														
24+76.48	26+92.10		X	175.00			1	1	1	277				
25+76.48	26+92.10	X		75.00			1	1	1	182				
29+41.90	29+82.52		X				1	1	1	77				
29+41.90	30+26.27	X		43.75			1	1		147				
TOTALS				293.75			4	4	3	683				

STRUCTURE DATA

STRUCTURE NUMBER	LOCATION: STATION	LEFT	RIGHT	CROSS	OFFSET	SIZE	DESCRIPTION: PIPE TYPE	DESCRIPTION: MANHOLE, INLET, CATCH BASIN, OR SPECIALTY	LENGTH	SKEW	FLOW LINE: COVER	FLOW LINE: UP STREAM	FLOW LINE: DOWN STREAM	SERVICE LIFE	SITE DESIGNATION	PH	BACKFILL METHOD	STRUCTURE BACKFILL, TYPE 1	VELOCITY	REVETMENT RIPRAP	CONCRETE, CLASS "A"	PIPE END SECTION	GRATED BOX END SECTION: TYPE	GRATED BOX END SECTION: SLOPE	CONNECT TO STR.	REMARKS
									LFT		FT	ELEV.	ELEV.	YEAR				CYS	FT/sec	TON	CYS	EA.	TYPE	SLOPE		
	LINE 'A'																									
1	31+00.85		x		20.09'	15"	3	PIPE	65		1.3	841.95	840.04	75	A		2	20				2				
2	30+82.74	x			22.94'	8"	3	PIPE	20		1	841.53	840.09	75	A		2	5				1				CONNECT TO EXISTING PIPE
3	29+32.58	x			42.42'	8"	3	PIPE	80		6	827.51	819.44	75	A		2	65				1				CONNECT TO EXISTING PIPE
4	29+42.43	x			38.14'	10"	3	PIPE	95		6	827.86	819.44	75	A		2	80				1				CONNECT TO EXISTING PIPE
TOTALS																		170								

PAVED SIDE DITCH, RIPRAP DITCH, AND SODDING SUMMARY TABLE

LOCATION: FROM STATION	LOCATION: TO STATION	LEFT	MEDIAN	RIGHT	PAVED SIDE DITCH: ACTUAL LENGTH	CUT OFF WALLS (8' EQUIVAL. LENGTH EACH)	LUGS (8' EQUIVAL. LENGTH EACH)	TOTAL EQUIVALENT PAY LENGTHS TYPE					RIPRAP DITCH: REVETMENT RIPRAP	RIPRAP, CLASS 1	RIPRAP, UNIFORM	GEOTEXTILES FOR RIPRAP, TYPE 1A	GEOTEXTILES FOR RIPRAP, TYPE 3	SODDING: FOR PAVED SIDE DITCHES	FOR DITCHES	FOR MEDIAN	FOR SHOULDER BREAK	TOTAL SODDING	WATER	NURSERY SODDING FOR LAWNS
					LFT	EACH	EACH	LFT	LFT	LFT	LFT	LFT	TONS	TONS	TONS	SYS	SYS	SYS	SYS	SYS	SYS	SYS	GAL	SYS	
LINE "A"																									
28+85.00	29+32.00			X										44		64									
29+04.00	30+74.07	X																	177			177	1		
29+32.00	30+68.07			X															141			141	1		
TOTALS														44		64			318			318	2		

PAVEMENT MARKINGS SUMMARY OF QUANTITIES

LOCATION	LINE PAINT: SOLID WHITE 4 IN	LINE PAINT: BROKEN YELLOW 4 IN	LINE PAINT: SOLID YELLOW 4 IN	PAVEMENT MESSAGE THERMOPLASTIC LANE INDICATION ARROW	PAVEMENT MESSAGE THERMOPLASTIC WORD "ONLY"	SNOWPLOWABLE RAISED PAVEMENT MARKERS
	FT	FT	FT	EACH	EACH	EACH
LINE 'A'						
23+65.00 - 31+10	1,490	187				
TOTAL	1,490	187				

PIPE MATERIAL TABLE

			STRUCTURE NUMBER	1	2	3	4
			PIPE TYPE / SHAPE (CIR or DEF)	3 / CLR.	3 / CLR.	3 / CLR.	3 / CLR.
INT. DES.			SMOOTH PIPE SIZE	15"	8"	8"	10"
			CORRUGATED PIPE SIZE				
			SEMI-SMOOTH PIPE SIZE				
CONC.	RCP/RCHEP (S)	CLASS		II			
		$D_{0.01}$ RATING		1000			
	NON-REINFORCED CONCRETE PIPE, CLASS 3 (S)						
PLASTIC PIPE	CORRUGATED PE PIPE, TYPE S (S)*						
	PROFILE WALL (RIBBED) PE PIPE (S)*						
	PROFILE WALL (CLOSED) PE PIPE (S)*						
	SMOOTH WALL PE PIPE (S)* / MAXIMUM DR						
	CORRUGATED PP PIPE (S)				X	X	X
	PROFILE WALL PVC PIPE (S)						
	SMOOTH WALL PVC PIPE (S)*						
CLAY	VITRIFIED CLAY PIPE, EXTRA STRENGTH (S)						
CORRUGATED STEEL PIPE / PIPE-ARCH	FULLY BIT. PAVED & LINED (S)	CORR.PROFILE					
		THICKNESS					
	ZINC COATED (C)	CORR. PROFILE					
		THICKNESS					
	ZINC COATED W/ BPI (C)	CORR. PROFILE					
		THICKNESS					
	ALUM. COATED TYPE 2 (C)	CORR. PROFILE					
		THICKNESS					
	POLYMER PRECOATED GALVANIZED (C)	CORR. PROFILE					
		THICKNESS					
	POLYMER PRECOATED GALVANIZED CORRUGATED STEEL PIPE TYPE 1A (S)	CORR. PROFILE					
		THICKNESS					
COR. ALUM. PIPE/ P-ARCH	CORRUGATED ALUM. ALLOY (C)	CORR. PROFILE					
		THICKNESS					
	CORRUGATED ALUM. ALLOY W/ BPI (C)	CORR. PROFILE					
		THICKNESS					
SPIRAL RIB STEEL PIPE	ZINC COATED (SS)	RIB PROFILE					
		THICKNESS					
	ZINC COATED W/ BPI (SS)	RIB PROFILE					
		THICKNESS					
	ALUM. COATED TYPE 2 (SS)	RIB PROFILE					
		THICKNESS					
	POLYMER PRECOATED GALVANIZED (SS)	RIB PROFILE					
		THICKNESS					
STRUCTURAL PLATE PIPE / PIPE-ARCH	STR. PLATE ALUMINUM ALLOY (C)	CORR. PROFILE					
		THICKNESS					
	STR. PLATE ALUMINUM ALLOY W/ CFP (C)	CORR. PROFILE					
		THICKNESS					
	STR. PLATE STEEL (C)	CORR. PROFILE					
		THICKNESS **					
	STR. PLATE STEEL W/ CFP (C)	CORR. PROFILE					
		THICKNESS **					

SURVEY MONUMENT

STATION	EACH: A	B	C	D
LINE 'A'				
24+27		1		
31+10		1		
TOTAL		2		

R/W MARKERS

STATION	OFFSET ft	EACH
LINE 'A'		
23+55	30' RT.	1
24+25	40' RT.	1
27+20	60' RT.	1
27+20	50' RT.	1
28+85	55' LT.	1
28+85	85' LT.	1
29+20	50' RT.	1
29+55	85' LT.	1
30+25	45' LT.	1
31+10	40' RT.	1
31+15	25' LT.	1
31+50	25' RT.	1
TOTAL		12

*ALL R/W MARKERS TO BE FLUSH WITH GROUND.

DLZ

HAMILTON COUNTY — HAMILTON COUNTY HIGHWAY DEPARTMENT — INDIANA

MISCELLANEOUS TABLES

DRAWN: DPH CHK'D. JFM
DESIGNED: JFM APPRV'D: BMS
DATE: SEPTEMBER 1, 2021
HORIZ. SCALE: N/A
VERT. SCALE:
PROJECT NUMBER PB-18-0006 1863-2011-90

NO.	REVISION	BY	DATE

BRIAN M. SMITH REGISTERED No. 10100213 STATE OF INDIANA PROFESSIONAL ENGINEER
9/1/2021
DLZ INDIANA, LLC

SHEET 31 OF 37
DRAWING NUMBER 2011BS01

Date: September 02, 2021, 4:14pm File: X:\Projects\GFL\2018\1863\201190 Hamilton #72\DWG\2011BS01.dwg Layout Tab: 0985BS01 – Summary (2)

BEGIN PROJECT
STA. 24+27.00 LINE 'A'

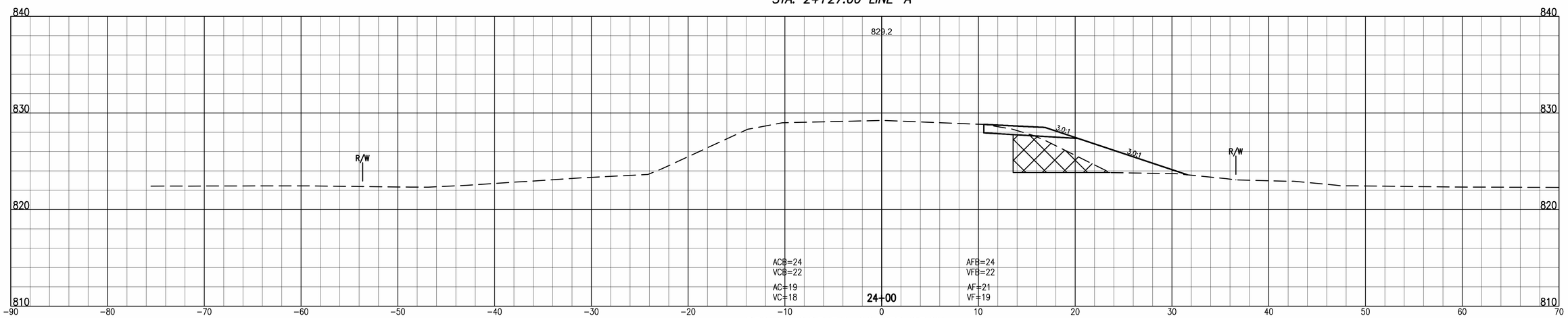

BEGIN INCIDENTAL CONSTRUCTION
STA. 23+65.00 LINE 'A'

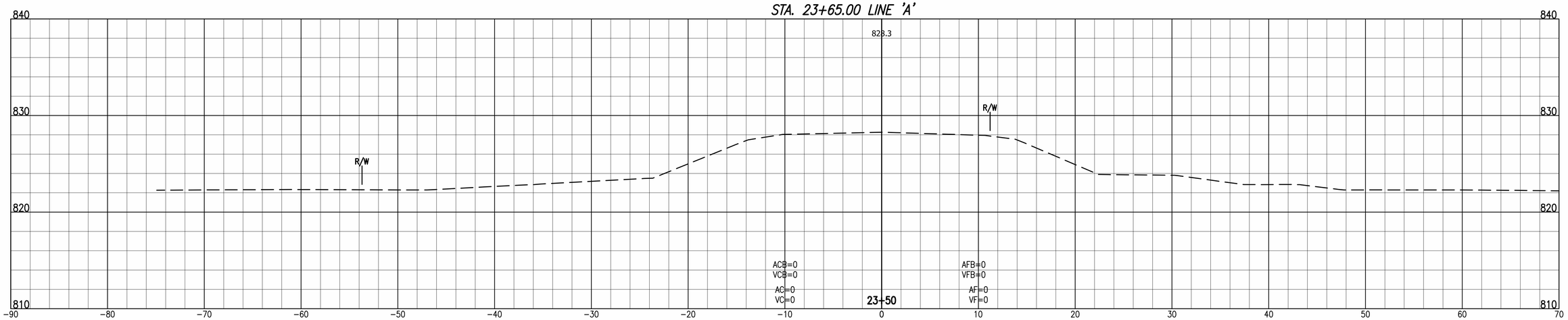

DLZ

HAMILTON COUNTY INDIANA

HAMILTON COUNTY
HIGHWAY DEPARTMENT

CROSS SECTIONS
LINE 'A'

DRAWN: DPH	CHK'D. JFM		
DESIGNED: JFM	APPRV'D: BMS		
DATE: SEPTEMBER 1, 2021			
HORIZ. SCALE: 1" = 5'			
VERT. SCALE: 1" = 5'			
PROJECT NUMBER PB-18-0006 1863-2011-90			

NO.	REVISION	BY	DATE

DLZ INDIANA, LLC

SHEET 32
OF 37

DRAWING NUMBER
CS0001

Date: August 30, 2021, 9:15pm
File: X:\Projects\GFL\2018\1863\201190 Hamilton #72\civil\C3D\CS0001.dwg Layout Tab: Line A (1)

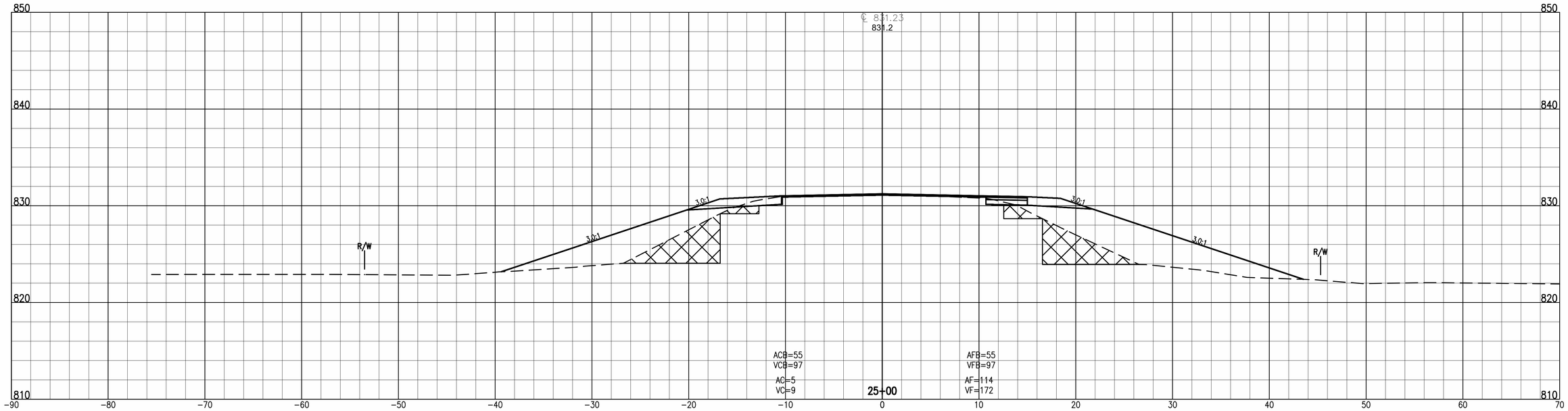

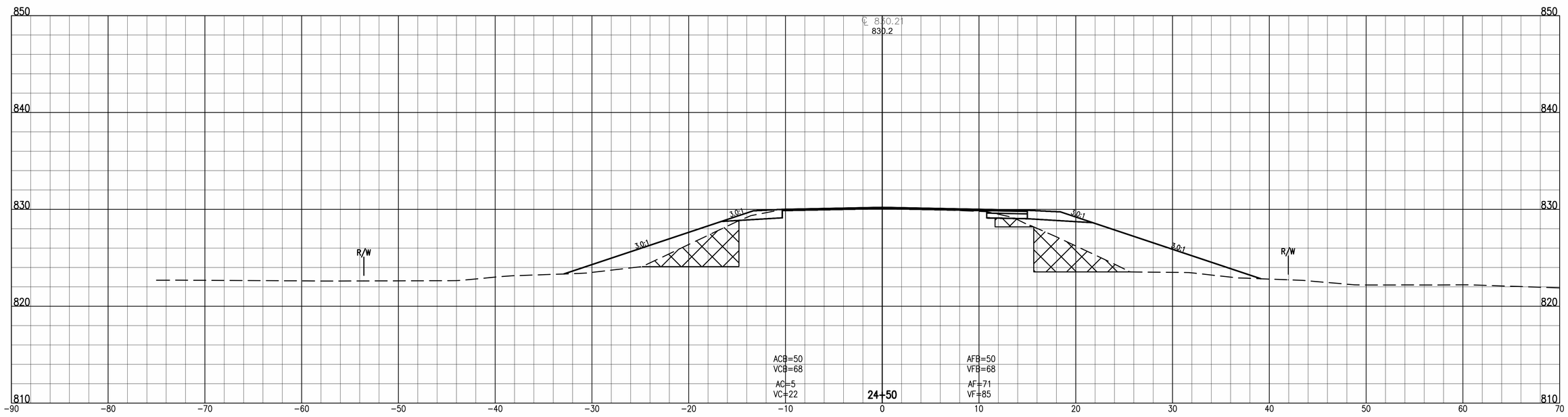

DLZ

HAMILTON COUNTY INDIANA

HAMILTON COUNTY
HIGHWAY DEPARTMENT

CROSS SECTIONS
LINE 'A'

DRAWN: DPH	CHK'D. JFM		
DESIGNED: JFM	APPRV'D: BMS		
DATE: SEPTEMBER 1, 2021			
HORIZ. SCALE: 1" = 5'			
VERT. SCALE: 1" = 5'			
PROJECT NUMBER PB-18-0006 1863-2011-90			

NO.	REVISION	BY	DATE

DLZ INDIANA, LLC

SHEET 33
OF 37

DRAWING NUMBER
CS0001

Date: August 30, 2021, 9:16pm
File: X:\Projects\GFL\2018\1863\201190 Hamilton #72\civil\C3D\CS0001.dwg Layout Tab: Line A (2)

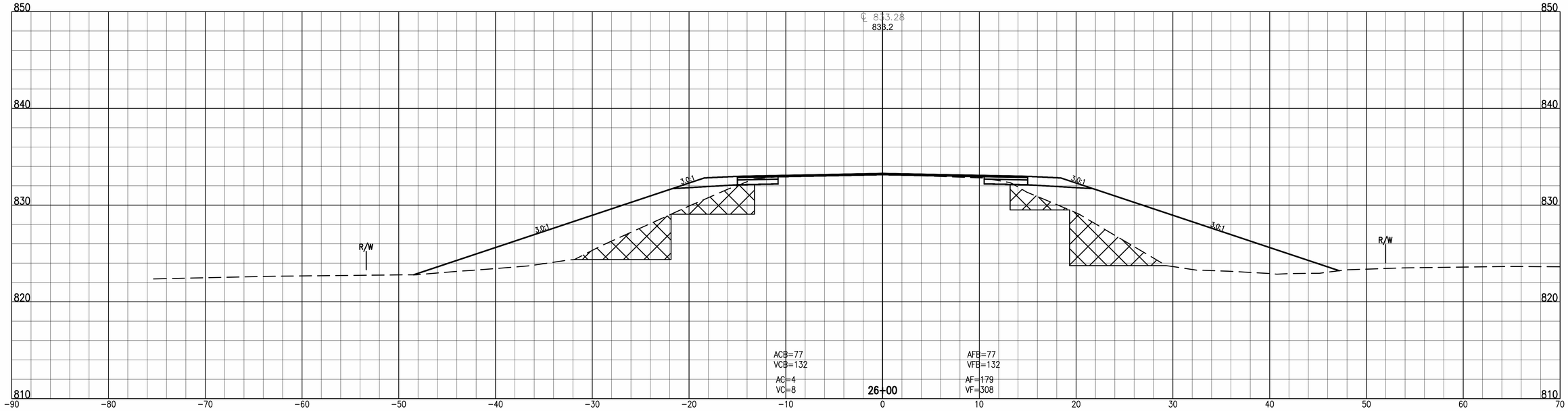

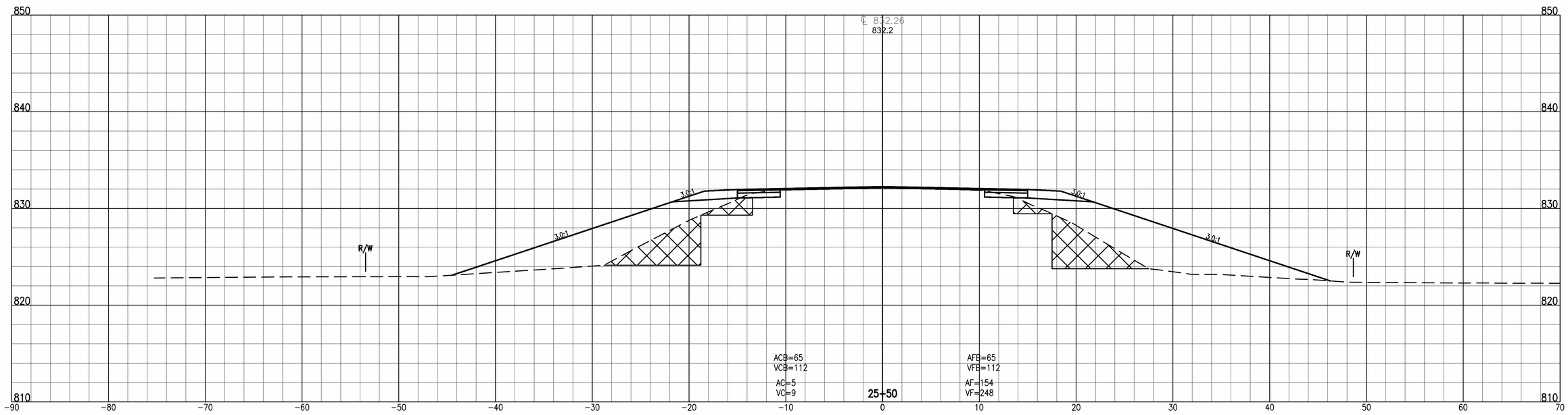

DLZ

HAMILTON COUNTY INDIANA

HAMILTON COUNTY
HIGHWAY DEPARTMENT

CROSS SECTIONS
LINE 'A'

DRAWN: DPH	CHK'D. JFM		
DESIGNED: JFM	APPRV'D: BMS		
DATE: SEPTEMBER 1, 2021			
HORIZ. SCALE: 1" = 5'			
VERT. SCALE: 1" = 5'			
PROJECT NUMBER PB-18-0006 1863-2011-90			

NO.	REVISION	BY	DATE

DLZ INDIANA, LLC

SHEET 34
OF 37

DRAWING NUMBER
CS0001

Date: August 30, 2021, 9:16pm
File: X:\Projects\GFL\2018\1863\201190 Hamilton #72\civil\C3D\CS0001.dwg Layout Tab: Line A (3)

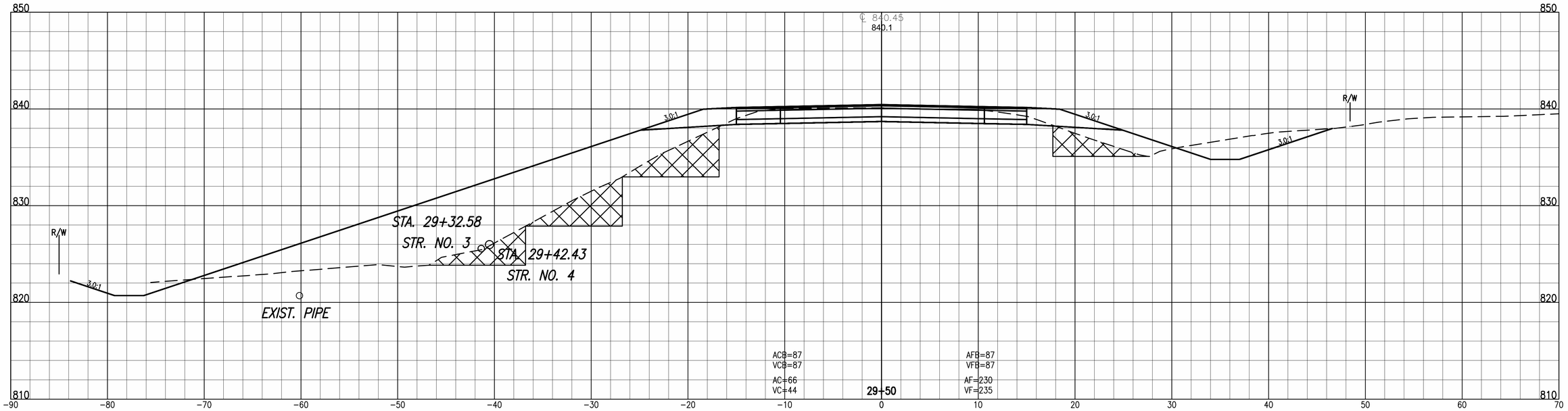

END PAVING EXCEPTION
STA. 29+49.54 LINE 'A'

BEGIN PAVING EXCEPTION
STA. 26+84.46 LINE 'A'

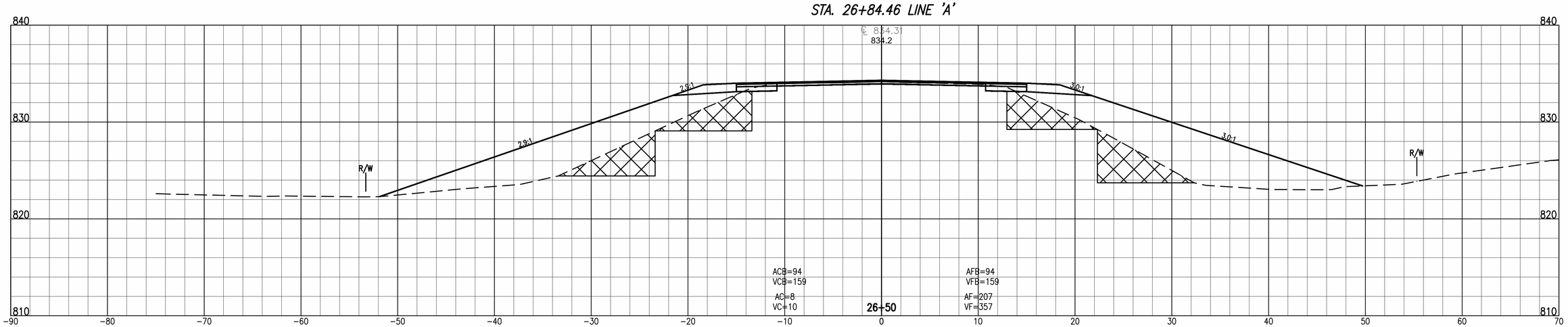

DLZ

HAMILTON COUNTY INDIANA

HAMILTON COUNTY
HIGHWAY DEPARTMENT

CROSS SECTIONS
LINE 'A'

DRAWN: DPH	CHK'D. JFM		
DESIGNED: JFM	APPRV'D: BMS		
DATE: SEPTEMBER 1, 2021			
HORIZ. SCALE: 1" = 5'			
VERT. SCALE: 1" = 5'			
PROJECT NUMBER PB-18-0006 1863-2011-90			

NO.	REVISION	BY	DATE

DLZ INDIANA, LLC

SHEET 35
OF 37
DRAWING NUMBER
CS0001

Date: August 30, 2021, 9:17pm
File: X:\Projects\GFL\2018\1863\201190 Hamilton #72\civil\C3D\CS0001.dwg Layout Tab: Line A (4)

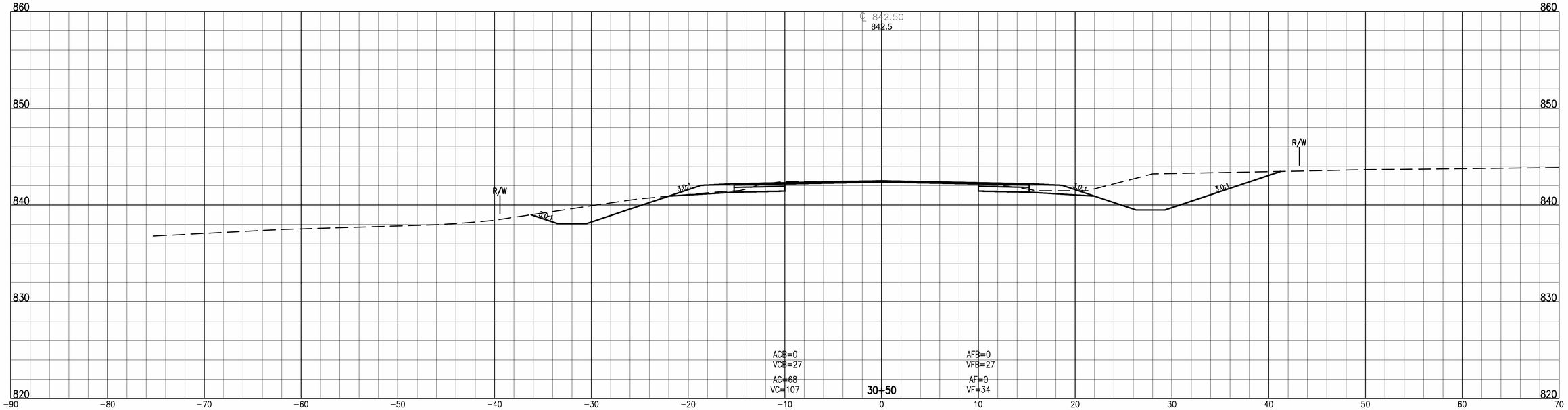

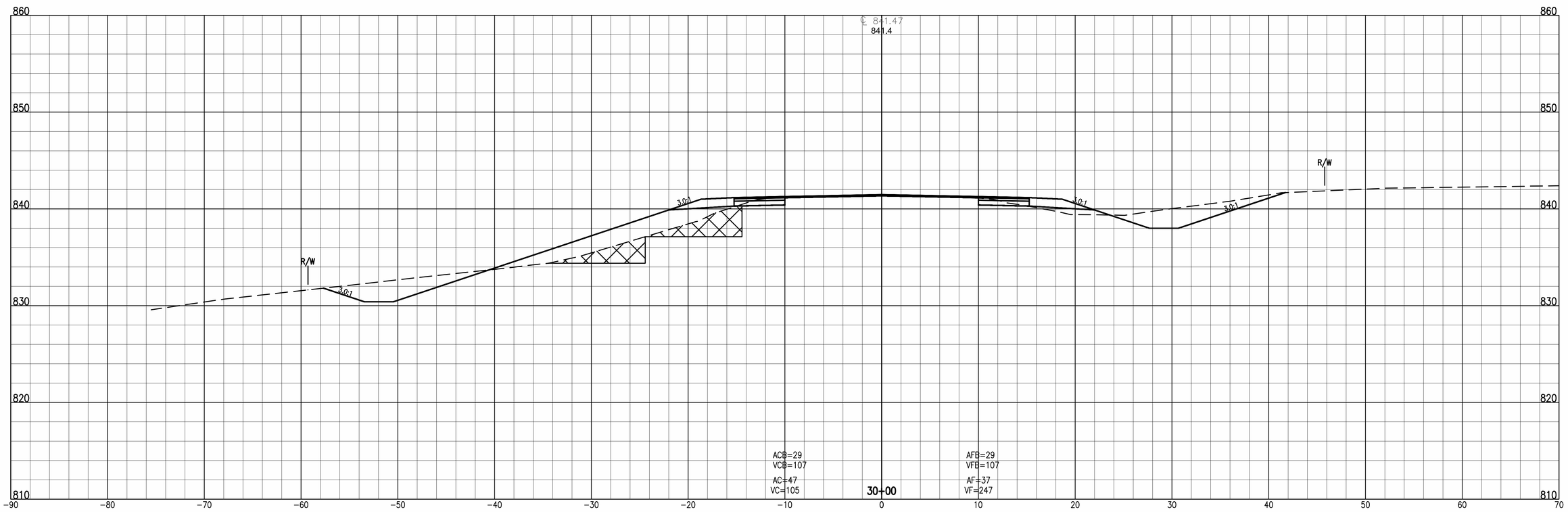

DLZ

HAMILTON COUNTY

INDIANA

HAMILTON COUNTY
HIGHWAY DEPARTMENT

CROSS SECTIONS
LINE 'A'

DRAWN: DPH	CHK'D. JFM		
DESIGNED: JFM	APPRV'D: BMS		
DATE: SEPTEMBER 1, 2021			
HORIZ. SCALE: 1" = 5'			
VERT. SCALE: 1" = 5'			
PROJECT NUMBER PB-18-0006 1863-2011-90			

NO.	REVISION	BY	DATE

DLZ INDIANA, LLC

SHEET 36
OF 37

DRAWING NUMBER
CS0001

Date: August 30, 2021, 9:17pm
File: X:\Projects\GFL\2018\1863\201190 Hamilton #72\civil\C3D\CS0001.dwg Layout Tab: Line A (5)

END INCIDENTAL CONSTRUCTION
STA. 31+40.00 LINE 'A'

END PROJECT
STA. 31+10.00 LINE 'A'

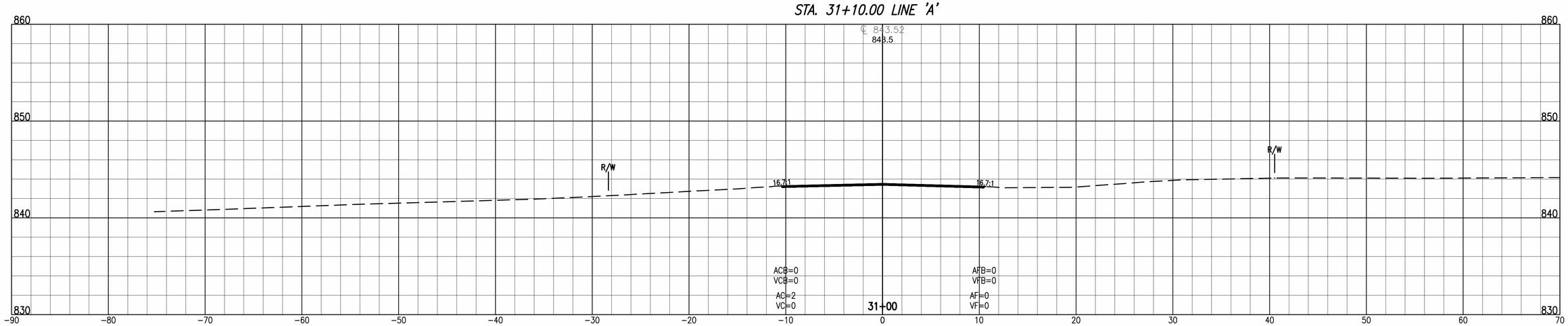

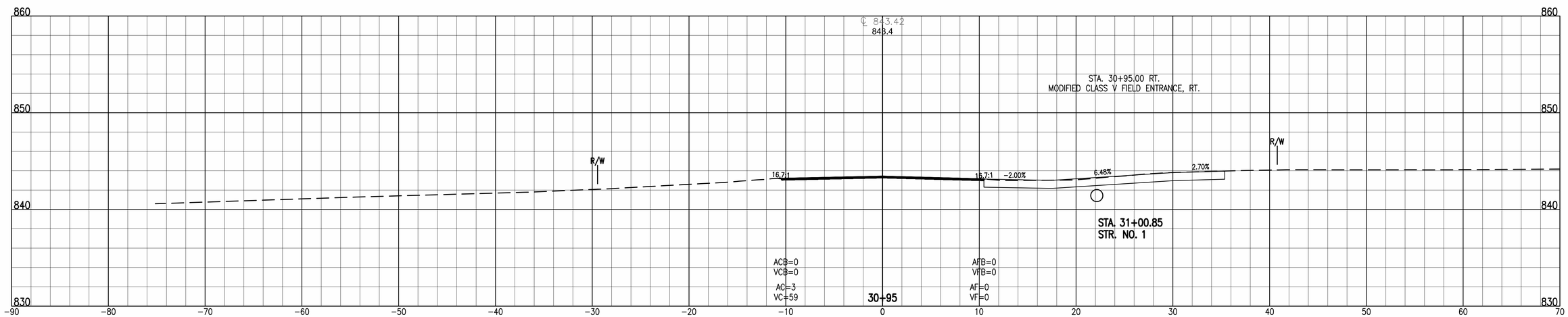

Date: August 30, 2021, 9:17pm
File: X:\Projects\GFL\2018\1863\201190 Hamilton #72\civil\C3D\CS0001.dwg Layout Tab: Line A (6)

DLZ

HAMILTON COUNTY INDIANA

HAMILTON COUNTY
HIGHWAY DEPARTMENT

CROSS SECTIONS
LINE 'A'

DRAWN: DPH	CHK'D. JFM		
DESIGNED: JFM	APPRV'D: BMS		
DATE: SEPTEMBER 1, 2021			
HORIZ. SCALE: 1" = 5'			
VERT. SCALE: 1" = 5'			
PROJECT NUMBER PB-18-0006 1863-2011-90			

NO.	REVISION	BY	DATE

DLZ INDIANA, LLC

SHEET 37
OF 37
DRAWING NUMBER
CS0001