Advanced Enviro-Septic™ and Enviro-Septic®
Wastewater Treatment Systems
Indiana Design and Installation Manual

October 2005 Edition with March 2007 Revisions

Including September 2009 Training Updates and Worksheets

September 2010 Approval for use with the Advanced Enviro-Septic™ System

© 2010 Presby Environmental, Inc. All Rights Reserved

PRESBY ENVIRONMENTAL, INC.
INNOVATIVE SEPTIC TECHNOLOGIES

143 Airport Rd., Whitefield, NH 03598
Tel: 1-800-473-5298 Fax: (603) 837-9864
www.PresbyEnvironmental.com info@presbyeco.com

The information in this manual is subject to change without notice. Your suggestions and comments are welcome. Please contact us at

Presby Environmental, Inc.
143 Airport Road
Whitefield, NH 03598
Phone: 1-800-473-5298 Fax: (603) 837-9864
Website: www.presbyenvironmental.com

Enviro-Septic® U.S. Patent Nos. 6,461,078; 5,954,451; 6,290,429; 6,899,359; 6,792,977 with other patents pending. Canadian Patent Nos. 2,228,995; 2,187,126 with other patents pending.
Enviro-Septic® is a registered trademark of Presby Environmental Inc.
© 2010 Presby Environmental, Inc. All rights reserved

Indiana State
Department of Health
An Equal Opportunity Employer

Mitchell E. Daniels, Jr.
Governor

Gregory N. Larkin, M.D., F.A.A.F.P.
State Health Commissioner

September 14, 2010

Mr. David Presby, President
Presby Environmental, Inc.
P.O. Box 617
Route 117
Sugar Hill, NH 03585

Dear Mr. Presby:

Re: Approval for the use of Advanced Enviro-Septic™ System

The Presby Environmental, Inc., Advanced Enviro-Septic™ System (AES) is hereby approved for use in Indiana by the Indiana State Department of Health (department), under the provisions of *410 IAC 6-8.1-31(g).*

The Advanced Enviro-Septic™ System is subject to

- the applicable provisions of ISDH Rule 410 IAC 6-8.1,
- the *Enviro-Septic® Wastewater Treatment System Indiana Design and Installation Manual for Residential Systems,* October 2005 Edition with March 2007 Revisions, except as modified in the *Technical Bulletin for Advanced Enviro-Septic™ in Indiana*, published by Presby Environmental, Inc. in September 2010, and
- the Indiana Standards for Advanced Enviro-Septic™ Systems, published by the department on September 14, 2010 (enclosed).

This approval may be revoked or modified by the department for non-compliance, or if it is documented that it would not be in the best interests of public health for approvals to continue.

If you wish to request administrative review of this *Approval* pursuant to Indiana Code 4-21.5-3-5, you must file a petition for review within fifteen (15) days after this *Approval* is received. The petition for review and petition for stay of effectiveness must be postmarked no later than September 30, 2010.

The petition for review must be in writing and must include facts demonstrating that:

- The petitioner is a person to whom the *Approval* is specifically directed;
- The petitioner is aggrieved or adversely affected by the *Approval*; or
- The petitioner is entitled to review under any law.

If the petition for review is not filed timely, this *Approval* becomes FINAL. Any petition for review and petition for stay of effectiveness must be submitted in writing to:

Court Administrator
Office of Legal Affairs, #3H
Indiana State Department of Health
2 North Meridian Street
Indianapolis, IN 46204

If you do not object to this plan submittal approval, you do not need to take any further action.

Sincerely,

Michael Mettler, Director
Environmental Public Health Division
317/233-7183
mmettler@isdh.in.gov

Enclosure

Indiana State Department of Health

Sanitary Engineering
2 North Meridian Street
Indianapolis, IN 46204

Indiana Standards for Advanced Enviro-Septic™ Systems

These standards apply to Advanced Enviro-Septic™ soil absorption field technology manufactured by Presby Environmental, Inc.

I. General requirements:

A. Advanced Enviro-Septic™ systems must be designed and installed according to the *Enviro-Septic® Wastewater Treatment System Indiana Design and Installation Manual for Residential Systems,* October 2005 Edition with March 2007 Revisions, except as modified in the *Technical Bulletin for Advanced Enviro-Septic™ in Indiana*, September 2010:

- the Advanced Enviro-Septic™ pipe is used in lieu of Enviro-Septic® pipe,
- the Advanced Enviro-Septic™ pipe must be positioned to ensure that the white Bio-Accelerator™ is centered along the bottom of the pipe. The Advanced Enviro-Septic™ pipes include a label that is clearly marked "This Side Up" to ensure correct placement during installation
- all systems must be vented,
- the Advanced Enviro-Septic™ may be substituted for the Enviro-Septic® pipe in an Enviro-Septic® system; <u>however, if a designer's plan specifies Advanced Enviro-Septic™, Enviro-Septic® cannot be substituted for Advanced Enviro-Septic™.</u>

The systems must be designed and installed in a manner that complies with *410 IAC 6-8.1, Residential Sewage Disposal Systems* and the *Best Practices, Plan Submittal* for all requirements not described in the documents listed above.

B. Advanced Enviro-Septic™ systems must comply with local ordinances, requirements and procedures.

C. Revisions to any of these documents must be approved by the department.

II. Requirements for certification and oversight:

A. Designers, installers, and all individuals involved in the permitting process must attend the *"Enviro-Septic® Designer and Installer Certification Course"* or its equivalent for the Advanced Enviro-Septic™ system presented by Presby Environmental, Inc., or its sanctioned representative, before they may design, install, or permit an Advanced Enviro-Septic™ system.

B. Presby Environmental, Inc., or its sanctioned representative, must:

1. Notify the department, at least ten (10) working days in advance, of each *"Enviro-Septic® Designer and Installer Certification Course"* or its equivalent for the Advanced Enviro-Septic™ System offered in Indiana;
2. Offer field demonstrations of Advanced Enviro-Septic™ system installations; and
3. Provide designers and installers ongoing consultation, as needed.

III. Requirements for recordkeeping:

A. Presby Environmental, Inc. must provide the department with records, on an ongoing basis, of:

1. Individuals certified for the design, installation or permitting of the Advanced Enviro-Septic™ systems in Indiana; and
2. Advanced Enviro-Septic™ systems installed in Indiana based on receipt of *"System Installation Forms."*

B. Installers of Advanced Enviro-Septic™ systems must provide Presby Environmental, Inc., a completed *"System Installation Form"* for each new, repaired, and replacement or expanded Advanced Enviro-Septic™ system installed in a given month within five (5) working days of the following month.

IV. Requirements for local health departments, installers, and owners:

A. Prior to construction of an Advanced Enviro-Septic™ system, the installer must notify the local health department, according to written procedures developed by the local health department, as to the start date of construction;

B. An Advanced Enviro-Septic™ system must not be constructed during periods when the soil is sufficiently wet to exceed its plastic limit. **Before installation of the sand bed the soils must pass soil plasticity tests.** Soil plasticity tests of the sand bed site include the evaluation of soil samples throughout the sand bed site, both at the surface and at the depth of installation, to assure that the plastic limit of the soil is not exceeded. The plastic limit of a soil is exceeded when the soil can be rolled between the palms of the hands to produce threads one-eighth (1/8) inch in diameter that do not easily break apart or crumble.

C. Construction of the Advanced Enviro-Septic™ system must proceed based on the approved plan. Any changes, alterations, or additions to the approved plan must be submitted by the installer to the local health department and approved prior to construction.

D. After construction of the Advanced Enviro-Septic™ system:

1. The owner must permit staff of the department and local health department to make observations of the system, and collect samples, at reasonable times.
2. The owner must immediately notify the local health department if the system shows signs of failure as defined in *410 IAC 6-8.1-8.*

Approval for the use of the Advanced Enviro-Septic™ system from Presby Environmental, Inc under these standards does not constitute an endorsement of this product.

Approved: September 14, 2010
Effective: September 14, 2010

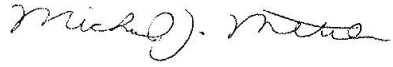

MICHAEL METTLER, DIRECTOR
ENVIRONMENTAL PUBLIC HEALTH DIVISION

Mitchell E. Daniels, Jr.
Governor

Judith A. Monroe, M.D.
State Health Commissioner

Indiana State Department of Health

An Equal Opportunity Employer

March 22, 2007

Mr. David Presby, President
Presby Environmental, Inc.
143 Airport Road
Whitefield, NH 03598

Dear Mr. Presby:

Re: Approval for the use of Enviro-Septic® Systems in Indiana

The use of Presby Environmental, Inc., Enviro-Septic® systems is hereby approved in Indiana by the Indiana State Department of Health (department), under the provisions of *410 IAC 6-8.1-31(g)*, subject to the conditions contained in the attached document entitled *Indiana Standards for Enviro-Septic® Soil Absorption Field Technology, Revised March 22, 2007*.

This approval may be revoked or modified by the department for non-compliance, or if it is documented that it would not be in the best interests of public health for approvals to continue.

If you want to request a review of this approval, you must petition the Director of Consumer Protection of the department for review, in writing, on or before April 13, 2007, demonstrating that you are aggrieved or adversely affected by this approval, or you are entitled to review under any law. If a petition for review is granted pursuant to IC 4-21.5-3-7, and you are not a party thereto, notices of any prehearing conferences, preliminary hearings, hearings, stays and other orders disposing of the proceedings may be obtained by sending a request for notice to the Director of Consumer Protection of the department.

Sincerely,

Howard W. Cundiff

HOWARD W. CUNDIFF, P. E., DIRECTOR
CONSUMER PROTECTION

cc: Bob Hilton
Alan Dunn
Attachment

Indiana State Department of Health

Sanitary Engineering
2 North Meridian Street
Indianapolis, IN 46204

Indiana Standards for Enviro-Septic® Soil Absorption Field Technology

These standards apply to Enviro-Septic® soil absorption field (SAF) technology manufactured by Presby Environmental, Inc.

I. General requirements:

A. Enviro-Septic® systems must be designed and installed according to the *Enviro-Septic® Wastewater Treatment System Indiana Design and Installation Manual for Residential Systems, October 2005* except as revised in:

- *Section C – Specifications, Requirements, and Restrictions: Revised Sections on Drainage, March 2007*;
- *Revised Section E: Installation, Handling, and Storage Requirements, March 2007*; and
- *Revised Quick Reference Guide for Soil Classes E-G Elevated and Subsurface Systems, March 2007*,

in a manner that complies with *410 IAC 6-8.1, Residential Sewage Disposal Systems* and the *Best Practices, Plan Submittal* for all requirements not described in the documents listed above.

B. Enviro-Septic® systems must comply with local ordinances, requirements and procedures.

C. Revisions to any of the documents listed in *Section A* must be approved by the department.

II. Requirements for certification and oversight:

A. Designers, installers, and all individuals involved in the permitting process, must attend the *"Enviro-Septic® Designer and Installer Certification Course"* presented by Presby Environmental, Inc., or its sanctioned representative, before they may design, install, or permit an onsite system containing an Enviro-Septic® system.

B. Presby Environmental, Inc., or its sanctioned representative, must:

1. Notify the department, at least ten (10) working days in advance, of each *"Enviro-Septic® Designer and Installer Certification Course"* offered in Indiana;
2. Offer field demonstrations of Enviro-Septic® system installations; and
3. Provide designers and installers ongoing consultation, as needed.

III. Requirements for recordkeeping:

A. Presby Environmental, Inc., must provide the department with records, on an ongoing basis, of:

1. Individuals certified for the design, installation or permitting of Enviro-Septic® systems in Indiana; and
2. Enviro-Septic® systems installed in Indiana based on receipt of *"System Installation Forms."*

B. Installers of Enviro-Septic® systems must provide Presby Environmental, Inc., a completed *"System Installation Form"* for each new, repaired, and replacement or expanded Enviro-Septic® system installed in a given month within five (5) working days of the following month.

IV. Requirements for local health departments, installers, and owners:

A. Prior to construction of an Enviro-Septic® system, the installer must notify the local health department, according to written procedures developed by the local health department, as to the start date of construction;

B. An Enviro-Septic® system must not be constructed during periods when the soil is sufficiently wet to exceed its plastic limit. **Before installation of the sand bed the soils must pass soil plasticity tests.** Soil plasticity tests of the sand bed site include the evaluation of soil samples throughout the sand bed site, both at the surface and at the depth of installation, to assure that the plastic limit of the soil is not exceeded. The plastic limit of a soil is exceeded when the soil can be rolled between the palms of the hands to produce threads one-eighth (1/8) inch in diameter that do not easily break apart or crumble.

C. Construction of the Enviro-Septic® system must proceed based on the approved plan. Any changes, alterations, or additions to the approved plan must be submitted by the installer to the local health department and approved prior to construction.

D. After construction of the Enviro-Septic® system:

1. The owner must permit staff of the department and local health department to make observations of the system, and collect samples, at reasonable times.
2. The owner must immediately notify the local health department if the system shows signs of failure as defined in *410 IAC 6-8.1-8*.

Approval for the use of the Enviro-Septic® SAF technology manufactured by Presby Environmental, Inc under these standards does not constitute an endorsement of this product.

Approved: October 7, 2005
Effective: October 7, 2005
Revised: March 22, 2007

Howard W. Cundiff

HOWARD W. CUNDIFF, P. E., DIRECTOR
CONSUMER PROTECTION

(This page intentionally blank)

TABLE OF CONTENTS

Advanced Enviro-Septic™ & Enviro-Septic®
Indiana Design & Installation Manual

Technical Bulletins:

Introduction of Advanced Enviro-Septic™ in Indiana (Sept. 2010).....i
Important Training Updates & New Forms (Dec. 2009).....iv
Preventing Excess Hydraulic Loading (Dec. 2009)….....vi

Worksheets:

Design Criteria Worksheet……..……..viii
Installation Checklist……..……xi

Details:

Perimeter Drain Notes……xiii
Cross-Section Details……..…..xiv
Raised Connections and Tee Baffles……..……xv

Indiana Design & Installation Manual:

Section	Page
A – Introduction	4
B – Definitions of Terms	5
C – Specifications, Requirements, and Restrictions	10
D – Design Criteria	15
E – Installation, Handling, and Storage Requirements	17

F – Effluent Distribution and System Configurations
• Methods of Effluent Distribution
  • Basic Serial
  • Combination Serial
  • Multiple Bed
• Subsurface Bed Systems
• Elevated Bed Systems
	23

G – Non-Conventional System Configurations	33
H – Flood Dose System Requirements	36
I – Venting Requirements	37
J – Bacteria Rejuvenation and System Expansion	40
K – Enviro-Septic® Soil Classes	42
Quick Reference Guide for Soil Classes A-D	45
Quick Reference Guide for Soil Classes E-G	49
Slope Design Chart	64
Index	65
System Installation Form	Appendix A
Enviro-Septic® Wastewater Treatment System Operating Manual	Appendix B

(This page intentionally blank)

PRESBY ENVIRONMENTAL, INC.

800-473-5298 www.PresbyEnvironmental.com

TECHNICAL BULLETIN

Introduction of Advanced Enviro-Septic™ in Indiana

Advanced Enviro-Septic™ is now available in Indiana: Presby Environmental, Inc. continually seeks to offer the latest and most effective technological advances to their customers. We are proud to announce a new Indiana Department of Health Approval (issued September 2010) for the Advanced Enviro-Septic™ Treatment System ("AES"). Advanced Enviro-Septic™ is the "next generation" of our effective and reliable Enviro-Septic® technology. AES has been thoroughly tested and proven to treat wastewater as well as or better than mechanical devices and advanced treatment units (ATU's). The Advanced Enviro-Septic™ System is non-mechanical, provides combined treatment and dispersal, and does not require replacement media, special maintenance or electricity. (Refer to full text approval letter available on our website, www.PresbyEnvironmental.com.)

Product Enhancement: AES provides superior treatment and dispersal processes as a result of the addition of Bio-Accelerator™. This proprietary enhancement filters additional solids from effluent, enhances and accelerates treatment, facilitates quick start-up after periods of non-use, provides additional surface area for bacterial growth, promotes even distribution, and further protects outer layers and the receiving surfaces so they remain permeable. Accelerated bacterial treatment processes make AES an excellent choice for properties that receive intermittent or seasonal use. By protecting the receiving surfaces better, treatment, function and longevity are all improved.

Design and Installation of AES Systems in Indiana: The Design and Installation criteria for AES are nearly identical to those for Enviro-Septic®; the only **differences** are:

1. To ensure that pipes are positioned so that the white Bio-Accelerator™ is centered along the bottom of the pipe. The AES pipes include a label that is clearly marked "THIS SIDE UP" to ensure correct placement during installation, and
2. Venting is mandatory for AES systems.

The State of Indiana has approved AES under the same terms and conditions and using the same manual as is currently being used for Enviro-Septic®. It is acceptable to substitute AES into a plan for an Enviro-Septic® system; <u>however, if a designer's plan specified AES, Enviro-Septic® cannot be substituted for AES</u>. For a limited time during this transition, we will continue to sell existing Enviro-Septic® inventory on hand in Indiana to accommodate customers who have already submitted plans for or contracted for an Enviro-Septic® system. New orders will be fulfilled with Advanced Enviro-Septic™. Industry Professionals who are certified to design/install Enviro-Septic® in Indiana will not be required to re-certify in order to use AES. However, we do encourage you to visit our website to learn more about the many advantages offered by Advanced Enviro-Septic™.

How can Advanced Enviro-Septic™ be used? For the majority of residential and commercial applications, AES is installed in a bed format (subsurface or elevated mound) with dispersal after treatment into underlying soils; in other words, it is used in the same way as Enviro-Septic®. Like Enviro-Septic®, AES provides *exceptional* design flexibility by offering a multitude of possible shapes and configurations that allow each system to be customized to suit the soil conditions and topography of the site. Advanced Enviro-Septic™ designs are required to include venting. Bed sizing, loading rates, minimum/maximum line lengths, separation distances, construction procedures, maintenance instructions, etc. for Advanced Enviro-Septic™ are the same as for original Enviro-Septic®. The only difference to be noted when installing AES is to ensure that the pipe is positioned so that the Bio-Accelerator™ layer (white geotextile) is at the bottom; each pipe is clearly labeled "THIS SIDE UP" to alert installers to the proper positioning of the pipe.

What are the results of Advanced Enviro-Septic™ testing? Ongoing testing of the Advanced Enviro-Septic™ System has proven that it not only meets but far exceeds the effluent quality standards set forth in the US EPA's Tertiary Treatment guidelines. During the most recent testing of the product at the Bureau de Normalization du Quebec ("BNQ"), the effluent treated by Advanced Enviro-Septic™ averaged <2 mg/L of CBOD5 and <2 mg/L TSS, in addition to achieving significant removal of fecal coliforms.

Results of Performance Testing by BNQ 04/06/08 to 10/04/08				
Parameter Measured (Averages)	EPA Tertiary Treatment Guidelines	NSF-40 Class I (EPA Secondary)	BNQ Advanced Secondary	**Advanced Enviro-Septic™ Test Results**
CBOD5 (mg/L)	10	< 25	< 15	**<2**
TSS (mg/L)	10	< 30	< 15	**<2**
Fecal Coliforms (CFU/100 mL)	1,000	n/a	50,000	**218**

Advanced Enviro-Septic™'s Track Record: While new to the US market, Advanced Enviro-Septic™ has a track-record of reliable performance for several years throughout Canada, where it has achieved BNQ certification for both Secondary and Advanced Secondary treatment (see BNQ Certificate Number 890, www.bnq.qc.ca). AES improves upon and incorporates all the features of original Enviro-Septic®, which has earned an excellent reputation for effectiveness and reliability based on its successful use in tens of thousands of systems in New England, Canada and the Midwest. AES provides accelerated and enhanced environmental protection comparable to a mechanical device in a significantly smaller footprint than conventional systems like pipe and stone and chamber leaching systems. By offering exceptional performance that is comparatively inexpensive to own and simple to maintain, Advanced Enviro-Septic™ offers consumers an environmentally responsible alternative that is also cost-effective.

Prepared by,

Presby Environmental, Inc.
143 Airport Road
Whitefield, NH 03598
(800) 473-5298
info@presbyeco.com
www.PresbyEnvironmental.com

Dated: September 8, 2010

© Presby Environmental, Inc. All Rights Reserved

ADVANCED ENVIRO-SEPTIC™ WASTEWATER TREATMENT SYSTEM

TEN STEPS OF WASTEWATER TREATMENT: ADVANCED ENVIRO-SEPTIC™ TREATS EFFLUENT MORE EFFICIENTLY TO PROVIDE LONGER SYSTEM LIFE AND TO PROTECT THE ENVIRONMENT.

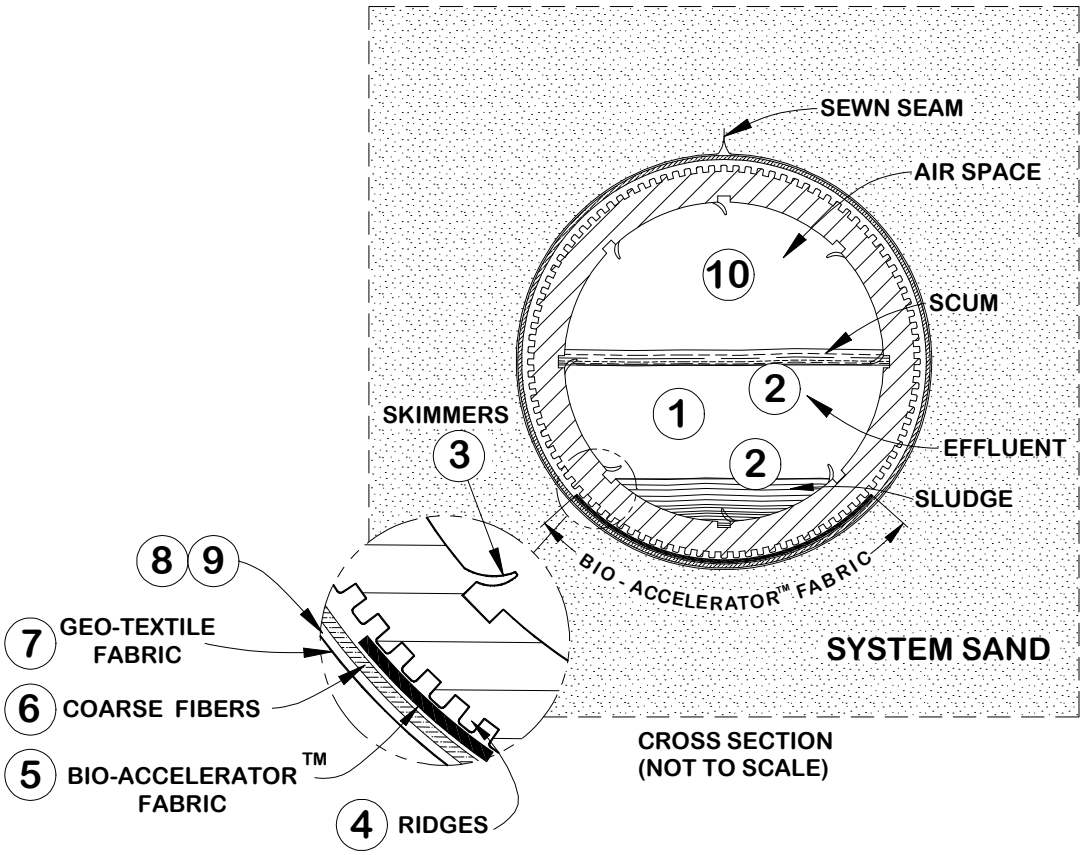

STAGE 1: WARM EFFLUENT ENTERS THE PIPE AND IS COOLED TO GROUND TEMPERATURE.

STAGE 2: SUSPENDED SOLIDS SEPARATE FROM THE COOLED LIQUID EFFLUENT.

STAGE 3: SKIMMERS FURTHER CAPTURE GREASE AND SUSPENDED SOLIDS FROM THE EXITING EFFLUENT.

STAGE 4: PIPE RIDGES ALLOW THE EFFLUENT TO FLOW UNINTERRUPTED AROUND THE CIRCUMFERENCE OF THE PIPE AND AID IN COOLING.

STAGE 5: BIO-ACCELERATOR™ FABRIC SCREENS ADDITIONAL SOLIDS FROM THE EFFLUENT AND DEVELOPS A BIOMAT WHICH PROVIDES TREATMENT AND ENSURES ACCELERATED BIOMAT DEVELOPMENT.

STAGE 6: A MAT OF COARSE RANDOM FIBERS SEPARATES MORE SUSPENDED SOLIDS FROM THE EFFLUENT.

STAGE 7: EFFLUENT PASSES INTO THE GEO-TEXTILE FABRICS AND GROWS A PROTECTED BACTERIAL SURFACE.

STAGE 8: SAND WICKS LIQUID FROM THE GEO-TEXTILE FABRICS AND ENABLES AIR TO TRANSFER TO THE BACTERIAL SURFACE.

STAGE 9: THE FABRICS AND FIBERS PROVIDE A LARGE BACTERIAL SURFACE TO BREAK DOWN SOLIDS.

STAGE 10: AN AMPLE AIR SUPPLY AND FLUCTUATING LIQUID LEVELS INCREASE BACTERIAL EFFICIENCY.

PRESBY ENVIRONMENTAL, INC.
Protecting You and the Environment

143 Airport Rd., Whitefield, NH 03598
Tel: 1-800-473-5298 Fax: (603) 837-9864
www.presbyenvironmental.com info@presbyeco.com

*** * * U R G E N T * * ***
INDIANA TRAINING UPDATE
PREVENTING EXCESS HYDRAULIC LOADING

TO: All Certified Indiana Enviro-Septic® Professionals
FROM: Presby Environmental, Inc. and Environmental Septic Solutions, Inc.
RE: Important Training Updates & New Forms
DATED: December, 2009

As you may know, ISDH conducted a number of Enviro-Septic® site inspections this spring to assess how well these systems are functioning. While the vast majority of Enviro-Septic® systems were installed correctly and functioning properly, there were a few design/installation errors that were seen frequently enough to warrant corrective action. The various problems identified had one thing in common—the result was hydraulic overload (flooding) of the treatment field. Since Enviro-Septic® is an aerobic treatment system, saturated conditions are detrimental to its function. Not surprisingly, these problems became most noticeable during the heavy rains that occurred this spring, when onsite systems were subjected to heavy storm water run-off.

There are a few relatively easy installation techniques that are very effective in redirecting surface waters away from the treatment field, including crowning during final grading and the installation of swales. Perimeter drains are also quite effective at lowering the seasonal high water table when properly installed and maintained. It is also important that foundation drains, sump pumps and gutter systems not discharge in the system area. The enclosed Training Update provides detailed information about potential causes of hydraulic overloading and what can be done to prevent it. There is also an update providing details illustrating the correct installation methods for raised connections and tee baffles in the distribution box.

In order to assist our certified Indiana designers and installers, we have developed the enclosed Design Worksheet and Installation Checklist in cooperation with ISDH. In an effort to ensure consistent, high-quality design and installation of Enviro-Septic® systems, PEI and ISDH are **strongly** recommending the use of these forms. We trust you will find that they provide a concise collection of relevant information in a user-friendly format. Consistent use of these forms by all designers and installers will also make it easier for the local health departments to perform their required inspections. In order to

assure that everyone involved is "on the same page," completed forms are to be provided to the designer, the installer, the system owner and the local health officer. A helpful, informative presentation on the use of the new worksheets is available on the Indiana page of our website, www.presbyenvironmental.com.

During these site inspections, it was discovered that some issues were the result of the system owner's actions after the system was installed. For instance, some homeowners were found to have filled in or altered swales, or failed to inspect the outlets of their perimeter drain to remove obstructions, or directed water from drains or gutter systems to a location where it was having a detrimental effect on the system's function. Some system owners actually had no idea where their treatment field was located. In an effort to educate homeowners about the proper use and care of an Enviro-Septic® system, we have developed an Owner's Manual that is available for download from our website, www.presbyenvironmental.com. We recommend that you print out a manual and provide one to each system owner before their new system is put into use, or direct owners to the website and encourage them to familiarize themselves with these important instructions that will enhance their system's function and maximize its longevity.

No one wants more "paperwork." We want our systems to work as intended, and we know you do, too. While Enviro-Septic® is "Technology New to Indiana," it has been used with exceptional results for over 15 years throughout New England and across Canada, with about 100,000 systems in the ground. There is a learning curve when introducing anything "new;" but, once you are accustomed to working with Enviro-Septic®, we are confident you will find our system to be quicker, easier, less expensive and more versatile to design and install. These forms give you the benefit of knowledge and experience we've developed through the years, and we're confident that using them will make your job easier and help ensure the quality of Enviro-Septic® designs and installations in Indiana.

If you have any questions about the enclosed Training Update, Design Worksheet or Installation Checklist, please do not hesitate to contact us. Thank you for choosing to recommend the Enviro-Septic® System to your clients. We look forward to many years of working together with you to provide an effective solution for onsite wastewater treatment in Indiana.

Best regards,

David W Presby
Presby Environmental, Inc.

Michael P. Market
Environmental Septic Solutions, Inc.

PRESBY ENVIRONMENTAL, INC.
800-473-5298 www.presbyenvironmental.com

TECHNICAL BULLETIN

*** * * U R G E N T * * ***
INDIANA TRAINING UPDATE December 2009
PREVENTING EXCESS HYDRAULIC LOADING

Abstract: *The performance and longevity of any onsite wastewater treatment system can be adversely affected by regular, sustained hydraulic loading in excess of daily design flow. Discussed below are certain design and installation techniques which can prevent onsite systems from being flooded by surface and/or ground water flows. Saturated conditions are detrimental to the function of the Enviro-Septic® System, which relies on aerobic conditions to perform optimally.*

Background: During recent inspections of Enviro-Septic® Systems in Indiana, a pattern of common installation errors became apparent. While these errors would be detrimental to **any** onsite system's function, this Technical Bulletin will focus on how these factors impact Enviro-Septic® Systems and how such problems can be corrected and/or avoided in future installations. Onsite systems are sized based on the expected amount of effluent they will treat on a daily basis, which is referred to as "daily design flow." It is important to ensure that each system is adequately sized, taking into consideration the actual number of occupants (if this increases flows beyond the daily design flow) and whether the system will be subjected to additional loading from jetted tubs, water softeners, water purifiers, etc. The volumes of water utilized by such fixtures and appliances should be included in design daily flow calculations in order to size a system properly. Onsite systems are not designed to handle additional water from roof drains, foundation drains, sump pumps, irrigations systems, gutter systems, etc. Since the water from such systems does not require treatment, it can be safely dispersed in a location where it will not impact the onsite system.

Common Causes of Excessive Hydraulic Loading: While an onsite system can easily handle isolated, occasional surges in volume either of effluent or storm water runoff, prolonged dosing in excess of what the system was designed to handle can be problematic. Some of the more common sources of excess hydraulic loading discovered were the result of drain or gutter systems discharging into or near the treatment field, inadequate perimeter drains, ineffective surface diversion/swale installations, and leaking septic tank connections. Recent inspections of Enviro-Septic® systems in Daviess County by the Daviess County Health Department, ISDH, Presby Environmental and Environmental Septic Solutions revealed that these were the most common installation errors contributing to hydraulic overloading of onsite systems.

Also, leaks in the plumbing system can also result in overloading the onsite system and should be repaired immediately. Care should also be taken to ensure that the septic tank and all of its connections, access ports, risers, etc. are properly sealed and watertight to prevent ground water from infiltrating and overburdening the system.

Lowering Ground Water with Perimeter Drains: For Indiana sites where the seasonal high water table ("SHWT") is too close to the surface, a perimeter drain can be used to lower the SHWT. **NOTE: It is preferable in such situations to design an elevated system rather than attempt to lower the SHWT with a drain**. However, there are times when even an elevated system may require a perimeter drain to lower the SHWT. In all cases where a perimeter drain is required, it is crucial that the drain be located and constructed properly. Please see attached Perimeter Drain Notes. A properly constructed perimeter drain surrounds the system on all four

sides and is a minimum of 10 ft. away from the outer edges of the System Sand bed. Ongoing maintenance by the owner to ensure that the outlet remains unobstructed is **essential** to proper functioning; animal guards are required on the drain outlet to prevent animal activity that could result in obstruction. No other drainage systems (such as foundation drains, sump pumps, etc.) should be incorporated into the perimeter drain design or discharge in the area of the onsite system.

Redirecting Surface Water Flows with Diversions and Proper Grading: In selecting the location of the onsite system, it is important to consider the surrounding topography and select a site where surface and subsurface waters do not naturally converge. Adequate soil cover material (loam/topsoil, minimum of 6 in. deep) must be installed above the System Sand; this cover material should be "crowned" to direct surface waters away from the system. Crowning is a very simple procedure: simply make the center of the system area the "high" point and grade the cover material so it gently slopes away from the center; keep in mind there will be some natural settling of cover material. We have found that poor final grading, or using less than the required amount of soil cover above a system, results in "pockets" which hold surface water, allowing it to infiltrate the system and possibly cause saturation. After final grading, the site must be seeded and mulched or sodded immediately to prevent erosion; only shallow-rooted vegetation such as grass or wildflowers should be planted above an onsite system. There should be no trees or gardens planted within ten (10) feet of the system; the State of Indiana does not permit "hardscape" (paving, patios, driveways, parking lots, etc.) to be installed above the system.

Swales are another means of directing surface water away from the system. Swales are installed in undisturbed soil in order to intercept and divert surface water flows away from the system. They should be located a minimum of 10 ft. from the outer edge of the System Sand bed (if a perimeter drain is used, the swale is located above or immediately upslope from the perimeter drain area). Swales must have a positive grade of at least 0.2 feet per 100 feet to prevent standing water. Swales should be sufficiently deep to redirect surface water away from the treatment field effectively. (Please see attached Perimeter Drain Notes.) It is also important to explain the purpose of swales to the system owner so they will not alter them or backfill them. The Monroe County Indiana Health Department recently issued a directive making swales mandatory if a perimeter drain is used. They also stressed the importance of explaining the purpose of swales to the system owner, since in many cases properly installed swales are filled in by homeowners or landscapers who do not understand how critical these surface diversions are to the onsite system's function.

Conclusion: Proper site selection, accurate sizing, adequate perimeter drains, and well-constructed surface diversions (grading and swales) are effective in preventing excess hydraulic loading to onsite systems. Prolonged saturated conditions compromise the function of all onsite systems and measures should be taken to redirect ground and surface water away from the treatment field. Homeowners should be made aware of the importance of dispersing water other than wastewater away from the onsite system. If you have any questions about the information in this Training Update, please contact Presby Environmental or Environmental Septic Solutions for technical assistance and further guidance.

Prepared by,
Presby Environmental, Inc.
143 Airport Road
Whitefield, NH 03598
(800) 473-5298
email: info@presbyeco.com
www.presbyenvironmental.com
Environmental Septic Solutions, Inc.
16 West Jennings Street
Newburgh, IN 47630
(812) 457-3144 (cell – Michael P. Market)
email: essmpm@att.net

Enviro-Septic® Wastewater Treatment System DESIGN CRITERIA WORKSHEET

Manufactured by Presby Environmental, Inc. (800) 473-5298
Distributed in Indiana exclusively by Environmental Septic Solutions, Inc. (812) 457-3144

DESIGNED BY:	**INSTALLED BY:**
Name: Company: Address: Telephone: PEI Cert. #	Name: Company: Address: Telephone: PEI Cert. #
SYSTEM OWNER(S):	**SITE IDENTIFICATION:**
Name: Address: Telephone:	Address: Town: Map/Lot: Permit #: County:

***Note**: Presby Environmental, Inc. and Environmental Septic Solutions, Inc. strongly recommend the completion of these worksheets for all system designs to assure proper design criteria are utilized. Completed documentation to be retained by Designer, with copies provided to the Installer, system owner and the local health officer.*

Instructions to Designer: Complete all white sections by filling in blanks or circling

Soil Class (circle one)	**A*** **B** **C** **D** **E** **F** **G** **installations in A soils req. ISDH approval*		*Attach Site/Soil Evaluation Report.* *Refer to Soil Class Chart in manual.*
Number of Bedrooms (determines system size)	Sizing charts assume 150 gallons per day per bedroom # of bedrooms x 150 gallons per day = Daily Design Flow (Add 1 bedroom for each jetted tub 125 gal.+ capacity)		**_____# Bedrooms x 150 gpd = _____** **Daily Design Flow**
Required Minimum Separation Distance to SHWT or Limiting Layer (circle 24 in. or 30 in.)	**24 INCHES** (Design Flow <450 gpd PER BED) **30 INCHES** (Design Flow ≥ 450 gpd PER BED) ***Note: It is acceptable to divide flows greater than or equal to 450 gpd into multiple beds in order to use 24 in. separation distance.***		*Measured from the infiltrative surface (sand bed bottom/soil interface).*
Vertical Orientation of System (circle one)	**SUBSURFACE** (infiltrative surface 4 in. or more below orig. grade) **ELEVATED** (infiltrative surface < 4 in. below original grade)		*It is <u>always</u> preferable to raise the bed when a SHWT is encountered; however, a perimeter drain may still be required.*
Type of System (circle one)	**GRAVITY FED** **FLOOD DOSED**		*Flood dose frequency: minimum=design flow ÷6* *Maximum design flow ÷ 8 (per day)*
Configuration (circle one)	**BASIC SERIAL** (req'd. E-G soils)	**COMBINATION**	**NON-CONVENTIONAL** (A-D soils only)
Site Slope/System Slope	**LEVEL (0-1/2%)** **SLOPING _____%**		*6% max. slope for elevated systems* *15% max. slope for subsurface systems*
Depth to Limiting Layer	**_____ inches**	**Depth to SHWT**	**_____ ft.**
Perimeter Drain included? *(req'd. if SHWT is less than 24 in. from infiltrative surface)*	**YES** **NO** (circle one)	**Dispersal Area Width** (req'd. in E, F, G soils) *Note: No structures permitted in this area.*	**_____ ft.** (Min. 10 ft., Max. 25 ft.)
Minimum Drain Depth	**_____ in.**	**Bed Bottom at highest elevation of orig. grade**	**_____ in. below grade**.
High Vent from d-box?	**YES** **NO** (circle one)	*Flood dosed: High vent off d-box is req'd.* *Gravity: House (roof) vent is the high vent; no vent off d-box.* ***Low vent req'd. for ALL systems.*** *Note: 10 ft. min. differential btwn. High and Low vent inlets.*	

ENVIRO-SEPTIC® DESIGN CRITERIA WORKSHEET, page 2		
Distribution Box included?	**YES** **NO** (circle one)	*D-box to be installed on stable, compacted base. Insulate d-box in pumped systems to prevent freezing. Flow equalizers req'd. if dividing flow to multiple sections or beds.*
Minimum Enviro-Septic® pipe required	**_____ FT. OF ENVIRO-SEPTIC® PIPE REQ'D.** *(From Table A for A-D soils or Table D for E-G soils)*	*Amount of pipe req'd. is based on the # of bedrooms.*
Minimum Row (Line) Length *(Maximum row length is 100 ft.)*	**_____ FT. MINIMUM ROW (LINE) LENGTH** *(A&B soils 30 ft., C soils 40 ft., D soils 50 ft. SeeTable D for minimum row/line lengths in E-G soils. If result is greater than 100 ft., multiple beds are req'd.)*	*Ideal system shape is as long & narrow as the site will allow. All rows (lines) w/in a bed must be equal in length in E-G soils.*
Total Number of Rows (Lines)	**_____FT. PIPE REQ'D. ÷ MIN. ROW LENGTH _____ = _____ MIN. NUMBER OF ROWS** *(Round UP if result is not a whole number)* *(Refer to Table C for A-D soils or Table D for E-G soils)*	*All systems/beds require a minimum of 2 rows (lines).* *Easiest to work with 10 ft. increments.*
Determine System Sand bed length	**_____FT. MIN. + 2 FT. = _____ FT. SYSTEM SAND** **ROW LENGTH BED LENGTH**	*Bed length is always 2 ft. more than min. row (line) length.*
Determine System Sand bed width	**E-G Soils: Refer to Table D, BED WIDTH IS _____ FT.** **A-D Soils: Refer to Table C:** **_____ FT. SYSTEM + 2 FT. = _____ FT. SYSTEM** **WIDTH SAND BED WIDTH**	*System Sand always extends 1 ft. horizontally beyond pipe ends.*
Determine Center- to-Center Spacing	**E-G Soils: SPACING IS FIXED AT 1.5 FT.** **A-D Soils: Refer to Table B, SPACING IS _____ FT.** *(minimum spacing varies by soil class & slope)*	*Distance from the center of one row to the center of the adjacent row.*
Determine if Multiple Beds are required (Note: each bed must receive an equal amount of effluent. Total ft. of pipe in each bed can vary if necessary due to soil class variations)	*Multiple beds can be used to accommodate site constraints. Bed loading limit is 750 gpd; divide daily design flow by 750 to determine number of beds. Multiple beds req'd in E-G soils if Minimum Line Length exceeds 100 ft. It is acceptable to divide flows greater than 450 gpd into multiple beds in order to use 24 in. req'd. separation distance rather than 30 in.*	**YES** **NO** (circle one) **If "Yes":** **_____ # of Beds Req'd.**
If Multiple Beds are required, determine layout	**END-TO-END** **SIDE-TO-SIDE** (circle one) *Note: End-to-End configurations are preferred*	*End-to-End beds separated by a min. of 4ft. undisturbed soil.* *Side-to-Side beds separated by a minimum of 20 ft.*
Determine depth of System Sand req'd. below pipes	**12 INCHES** **6 INCHES** (if elevated) (if subsurface) (circle one)	*Elevated systems require an additional 6 in. of System Sand below the pipes.*

PROPOSED SYSTEM SUMMARY OF DESIGN CRITERIA :		
DESIGN CRITERIA:	**REQUIRED MINIMUM**	**ACTUAL PROVIDED IN DESIGN**
Total Enviro-Septic® Pipe (in ft.)	_____ FT.	_____ FT.
Row (Line) Lengths	_____ FT.	_____FT.
Numbers of Rows (Lines)	_____	_____
Center-to-Center Spacing	_____ FT.	_____ FT.
Number of Beds	_____	_____

By signing below, Designer confirms dimensions have been written in on the appropriate (one) cross section on the attached page and a copy of the plan or a sketch of the plan is attached to this worksheet. Designer further confirms that a copy of the completed worksheet has been provided to the installer, system owner, and local health officer.

Signed: _____ Dated: _____
(Print Name Here:) PEI Cert. #: _____

In the space below, sketch the Enviro-Septic® System design, including references to structures or other benchmarks to indicate system location on the site. Indicate "As Built" changes. Retain a copy with system documentation and provide a copy to the System Owner.

Site Address:_____ System Owner(s): _____
Installer's Name: _____ Date of Installation: _____

* NOT TO SCALE UNLESS NOTED*

Enviro-Septic® Wastewater Treatment System - Indiana Installation Checklist

Manufactured by Presby Environmental, Inc. (800) 473-5298 Distributed in IN by Environmental Septic Solutions (812) 457-3144

System Owner: _____ **Site Address:** _____

Instructions to Installer: Check box in left column to confirm each installation requirement has been met. After completion, provide a copy of this form to Designer, System Owner and Local Health Officer.

√	INSTALLATION REQMTS.	COMMENTS	REFERENCE
	Installation performed during appropriate weather conditions	Not installed on wet or frozen ground; protect against freezing; system covered with System Sand and cover material immediately after inspection.	Revised Sect. E, 3/2007, p. 19
	Proper site preparation before installation	No heavy equipment on system area and dispersal area; no scraping, compacting or smearing of receiving soils; excavated using toothed bucket only; organics removed. **Elevated systems**: till 7-14 in. deep, parallel to contour; install 6 in. System Sand, mix to create transition layer. **Subsurface systems**: rake furrows 2-6 in. deep w/ toothed bucket in entire bed area.	Revised Sect. E, 3/2007, p. 18-20
	Trees/Stumps in system location	Use mechanical "thumb" to minimize soil disturbance. Fill voids with System Sand. **Elevated systems**: remove all stumps 3 in. or larger, cut stumps less than 3 in. flush w/ original grade. **Subsurface systems**: remove all stumps/roots below grade.	Revised Sect. E, 3/2007, p. 21
	Correct System location	Confirm elevations and set-backs per plan; not located where surface or ground waters converge; designed and installed along contour; note any discrepancies or changes approved by local health department on "as built" plan; sketch system location on sheet provided, making reference to structures or benchmarks and indicating any "as-built" changes; provide copy of sketch to system owner.	Manual p. 11, p. 14
	System Sand meets specs.	IN DOT Specification 23 OR ASTM C-33 w/ less than 2% fines	Manual, p. 13
	Correct Amount of System Sand installed	6 in. below pipes (**if subsurface**) 12 in. below pipes (**if elevated**) 6 in. minimum between rows 6 in. above pipes 12 in. horizontally beyond ends of pipes Incorporate System Sand extensions if req'd 6 in. deep in System Sand extensions	Manual, p. 13
	Offset Adapters installed correctly	Hole in the 12 o'clock position	Manual, p. 7
	Raised Connections installed correctly	Extend no less than 2 in. and no more than 4 in. into pipes; angled so that top of Connection is level with top of pipe.	See Training Update 12/09 & Details
	Alignment of Enviro-Septic® pipes is correct	Approximately parallel (to within +/-1 in.) and level (to within +/- ½ in.)	Manual, p. 15
	D-Box installed correctly (if used/required)	On stable base; level; flow equalizers installed and adjusted; unused outlets plugged/mortared; seals watertight; minimum 2 in. drop in elevation from d-box to Enviro-Septic® pipes; tee baffle required in d-box	Manual, p. 16, p. 27
	Septic Tank installed properly	Sized sufficiently in relation to daily design flow; watertight; inlet and outlet baffles in place; all access covers, risers, etc. sealed; connecting PVC from tank to d-box or pipes slopes at least 1%.	Manual, p. 16 Also see Training Update 12/09
	Observation Port installed properly	One observation port req'd. at center edge of each bed, on downslope side if sloped; constructed of PVC, capped, wrapped in geotextile fabric; bottom of PVC at the infiltrative surface.	Manual, p. 11 Revised Sect. E, 3/2007, p. 17

√	INSTALLATION REQUIREMENTS	COMMENTS	REFERENCE
	Perimeter drain properly installed (if needed to lower SHWT)	Must encircle system completely on 4 sides; constructed of perforated minimum 4 in. approved drain pipe w/ geo-textile sleeve when required; located at least 3 ft. below infiltrative surface; minimum 10 ft. from outer edge of System Sand bed(s); aggregate to w/in 6 in. of final grade; installed with a positive slope of at least 0.2 ft. per 100 ft. with no sags in the line. Side-to-side beds require segment drain between beds; instruct system owner not to alter swales & explain importance of ongoing maintenance to ensure outlet is unobstructed.	Manual, Revised Sect. C Also see Training Update 12/09 & Details
	Venting Properly installed (if required)	Venting is REQUIRED for all systems. High vent off the d-box is required for flood dosed systems, 10 ft. differential req'd. between low & high vent inlets. House/roof vent will be "high" vent in gravity systems. Low vent inlet to be min. 3 ft. above final grade. One 4 in. vent req'd. for every 500 ft. of pipe.	Manual, Section I, Venting pp. 37-39.
	No excess hydraulic loading	NO floor drains, roof drains, foundation drains, sump pumps, gutter systems, irrigation systems, etc. discharging in system area.	Manual, p. 14 See Training Update 12/09
	Discharges from water treatment systems, water softeners/purifiers, hot tubs, jetted tubs, etc.	Unless the system's daily design flow was calculated to include discharges from such appliances, seek an alternative means of dispersal.	See Training Update 12/09
	Sufficient cover material installed	Minimum 6 in. compacted loam (topsoil) capable of sustaining vegetative growth; immediately mulch/seed to prevent erosion. NO pavement or other hardscape above system; no trees w/in 10 ft. of system; plant only grass or wildflowers.	Manual, p. 14
	Cover material crowned	Crown from the center to direct surface water flows away from the system; minimum 3% finish grade slope.	See Training Update 12/09
	Surface diversions ("Swales") properly constructed	Located to intercept and divert surface water away from the system; located in undisturbed soil; min. 10 ft. away from bed (if no perimeter drain) or above/upslope of perimeter drain with a minimum positive slope of 0.2 ft. per 100 ft.; instruct system owner not to alter or remove swales.	See Training Update 12/09
	Cover extensions ("side slopes") properly installed	Req'd. if top of System Sand bed is above original grade; slopes 10% or less require 3 ft. extension beyond pipe in all directions before tapering; slopes greater than 10% require 5 ft. cover extension on down-slope side before tapering; tapering to be 3:1 or shallower.	Manual, p. 12, p. 13
	Flood Dosing schedule	Adjust pumps so that pumping frequency is a minimum of design flow ÷ 6 maximum of design flow ÷ 8 per day.	Manual, Section H Flood Dose System Requirements, p. 36.
	System Installation Form	Completed and mailed to Presby Environmental.	Manual p. 4
	Use & Care Instructions	Provide System Owner with Use & Care Instructions and copies of completed worksheets. Inform System Owner of availability of manual @ www.presbyeco.com.	Visit our website

By signing below, I confirm that I have followed the installation guidelines set forth above, I have received a completed Design Worksheet, and I have provided a copy of this completed form to the system owner, the designer and the local health officer:

Installed by: _____ Date(s) of Installation: _____
(Print Name)

Signed:_____ PEI Certification Number: _____

PERIMETER DRAIN NOTES:

1. DRAINS INSTALLED WITH A MINIMUM (0.2 FT. PER 100 FT.) SLOPE TOWARD DRAIN OUTLET.

2. SYSTEM IS NEVER DESIGNED TO ACCOMMODATE ADDITIONAL WATER FROM FOUNDATION OR FLOOR DRAINS, ROOF GUTTERS OR SURFACE WATER. FINISH GRADING SHOULD DIRECT SURFACE WATER AROUND AND AWAY FROM FIELD.

3. SIDE-BY-SIDE CONFIGURATION REQUIRES A SEGMENT DRAIN BETWEEN THE BEDS. BED SEPARATION IS 20' PLUS THE WIDTH OF THE DRAIN.

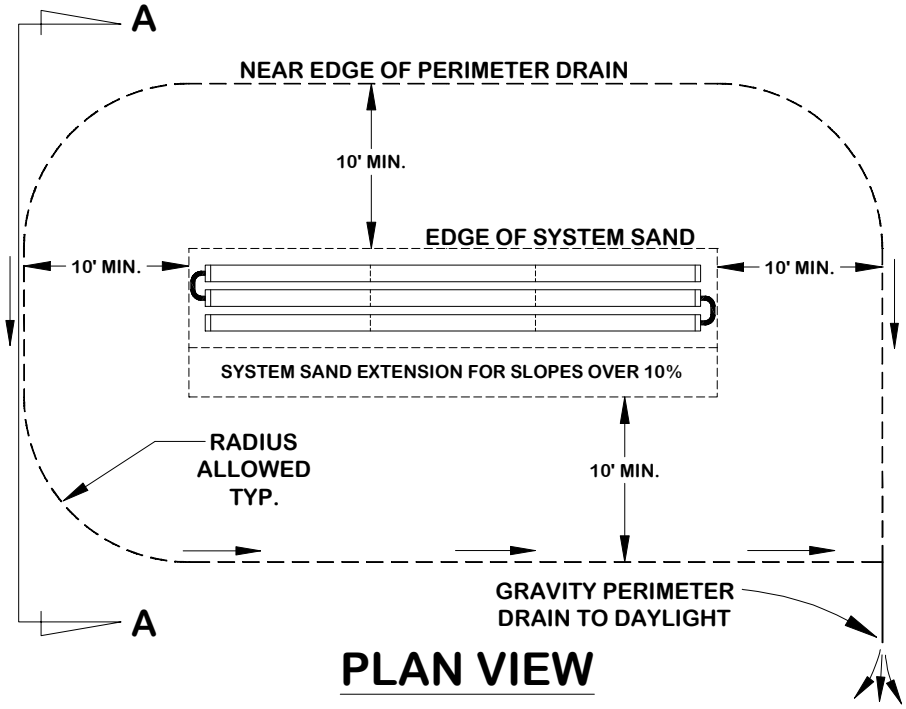

PLAN VIEW

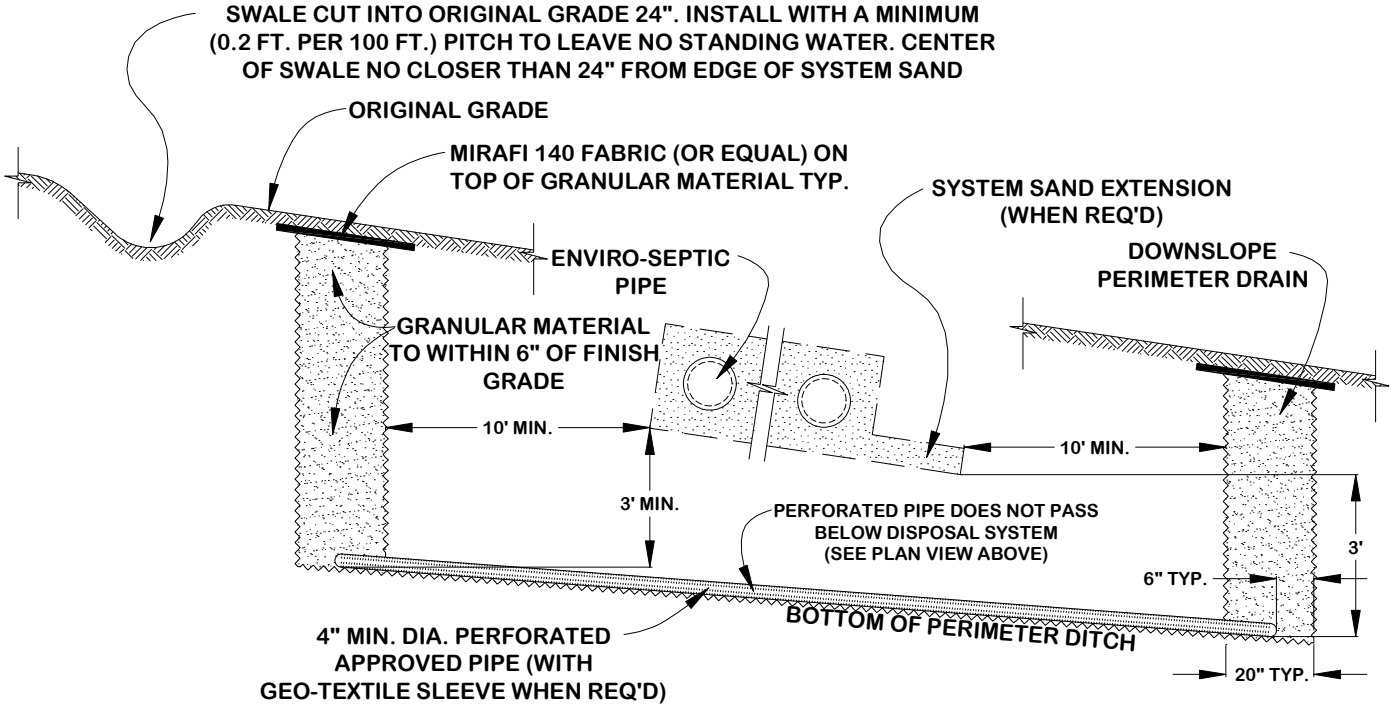

SECTION VIEW A-A

LEVEL OR SLOPING SYSTEMS

CHOOSE CROSS-SECTION THAT APPLIES AND PROVIDE REQUIRED INFORMATION

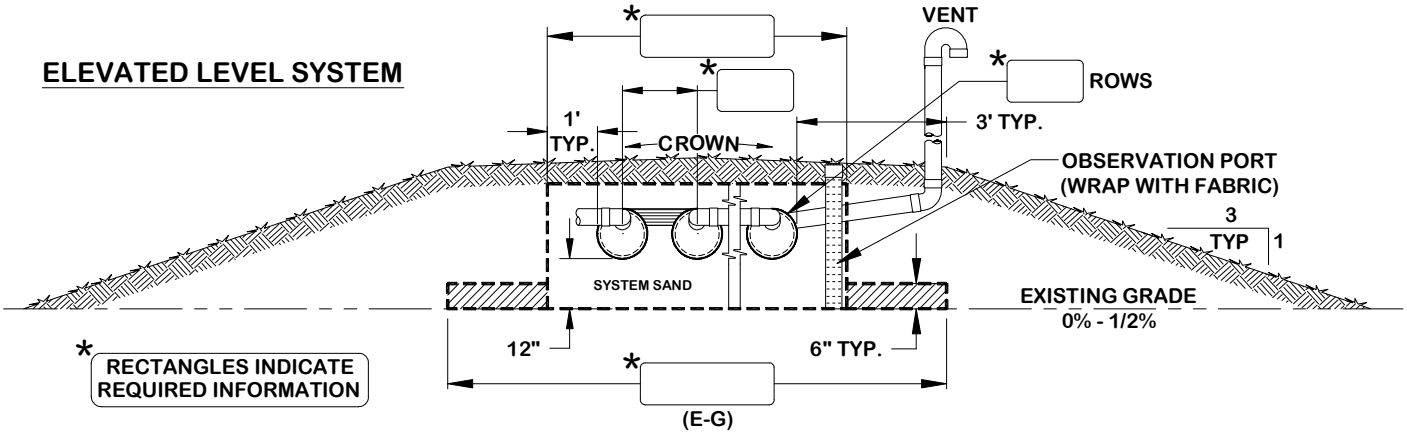

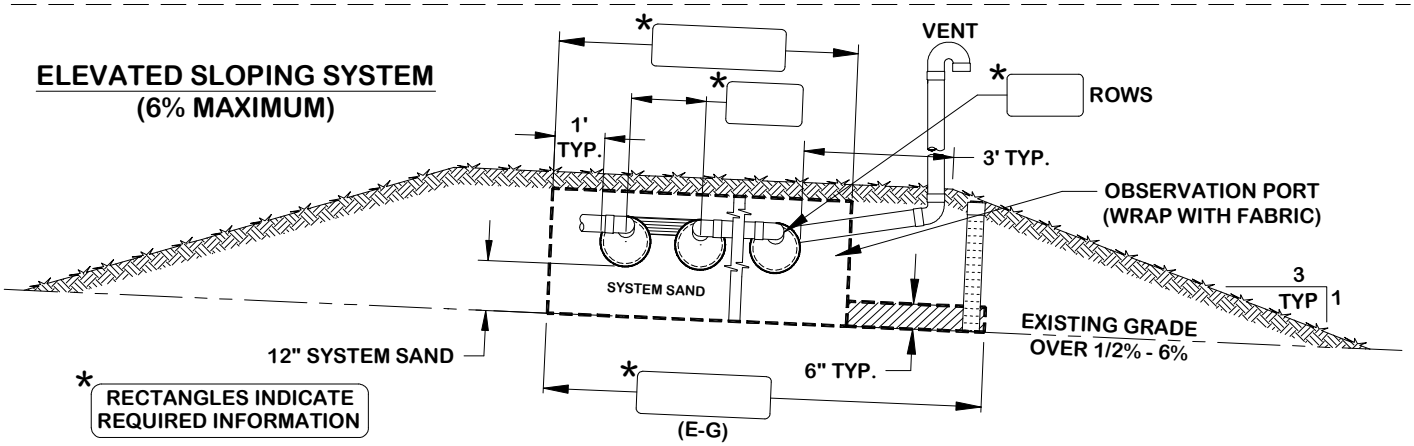

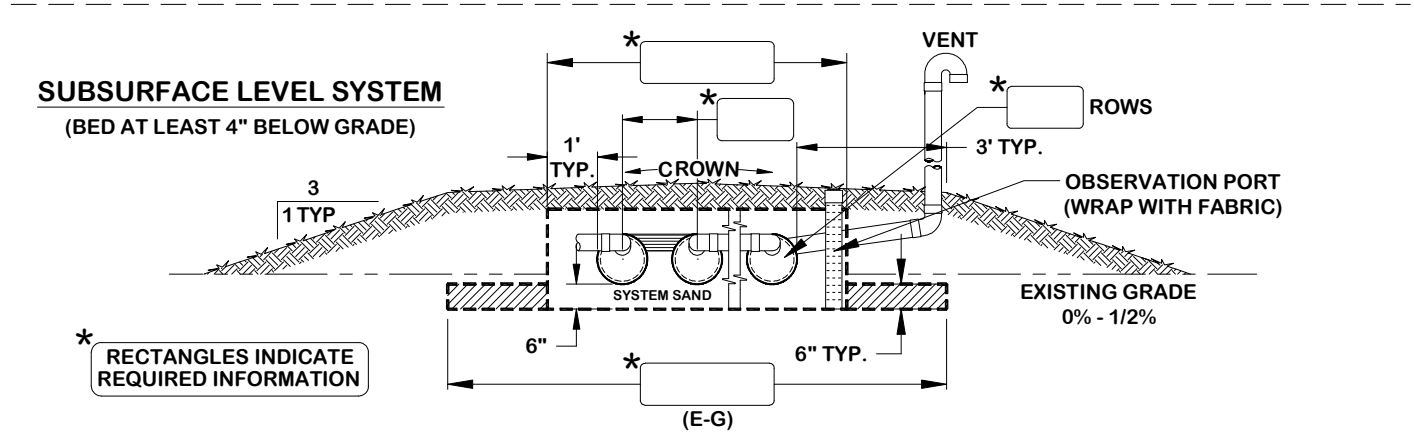

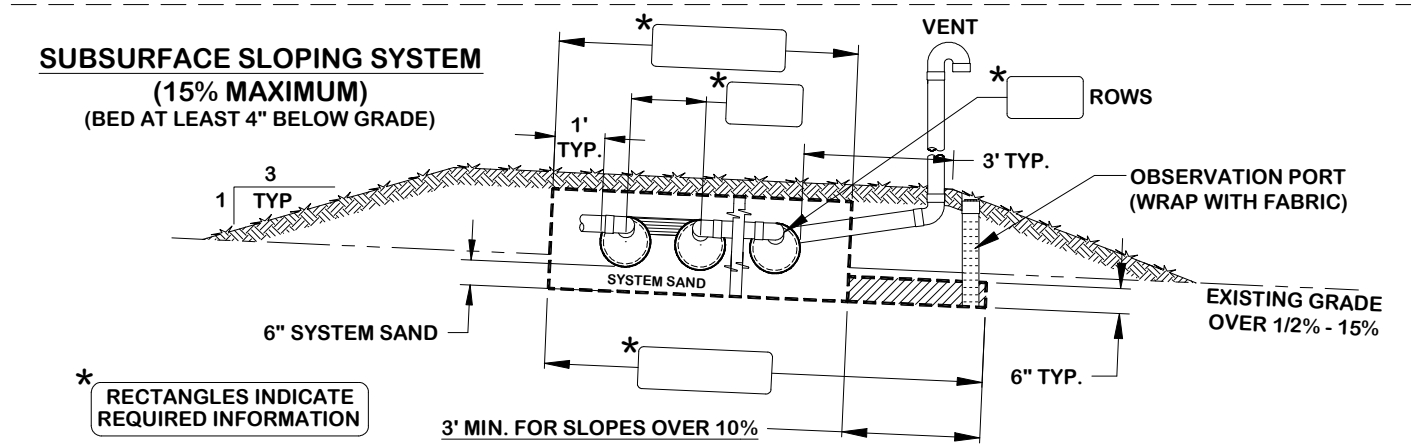

PRESBY ENVIRONMENTAL, INC.

Protecting You and the Environment

143 Airport Rd., Whitefield, NH 03598
Tel: 1-800-473-5298 Fax: (603) 837-9864
www.presbyenvironmental.com info@presbyeco.com

TO: All Indiana Designers & Installers of Enviro-Septic® Systems:
FR: Presby Environmental, Inc. and Environmental Septic Solutions, Inc.
RE: Training Update, Correct Installation of Raised Connections & Tee Baffles
Issued December, 2009

PLEASE NOTE: The details and Installation Notes regarding Raised Connections below were inadvertently omitted from Revised Section E dated March 2007, p. 21 of our manual. Proper installation of the Raised Connections is important to maintaining the proper liquid depth in the pipes and achieving even distribution among the rows. If the Raised Connections are not installed properly, this could also interfere with the flow of oxygen through the system.

Installation Notes for Raised Connections:

1) Insert PVC a minimum of 2 in. and a maximum of 4 in. into the offset adapters. Inserting the PVC more than 4 in. could cut off the flow of air through the system. If the PVC does not extend at least 2 in. into the offset adapter, they may become dislodged during backfilling.

2) Install the Raised Connection so that the top of the 90° elbow is level with the top of the of Enviro-Septic® pipe as shown in the drawings below.

3) Pack sand under and around the raised connection to prevent movement, settling or shifting. Take care during backfilling procedures not to dislodge the Raised Connections.

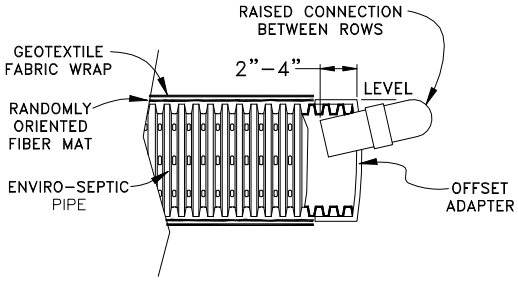

RAISED CONNECTION FLAT BED
(NOT TO SCALE)

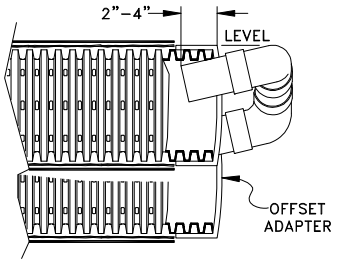

RAISED CONNECTION SLOPING BED

ALL systems are required to have a Tee Baffle in the d-box. See detail below:

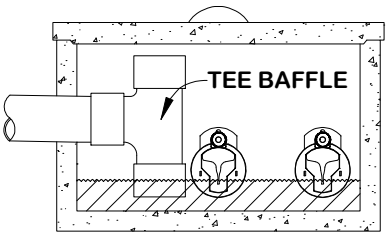

TEE BAFFLE DETAIL

Advanced Enviro-Septic™ and Enviro-Septic®
Wastewater Treatment System
Indiana Design and Installation Manual

Preview

Background

Liquid that exits from a septic tank (effluent) contains suspended solids that can cause traditional systems to fail prematurely. Solids can overload bacteria, cut off air required for aerobic bacterial activity, and/or seal the underlying soil.

What our system does

By utilizing simple, yet effective natural processes the Enviro-Septic® wastewater treatment system treats septic tank effluent in a manner that prevents suspended solids from sealing the underlying soil, increases system aeration, and provides a greater bacterial area (biomat) than traditional systems.

Why our system excels

The Enviro-Septic® wastewater treatment system retains solids in its pipe and provides multiple bacterial surfaces to treat effluent prior to its contact with the underlying soil. The continual cycling of effluent (the rising and falling of liquid inside the pipe) enhances bacterial growth. No other design offers this type of functionality. Our systems excel because they are more efficient, last longer, and have a minimal environmental impact.

System advantages

An Enviro-Septic® wastewater treatment system:

- costs less than traditional systems.
- eliminates the need for washed stone.
- often requires a smaller area.
- installs more easily and quickly than traditional systems.
- adapts easily to residential sites.
- adapts well to difficult sites.
- uses a protected receiving surface protecting the underlying soil.
- blends “septic mounds” into sloping terrain.
- increases system performance and longevity.
- tests environmentally safer than traditional systems.
- recharges groundwater more safely than traditional systems.

The unique Enviro-Septic® pipe components

The Enviro-Septic® pipe is a wastewater treatment system consisting of three components:

1. A corrugated, perforated, high-density plastic pipe with a unique series of ridges on the peak of each corrugation and plastic “skimmers” extending into the pipe’s interior.
2. A thick mat of randomly oriented plastic fibers surrounding the pipe.
3. A special non-woven geo-textile plastic fabric around the mat of fibers.

Continued

Cross-sectional Diagram of Enviro-Septic® pipe.

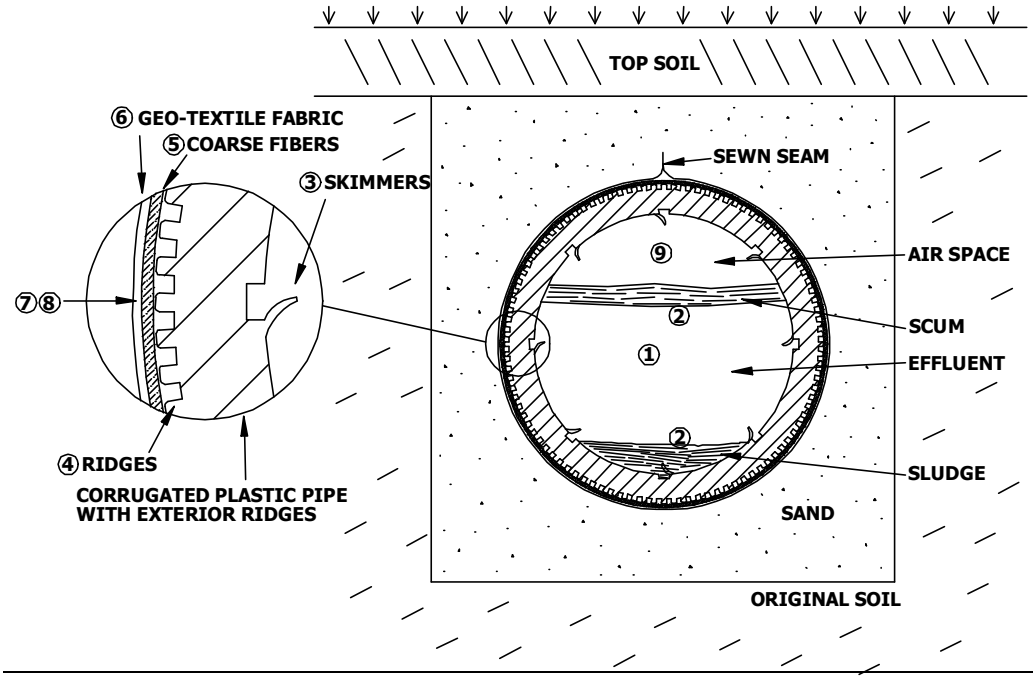

How it works:

Stage	What Happens
1	Warm effluent enters the pipe and is cooled to ground temperature.
2	Suspended solids separate from the cooled liquid effluent.
3	Skimmers further capture grease and suspended solids from the effluent as it exits through perforations in the pipe.
4	Pipe ridges allow the effluent to flow uninterrupted around the circumference of the pipe and aid in cooling.
5	A mat of random, coarse fibers further separates suspended solids from the effluent.
6	Effluent passes into the geo-textile fabric and grows a protected bacterial surface.
7	Sand wicks the treated effluent from the geo-textile fabric and enables air to transfer to the bacterial surface.
8	Fabric and fibers provide a large bacterial surface to break down solids.
9	An ample air supply and fluctuating effluent levels increase bacterial efficiency.

ADVANCED ENVIRO-SEPTIC™ WASTEWATER TREATMENT SYSTEM

TEN STEPS OF WASTEWATER TREATMENT: ADVANCED ENVIRO-SEPTIC™ TREATS EFFLUENT MORE EFFICIENTLY TO PROVIDE LONGER SYSTEM LIFE AND TO PROTECT THE ENVIRONMENT.

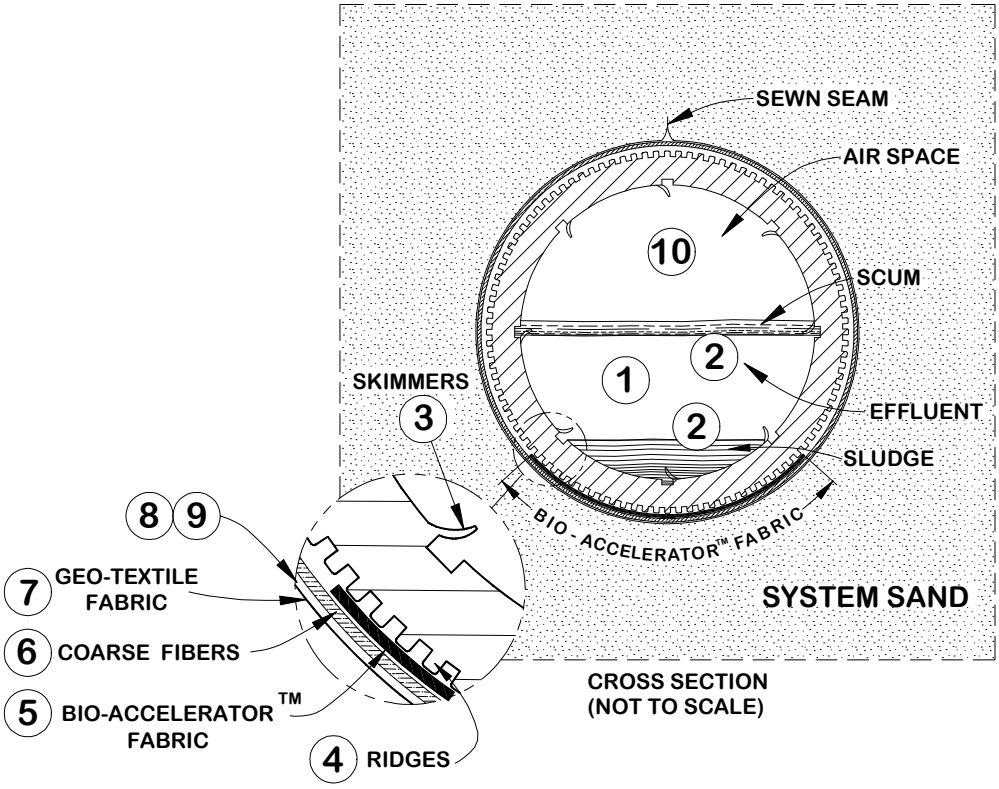

STAGE 1: WARM EFFLUENT ENTERS THE PIPE AND IS COOLED TO GROUND TEMPERATURE.
STAGE 2: SUSPENDED SOLIDS SEPARATE FROM THE COOLED LIQUID EFFLUENT.
STAGE 3: SKIMMERS FURTHER CAPTURE GREASE AND SUSPENDED SOLIDS FROM THE EXITING EFFLUENT.
STAGE 4: PIPE RIDGES ALLOW THE EFFLUENT TO FLOW UNINTERRUPTED AROUND THE CIRCUMFERENCE OF THE PIPE AND AID IN COOLING.
STAGE 5: BIO-ACCELERATOR™ FABRIC SCREENS ADDITIONAL SOLIDS FROM THE EFFLUENT AND DEVELOPS A BIOMAT WHICH PROVIDES TREATMENT AND ENSURES ACCELERATED BIOMAT DEVELOPMENT.
STAGE 6: A MAT OF COARSE RANDOM FIBERS SEPARATES MORE SUSPENDED SOLIDS FROM THE EFFLUENT.
STAGE 7: EFFLUENT PASSES INTO THE GEO-TEXTILE FABRICS AND GROWS A PROTECTED BACTERIAL SURFACE.
STAGE 8: SAND WICKS LIQUID FROM THE GEO-TEXTILE FABRICS AND ENABLES AIR TO TRANSFER TO THE BACTERIAL SURFACE.
STAGE 9: THE FABRICS AND FIBERS PROVIDE A LARGE BACTERIAL SURFACE TO BREAK DOWN SOLIDS.
STAGE 10: AN AMPLE AIR SUPPLY AND FLUCTUATING LIQUID LEVELS INCREASE BACTERIAL EFFICIENCY.

Section A
Introduction

Purpose	The purpose of this manual is to provide guidance in the design and installation of wastewater treatment systems using the Presby Environmental, Inc., group of products.
Presby Environmental, Inc., standards	All systems using Presby Environmental, Inc., products must be designed and installed in compliance with the procedures and specifications described in this manual.
State standards	410 IAC 6-8.1, Residential Sewage Disposal Systems and *Protocols for Experimental Technologies* must be complied with for all onsite sewage disposal requirements not described in this manual.
Certification required	Presby Environmental, Inc., requires all designers and installers of its products to be certified. Certification is obtained by attending the "Enviro-Septic® Designer and Installer Certification Course" presented by Presby Environmental, Inc., or its sanctioned representatives. All individuals involved in the review, approval, and permitting process must also attend a certification training session before they may review, approve, and permit an onsite system containing an Enviro-Septic® wastewater treatment system.
"System Installation Form" required	Installers of Enviro-Septic® systems must provide Presby Environmental, Inc., with a copy of a completed "System Installation Form" for each new or replacement system installed. <u>Reference</u>: See "Appendix A – System Installation Form."
Technical support	Presby Environmental, Inc., provides technical support to all individuals using our products. For questions about our products or the information contained in this manual, please contact us at 1-800-473-5298.

Section B
Definitions of Terms

Introduction

As you read through the information in this manual, you will encounter common terms, terms that are common to our industry, and terms that are unique to Enviro-Septic® systems. While alternative definitions may exist, this section defines these terms as they are used in this manual.

List of terms

Here's a list of the terms defined in this section.

- Basic serial distribution
- Center-to-center spacing
- Combination serial distribution
- Contour
- Coupling
- D-Box
- Design daily flow
- Differential venting
- Distribution box
- Elevated bed system
- End cap
- Enviro-Septic® pipe
- Enviro-Septic® system
- Fill
- Flow equalizer
- GPD
- High and low vents
- High strength waste
- IN DOT Specification 23 sand
- Infiltrative surface
- Line
- Multiple bed distribution
- Offset adapter
- Raised straight connection
- Raised U-shaped connection
- Section
- Serial distribution
- SHWT
- Side-slope
- Site slope
- Slope
- Smearing
- Soil
- Soil material
- Soil profile

Continued

Definitions of Terms, Continued

List of terms (continued)	• Structure • Subsurface bed system • Subsurface onsite system drain • Surface diversion • System bed • System sand
Basic serial distribution	Basic serial distribution incorporates lines in serial distribution in a single bed.
Center-to-center spacing	Center-to-center spacing is the horizontal distance from the center of one line to the center of the adjacent line.
Combination serial distribution	Combination serial distribution incorporates two or more sections in a single bed, each section receiving effluent from a distribution box.
Contour	Contour is a line connecting points of equal elevation on the surface of the earth.
Coupling	A coupling is a fitting that joins two pieces of Enviro-Septic® pipe.
D-Box	D-Box is an abbreviation for distribution box.
Design daily flow	Design daily flow is the assigned peak daily flow of sewage in gallons per day from a residence.
Differential venting	Differential venting is a method of venting an Enviro-Septic® system utilizing high and low vents.
Distribution box	A distribution box is a device designed to equally distribute effluent by gravity from an inlet pipe to outlet pipes.
Elevated bed system	An elevated bed system is a soil absorption field with the infiltrative surface (system bed/soil interface) at original grade.
End cap	An end cap is a solid cap used to seal the end of an Enviro-Septic® line or section.
Enviro-Septic® pipe	An Enviro-Septic® pipe is a single unit of pipe, 10’ in length with an outside diameter of 12” and a storage capacity of approximately 58 gallons.

Continued

Definitions of Terms, Continued

Enviro-Septic® system	An Enviro-Septic® system is an onsite system with Enviro-Septic® pipe in a subsurface or elevated bed that receives sewage effluent through basic serial distribution, combination serial distribution, or multiple bed distribution.
Fill	Fill is characterized by one or more of the following: 1) No soil horizons. 2) Depositional stratification created by the movement of soil by man. 3) A soil horizon that has been covered by man. 4) Materials not indigenous to a soil horizon, such as cinders, refuse, or construction materials.
Flow equalizer	A flow equalizer is an adjustable plastic insert installed in the outlet pipes of a distribution box to equalize effluent distribution to each outlet.
GPD	GPD is an abbreviation for gallons per day.
High and low vents	High and low vents are pipes used in differential venting.
High strength waste	High strength waste is septic tank effluent quality in excess of two-hundred and fifty (250) mg/L for carbonaceous biochemical oxygen demand ($CBOD_5$) or total suspended solids (TSS).
IN DOT Specification 23 sand	IN DOT Specification 23 sand is Indiana Department of Transportation Specification 23 sand.
Infiltrative surface	Infiltrative surface is the surface used for the absorption of effluent by soil. For *subsurface bed systems*, bed sidewalls are not included in the calculation of the total infiltrative surface area required for the soil absorption field. For *elevated bed systems*, the infiltrative surface is original grade.
Line	A line is a number of Enviro-Septic® pipes connected by couplings with an offset adapter on the inlet end and an offset adapter or end cap on the opposite end.
Multiple bed distribution	Multiple bed distribution incorporates two or more beds, each bed with basic serial or combination serial distribution and receiving effluent from a distribution box.
Offset adapter	An offset adapter is an end cap fitted with a 4” offset hole installed at the 12 o’clock position.

Continued

Definitions of Terms, Continued

Raised straight connection	A raised straight connection is a PVC pipe arrangement used to connect lines oriented along the contour of the site to maintain the correct liquid level inside each line.
Raised U-shaped connection	A raised U-shaped connection is a PVC pipe arrangement used to connect lines oriented along the slope of the site to maintain the correct liquid level inside each line.
Section	A section is a group of lines in serial distribution receiving effluent from a distribution box.
Serial distribution	Serial distribution is two or more Enviro-Septic® lines connected with a raised connection.
SHWT	SHWT is an abbreviation for seasonal high water table.
Side-slope	Side-slope, expressed as a ratio, is the difference in horizontal distance and the difference in elevation between two points on the surface of a landform and commonly stated as run to rise. Example: A side-slope with a grade of three to one (3:1) is the difference in horizontal distance of three (3) feet (run) over an elevation difference of one (1) foot (rise).
Site slope	Site slope is the slope of the soil absorption field site as indicated on a written site evaluation report by a soil scientist or as measured using survey equipment.
Slope	Slope, expressed as a percent, is the difference in elevation divided by the difference in horizontal distance between two points on the surface of a landform. Example: A slope of one (1) percent is the difference in elevation of one (1) foot (rise) over a horizontal distance of one hundred (100) feet (run).
Smearing	Smearing is the mechanical sealing of soil air spaces along an excavated, tilled or compressed surface.
Soil	Soil is natural, non-filled mineral or organic matter on the surface of the earth that shows the effects of genetic and environmental factors. These factors include climate (water and temperature effects), microorganisms, macro-organisms, and topography acting on a parent material over time.

Continued

Definitions of Terms, Continued

Soil material	Soil material is any soil displaced from its original position within a soil profile.
Soil profile	Soil profile is a vertical section of the soil through all its horizons and extending into the underlying parent material.
Structure	Structure is anything that alters the natural flow of surface or subsurface water. Structures include, but are not limited to, residences, commercial facilities, foundations, slabs, garages, patios, barns, above and below ground swimming pools, retaining walls, roads, driveways, and parking areas.
Subsurface bed system	A subsurface bed system is a soil absorption field with the infiltrative surface (system bed/soil interface) a minimum of 4" below original grade. Reference: See "System bed dimensions," p. 13.
Subsurface onsite system drain	A subsurface onsite system drain is a subsurface drainage system that is used to control the seasonal high water table of the soil in an onsite system soil absorption field. Onsite system subsurface drains include perimeter drains, interceptor drains, segment drains, and main drains up to the point of entry into a subsurface drain or to the point of surface discharge.
Surface diversion	A surface diversion is a natural or manmade barrier that changes the course of overland flow of water around an onsite system soil absorption field.
System bed	The system bed is the minimum system sand area required in subsurface bed and elevated bed Enviro-Septic® systems.
System sand	System sand is the sand used in an Enviro-Septic® system.

Section C
Specifications, Requirements, and Restrictions

Introduction

This section contains a variety of subjects and the specifications, requirements, and restrictions relating to each.

Subjects covered

This table contains the subjects covered and the page location of each.

Subject	Page
Bed design restrictions – soil classes E-G	10
Converging flows restriction	11
Design daily flow specification	11
Flood dose requirements	11
Line requirement	11
Loading limits specification	11
Non-conventional system configuration restriction	11
Observation port requirement	11
Site requirements	11
Soil class A design restriction	12
Soil class E-G design restriction	12
Soil material cover extensions requirements	12
Soil moisture construction restrictions	12
Subsurface drain requirements	12
Subsurface drainage system requirements	12
Surface diversions requirements	12
System bed dimension specifications	13
System sand specification	13
System side slopes and soil material cover requirements	13
System site restriction	14
Topographic position requirement	14
Tree stump removal requirement	14
Venting requirements	14

Bed design restrictions – soil classes E-G

Beds in soil classes E-G must be designed with basic serial distribution. Most systems will require multiple beds. All beds in a multiple bed system must use the same bed configuration.

Beds must be separated by at least six feet of naturally occurring undisturbed soil. To accommodate construction access, additional separation distance may be necessary.

Continued

Specifications, Requirements, and Restrictions, Continued

Converging flows restriction	Enviro-Septic® systems must not be located where surface or subsurface waters will converge downslope causing water flow to become concentrated or restricted within the soil absorption field or dispersal area.
Design daily flow specification	Design daily flow is 150 GPD times the number of bedrooms and bedroom equivalents.
Flood dose requirements	Systems using flood dose distribution must use differential venting and velocity reduction. Reference: See "Section H - Flood Dose System Requirements," p. 36.
Line requirement	All beds must have at least 2 lines.
Loading limit specification	Each Enviro-Septic® system bed with basic serial distribution, or each section with combination serial distribution, may receive no more than 600 GPD of effluent. Enviro-Septic® systems receiving more than 600 GPD in soil classes A-D may be designed with combination serial or multiple bed distribution. Enviro-Septic® systems in soil classes E-G must be designed with basic serial distribution or as many beds with multiple bed distribution as needed. No bed can accept more than 600 GPD.
Non-conventional system configuration restriction	Non-conventional system configurations as described in "Section G" of this manual may not be used for systems in soil classes E-G.
Observation port requirement	One capped observation port of 4 inch PVC pipe must be installed at the center edge of each sand bed with the bottom of the pipe located at the infiltrative surface and on the downslope side of each sand bed. Note: This is a State requirement for observation of system performance.
Site requirements	All sites must meet the site requirements contained in 410 IAC 6-8.1, Residential Sewage Disposal Systems.

Continued

Specifications, Requirements, and Restrictions, Continued

Soil class A design restriction	All Enviro-Septic® system designs for class A soils must be reviewed and approved by the Indiana State Department of Health prior to permit issuance by the local health department.
Soil class E-G design restriction	When the soil class is in the E-G range, system designs are restricted in configuration and slope. Reference: See "Quick Reference Guide for Soil Classes E-G," p. 49.
Soil material cover extensions requirements	All Enviro-Septic® systems with the top of the system sand bed above original grade require soil material cover extensions (i.e., any system with the infiltrative surface less than 24" below original grade). All Enviro-Septic® system soil material cover extensions must be installed at the same slope as the site. Systems that slope 10% or less require 3-foot soil material cover extensions on each side beyond the outside edge of all Enviro-Septic® pipe before tapering. Systems that slope greater than 10% require 3-foot soil material cover extensions on three sides and a 5-foot soil material cover extension on the down slope side beyond the outside edge of all Enviro-Septic® pipe before tapering.
Soil moisture construction restrictions	Construction restrictions based on soil moisture are addressed in 410 IAC 6-8.1-52(n) and 56(f) Residential Sewage Disposal Systems. Reference: See also "Section E - Installation, Handling, and Storage Requirements," p. 17.

NOTE: Revised Subsurface Drain Requirements (below), March 2007

Subsurface drain requirements	Subsurface drains must comply with the requirements contained in the *Best Practices, Plan Submittal, Onsite Drainage Systems*.
Subsurface drainage system requirements	Subsurface drains are required when the site evaluation report describes a seasonal high water table within the depth of soil required for the onsite system. Subsurface drains must be 10 feet or more from the system sand and, those portions parallel to the long axis of the soil absorption field, no more than 65 feet apart, unless drainage calculations demonstrate a wider distance may be used.
Surface diversions	Surface diversions must comply with the requirements contained in the *Best Practices for Plan Submittal, Onsite Drainage Systems*.

System bed dimension specifications

The height of a *subsurface bed system*, excluding the soil material cover, is 24": 6" of system sand below the Enviro-Septic® pipe; the Enviro-Septic® pipe (12"); and 6" of system sand above the Enviro-Septic® pipe (see diagrams on pp. 29-31).

The height of an *elevated bed system*, excluding the soil material cover, is 30": 12" of system sand below the Enviro-Septic® pipe; the Enviro-Septic® pipe (12"); and 6" of system sand above the Enviro-Septic® pipe (see diagrams on p. 32).

For all Enviro-Septic® systems, the system sand extends 12" beyond the outside edge of all Enviro-Septic® pipe (See diagrams, pp. 29-32).

For *subsurface bed systems* in Soil Classes A-D on sites sloping greater than 10% and up to 15%, the system sand extends an additional 3' at a minimum depth of 6" on the downslope side (See diagram, p. 31).

Caution: Limiting the system bed dimensions during installation to the approved design may be essential to maintain separation distances as required in 410 IAC 6-8.1. Limit the boundary of system sand as it is installed by using soil material to contain the angle of repose of the system sand and prevent the system bed from exceeding design dimensions.

System sand specifications

Enviro-Septic® system sand must be ASTM Standard C-33 – 03, Section 6.1 for fine aggregate or IN DOT Specification 23 sand.

System side slopes and soil material extensions requirements

Side slope tapering is to be 3:1 or shallower.

Soil material extensions, with a texture similar to the soil at the site and capable of sustaining plant growth, must be installed when the top of the system bed is above original grade.

Continued

Specifications, Requirements, and Restrictions, Continued

System site restriction	The State of Indiana does not allow system sites beneath pavement, driveways, parking lots, or other hard surface areas.
Topographic position requirement	The topographic position of the site must be convex, hill slope, or flat. No onsite system may be located on concave slopes that concentrate surface flows.
Tree stump removal requirement	Tree stumps within the limits of the sand bed must be removed as described under "Tree stump removal," p. 20.
Venting requirements	All Enviro-Septic® system beds with over 12" of soil material cover must be vented. Flood dose systems require differential venting. Reference: See "Section I – Venting Requirements," p. 37.

Section D
Design Criteria

Introduction

This section discusses general design criteria.

Line orientation

Enviro-Septic® lines must be laid level and parallel to the contour of the site (perpendicular to the slope of the site).

Longer Enviro-Septic® systems recommended

All Enviro-Septic® systems are recommended to be designed and installed as long and narrow as possible for the site.

Maximum line lengths

To maintain efficient effluent cycling within Enviro-Septic® pipe, the maximum line length is 100'. Lines may be connected using offset adaptors to obtain basic serial or combination serial distribution.

Minimum line lengths: soil classes A-D

Soil classes dictate minimum line lengths. Use this table for soil classes A through D.

IF the soil class is…	THEN the minimum line length is…
A or B	30 feet.
C	40 feet.
D	50 feet.

Reference: See "Section G - Non-Conventional System Configurations," p. 33.

Minimum line lengths: soil classes E-G

Minimum line lengths for soil classes E-G are determined using Table D, p. 50.

Required depth

The required depth to meet vertical separation distances is measured from the infiltrative surface (system bed/soil interface).

References: See "Subsurface bed systems" and "Elevated bed systems," p. 43.

Horizontal separation distances

Minimum separation distances must comply with 410 IAC 6-8.1-36 and 37, as measured from the outside edge of the system bed.

Continued

Design Criteria, Continued

Ten foot increments work best	It is easier if line lengths are designed in exact 10' increments since Enviro-Septic® pipe is 10' in length. However, if necessary, the pipe is easily cut to meet site constraints.
Line elevations	For sloping sites, elevations must be provided on the design for each line of the bed system. Reference: See "Slope Design Chart, p. 64.
Septic tank and D-Box elevations	The outlet of a septic tank or D-Box must be set at least 2" above the highest inlet of the Enviro-Septic® line with the connecting pipe slope not less than 1%.
Owner information on system use and maintenance	Designers must add notes to their designs or provide the owner with a copy of an operating manual regarding system use and maintenance. Reference: See "Appendix B – Wastewater Treatment System Operating Manual."

Revised Section E
Installation, Handling, and Storage Requirements
March 2007

Introduction

This section contains requirements for installing, handling, and storing Enviro-Septic® products.

System components

Here's a picture of the Enviro-Septic® components.

Contamination Note: Keep mud, grease, oil, etc., from all system components. Do not drag pipe through wet or muddy areas.

Storage

The outer fabric of the Enviro-Septic® pipe is ultra-violet stabilized. However, the protection breaks down after a period of time in direct sunlight. To prevent damage to the fabric, cover the pipe with an opaque tarp.

Store pipe on high and dry areas to prevent surface water and soil from entering the pipes or contaminating the fabric prior to installation.

Soil compaction

Minimize machine movement to avoid soil compaction and destruction of the soil structure under and around the system. Be especially careful not to compact soil on the down slope side of the system (dispersal area).

Reference: See 410 IAC 6-8.1-52(o), Residential Sewage Disposal Systems.

Observation ports

Install one capped observation port of 4" PVC pipe at the center edge of each sand bed with the bottom of the pipe located at the infiltrative surface (system bed/soil interface). On sloping sites, the observation port must be located on the downslope side of each sand bed.

Continued

Site preparation

<u>Critical reminder</u>: It is critical to keep excavators, backhoes, and other site preparation equipment off the excavated or tilled surface of a bed. Before installing the system sand, excavation equipment should be operated around the bed perimeter and not on the bed itself. During all stages of installation, avoid compacting soil on either side of the bed on sites with slopes ½% or less and the downslope side of the bed on sites with slopes greater than ½%.

Site preparation must comply with the requirements in *410 IAC 6-8.1, Residential Sewage Disposal Systems*, the *Best Practices, Plan Submittal*, and the following:

- Locate and stake out the system sand bed and extension areas, soil material cover extensions, and dispersal area (if required) on the site according to the approved plan.

  <u>References</u>: See "System bed dimension specifications," p. 13, "Soil material cover extensions requirements," p. 12, and "Dispersal area," p. 43.

- Do not travel across or locate excavation equipment within the portion of the site receiving system sand, except for tilling operations for elevated bed systems.

- Do not stockpile materials or equipment within the portion of the site receiving system sand and the dispersal area.

- Do not smear or compact soils while preparing the site.

  <u>Reference</u>: See 410 IAC 6-8.1-52(n), 52(o), and 56(f) Residential Sewage Disposal Systems.

- Remove stumps and organic matter from the portion of the site receiving system sand, as described in the next section "Tree stump removal."

  <u>Notes</u>: Always attempt to locate the Enviro-Septic® system on the site such that no tree stumps greater than 3" in diameter are located in the system bed or dispersal areas.

  No tree stump removal is allowed along the downslope edge of the system bed.

  For *elevated bed systems*, do not locate the downslope edge of the system bed directly above tree stumps 3" in diameter or less.

  <u>Reference</u>: See "Tree stump removal," p. 20 in this revision.

- Cut and remove excessive vegetation at the bed site.

  <u>Note</u>: It is not necessary for the soil of the sand bed area to be smooth when the site is prepared.

Continued

Site preparation Subsurface beds

- For **subsurface bed systems**, excavate the system bed to a depth of at least 4” below original grade. Using an excavator or backhoe, tilt the bucket teeth perpendicular to the bed and use the teeth to rake furrows 2”- 6” deep into the bottom of the entire bed area.
  - Do not work wet or frozen soils.
  - Add 6” of system sand to the excavated site and install and secure an observation port.
  - Add the system sand on the same day that the system is excavated and before any precipitation.
  - If the d-box is installed on system sand, the system sand beneath the d-box must be compacted to provide a stable base.

  Reference: See diagrams on pp. 6-8 of the “Revised Quick Reference Guide for Soil Classes E-G Elevated and Subsurface Systems, March 2007” and 410 IAC 6-8.1-52(n), Residential Sewage Disposal Systems.

Site preparation Elevated beds

- For **elevated bed systems**, till the system bed parallel to the contour of the site to a depth of 7” to 14” with a moldboard or chisel plow, bulldozer with a ripper, or backhoe/excavator with chisel teeth (wooded sites only) as indicated in the diagram below.
  - Do not work wet or frozen soils.
  - On sites sloping ½% or less, till an additional 2’ beyond the entire perimeter of the system sand. On sites sloping greater than ½% to 6% till an additional 2’ beyond both ends and the downslope side of the system sand.

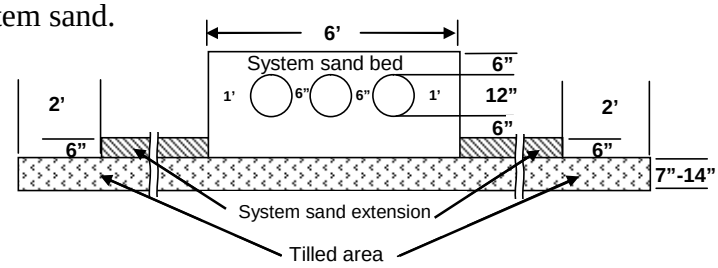

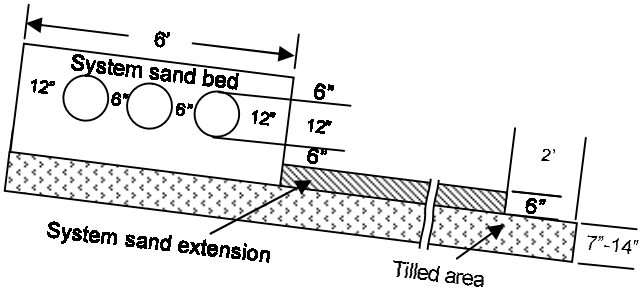

Continued

Site preparation Elevated Beds (continued)

- If a chisel plow or a bulldozer with a ripper is used, make only one pass parallel to the contour of the site.
- If a moldboard plow is used, it must have at least 2 bottoms and make only one pass parallel to the contour of the site. On slopes greater than ½%, turn the furrows upslope.
- If a backhoe/excavator is used to till a wooded site, fit it with chisel teeth, till the site using the chisel teeth, and keep the backhoe on untilled soil at all times.
- After tilling the site, cut off all roots that protrude above the tilled surface (without compaction of the soil material).
- Install and secure the observation port.
- Immediately after tilling, to protect the site from damage by precipitation, place 6" of system sand, measured from original grade, over the tilled area [which includes both the system sand bed and system sand extension(s)]. Add another 6" of system sand to create system sand extension(s) as shown in the diagrams on the preceding page.
- When installing the system sand, work off either end or the uphill side of the system to avoid compacting soil (see "**Critical Reminder**" at the beginning of this section).
- When installing system sand, keep at least 6" of system sand between the vehicle tracks and the tilled soil of the site.
- Add the system sand on the same day that the system is tilled and before any precipitation.
- If the D-Box is installed on system sand, the system sand beneath the D-Box must be compacted to provide a stable base.
- If a plow pan exists not exceeding 12" from the original grade, till the soil to at least 2" below the bottom of the plow pan.

Note: The department or local health department may require field supervision of tilling operations.

References: See diagrams on pp 6-9 of the "Revised Quick Reference Guide for Soil Classes E-G Elevated and Subsurface Systems, March 2007." and 410 IAC 6-8.1-56(f), Residential Sewage Disposal Systems.

Continued

Tree stump removal

- For *subsurface bed systems*, remove all tree stumps and the central root system below grade.
- For *elevated bed systems*, cut tree stumps 3” diameter and smaller, measured at the ground surface, flush with the ground surface. Remove tree stumps larger than 3” diameter, measured at the ground surface, and the central root system below grade.
- Use a backhoe or excavator with a mechanical “thumb” or similar extrication equipment, lifting or leveraging stump in a manner that minimizes soil disturbance.
- Do not locate equipment within the limits of the system sand bed or dispersal area.
- Avoid soil disturbance, relocation, or compaction.
- Avoid mechanical leveling or tamping of dislodged soil.
- Fill all voids with system sand.

Level line tolerances

Use a laser level or transit to install lines level. Variations beyond 1/2” may affect system performance. Variations beyond 1” are not acceptable.

Use raised connections

Raised connections consist of offset adapters, 4” PVC sewer pipe, and 90° elbows. They enable greater liquid storage capacity and increase the bacterial surfaces being developed. Use raised connections to connect lines in serial distribution in an Enviro-Septic® system. Here is a diagram along with some installation notes.

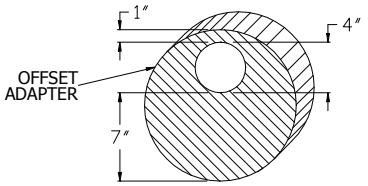

<u>Installation Notes</u>:

1. Insert PVC pipe no more than 2-4” into the offset adapter. Exceeding 2-4” may cause air locking.
2. Install the raised connection so that the top of the 90° elbow is level with the top of the offset adapter (see side view diagram).
3. Pack sand under and around the raised connection to prevent movement.

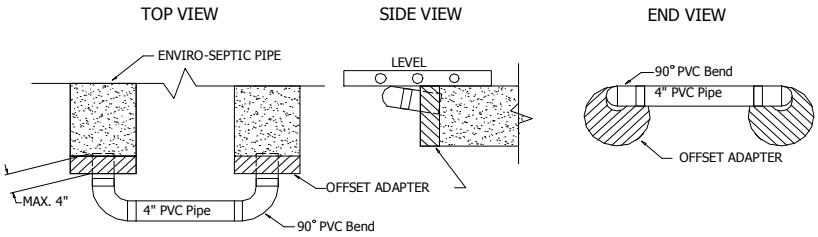

Line spacers

Sand may be used to keep pipe in place while covering, but simple tools may also be constructed for this purpose. Here are two examples. One is made from rebar, the other from wood.

Caution: Remove all tools used as line spacers before final covering.

Welded rebar handle

Bent rebar

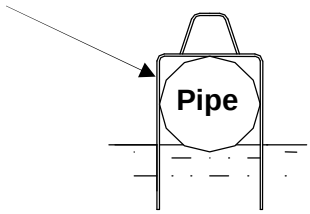

Wooden frame

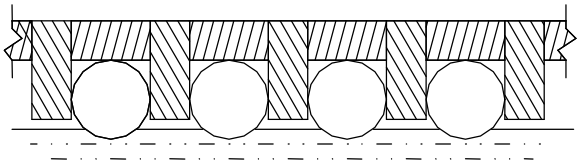

Backfilling lines

Spread system sand between the lines, straddle each line of pipe and walk heel to toe its entire length. This ensures that system sand fills all void spaces beneath the Enviro-Septic® pipe. Finish spreading system sand to the top of the lines for inspection purposes.

Backfilling and final grading

Spread system sand to a minimum of 6” over the pipe and a minimum of 12” beyond the Enviro-Septic® pipe on all four sides.

Spread soil material cover having a texture similar to the soil at the site, without causing compaction, so that the upper 6” will sustain plant growth and the final grade sheds water away from the Enviro-Septic® system.

Note: A tracked vehicle may be used to spread the system sand and soil material cover as long as at least 12” of cover is maintained over the pipe.

References: See diagrams on pp 6-9 of the “Revised Quick Reference Guide for Soil Classes E-G Elevated and Subsurface Systems, March 2007.” and “System sand specifications,” p. 13.

Erosion control

Protect the site from erosion by proper grading, seeding, mulching, and surface diversions to control runoff.

Section F
Effluent Distribution and System Configurations

Preview

Introduction

This section presents the designs in which Enviro-Septic® systems may be installed in Indiana.

Sloping sites

The slope of the bed must be the same as the site slope. Maximum site and system slope is 15% for a *subsurface bed system*, and 6% for an *elevated bed system*. The slope of the site may contain more than one slope provided the maximum allowed slope is not exceeded. The center-to-center pipe spacing may also vary within the same bed.

Line orientation

Enviro-Septic® lines must be laid level and parallel to the contour of the site (perpendicular to the slope of the site).

Reference: See 410 IAC 6-8.1-52(e) and (g), 53(f) and (q), and 56(d).

Velocity reduction

If the slope of piping from the septic tank to the Enviro-Septic® system is 10% or more for lengths of 50'or less, or 5% or more for lengths over 50,' a velocity reducer at the system inlet is required. A distribution box with a baffle or inlet tee is adequate for velocity reduction.

Reference: See 410 IAC 6-8.1-41(c).

In this section

This section contains the following subjects.

Subject	Page
Basic Serial Distribution	24
Combination Serial Distribution	25
Multiple Bed Distribution	27
Subsurface Bed Systems	29
Elevated Bed Systems	32

Basic Serial Distribution

Introduction

Basic serial distribution is preferred for single beds of 600 GPD or less and multiple beds where each bed receives 600 GPD or less. Basic serial distribution is quick to develop a strong biomat in the first line, providing improved effluent treatment. Basic serial distribution provides a longer flow route to allow decomposition of solids and greases, providing improved long term treatment.

Definition

Basic serial distribution incorporates lines in serial distribution in a single bed.

Note: Basic serial distribution is installed in a single bed with a series of Enviro-Septic® lines connected at the ends with raised connections, using offset adapters and PVC sewer and drain pipe. One offset adapter is installed at the single inlet, and one end cap installed at the end of the system.

Basic serial distribution diagram

Here's a plan view of Enviro-Septic® basic serial distribution with 6-12" of soil material cover. More than 12" of soil material cover requires the end cap to be replaced with an offset adapter and venting.

Reference: See "System bed dimensions," p. 13, and "Section I – Venting Requirements," p. 37.

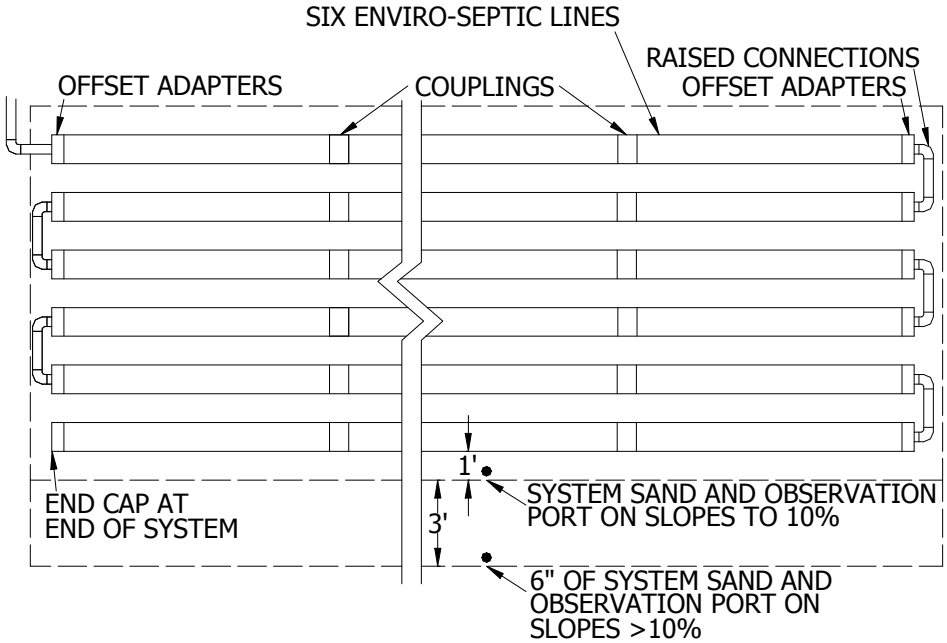

Use restriction

Lines may vary in length to accommodate site constraints only in soil classes A-D.

Combination Serial Distribution

Introduction

Combination serial distribution is required for systems with greater than 600 GPD. Combination serial distribution is quick to develop a strong biomat in the first line of each section providing improved effluent treatment. Combination serial distribution uses multiple sections to provide longer flow routes to allow decomposition of solids and greases, providing improved long term treatment.

Definition

Combination serial distribution incorporates two or more sections in a single bed, each section receiving effluent from a distribution box.

Note: Combination serial distribution is installed in a bed of two or more sections. Each section of combination distribution is a series of Enviro-Septic® lines connected at the ends with raised connections, using offset adapters and PVC sewer and drain pipe. An offset adapter is installed at each section inlet and an end cap at the end of each section. If venting is required, an offset adapter replaces the end cap.

Reference: See "Venting requirements," p. 14.

Use restriction

Use of combination serial distribution is restricted to Soil Classes A-D.

Flow equalizers required

All distribution boxes used to divide effluent flow require flow equalizers in their outlets. Flow equalizers are limited to a maximum of 10 gallons/minute in gravity systems and 20 gallons/minute in flood dosed systems.

Note: To prevent movement, be sure distribution boxes are placed on undisturbed soil, sand or pea gravel base, or concrete pad.

Loading

Each section has a maximum flow of 600 GPD.

Section length requirement

Each section must have the same minimum linear feet of pipe. The minimum linear feet of pipe per section is determined by dividing the total linear feet required in the Enviro-Septic® system by the number of sections. A section may exceed the minimum linear length. Lines within a section may vary in length to accommodate site constraints.

References: See "Minimum line lengths: soil classes A-D," p. 15 and "Ten foot increments work best," p. 16.

Continued

Combination serial distribution diagram

Here's a plan view of two sections in a single bed, each section receiving effluent from a D-Box, with 6-12" of soil material cover. More than 12" of soil material cover requires the end caps to be replaced with offset adapters and venting.

Reference: See "System bed dimensions," p. 13, and "Section I – Venting Requirements," p. 37.

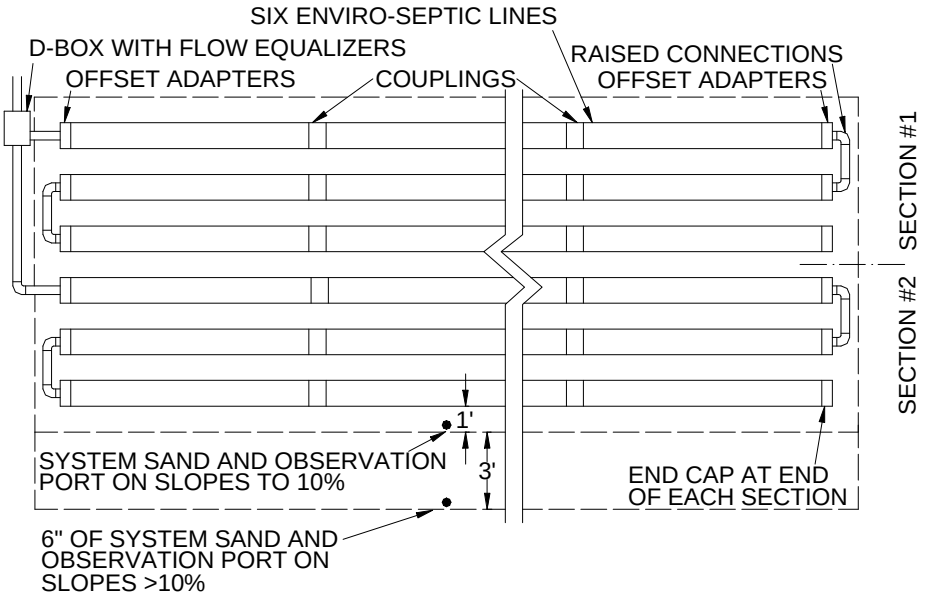

Multiple Bed Distribution

Introduction	Multiple bed distribution may be used to accommodate site configuration constraints in Soil Classes A-D and is required for systems in Soil Classes E-G when the total bed length is greater than 102'.
Definition	Multiple bed distribution incorporates two or more beds, each bed with basic serial or combination serial distribution and receiving effluent from a distribution box.
Flow equalizers required	All distribution boxes used to divide effluent flow require flow equalizers in their outlets. Flow equalizers are limited to a maximum of 10 gallons/minute in gravity systems and 20 gallons/minute in flood dosed systems. Note: To prevent movement, be sure distribution boxes are placed on undisturbed soil, sand or pea gravel base, or concrete pad.
Loading	Each bed has a maximum flow of 600 GPD.
Bed length requirement	Each bed must have the same minimum linear feet of pipe. The minimum linear feet of pipe per bed is determined by dividing the total linear feet required in the Enviro-Septic® system by the number of beds. A bed may exceed the minimum linear length. Lines within a bed may vary in length to accommodate site constraints only in soil classes A-D. Reference: See "Ten foot increments work best," p. 16.
Separation distance	Multiple beds must be separated by a minimum of six feet of undisturbed natural soil.
Multiple bed orientation	Multiple beds may be oriented along the contour of the site or along the slope of the site. Note: All Enviro-Septic® systems are recommended to be designed and installed as long and narrow as possible for the site. Reference: See "Longer Enviro-Septic® systems recommended," p. 15.

Continued

Multiple bed distribution diagrams

Here are plan views of multiple bed distribution oriented along the contour of the site with 6-12” of soil material cover. More than 12” of soil material cover requires the end caps to be replaced with an offset adapter and venting.

Reference: See “System bed dimensions,” p. 13 and “Section I – Venting requirements,” p. 37.

This multiple bed combination serial distribution configuration may only be used in soil class A-D.

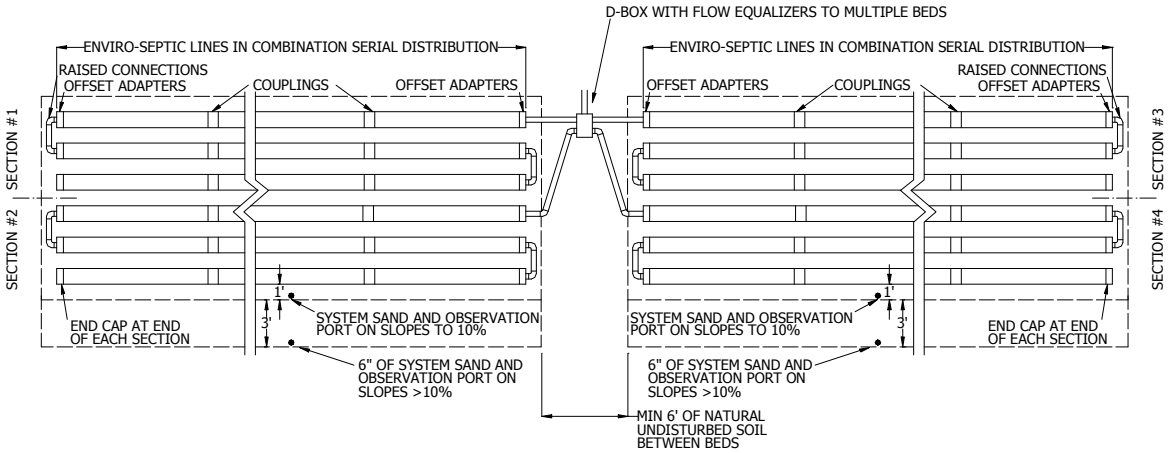

This multiple bed basic serial distribution configuration may be used in soil class A-G (beds in soil classes E-G must be configured as shown in one of the five diagrams on pp. 53 and 54).

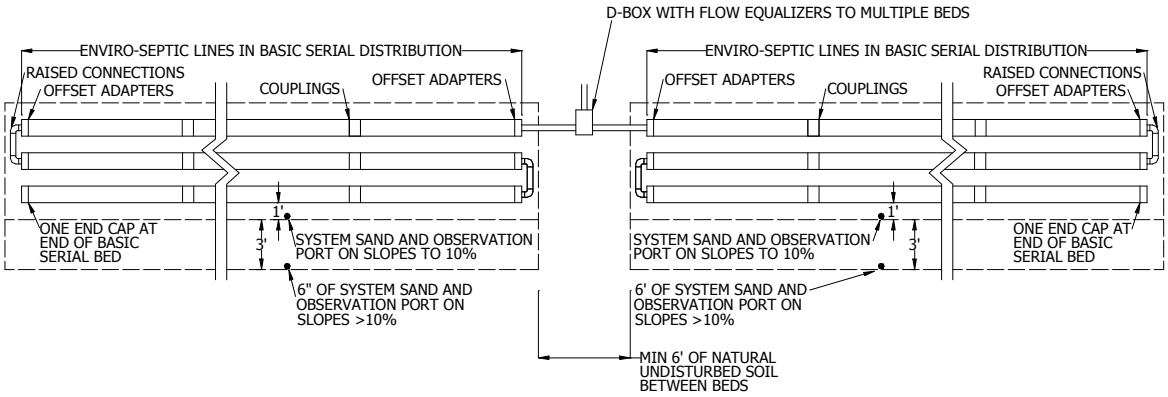

Subsurface Bed Systems

Introduction

Subsurface Enviro-Septic® systems are the preferred configuration for sites with no soil constraints to limit placement.

Definition

A subsurface bed system is a soil absorption field with the infiltrative surface (system bed/soil interface) a minimum of 4” below original grade.

Site slope of less than ½%

Here are section views of subsurface bed systems on a site slope of less than ½%.

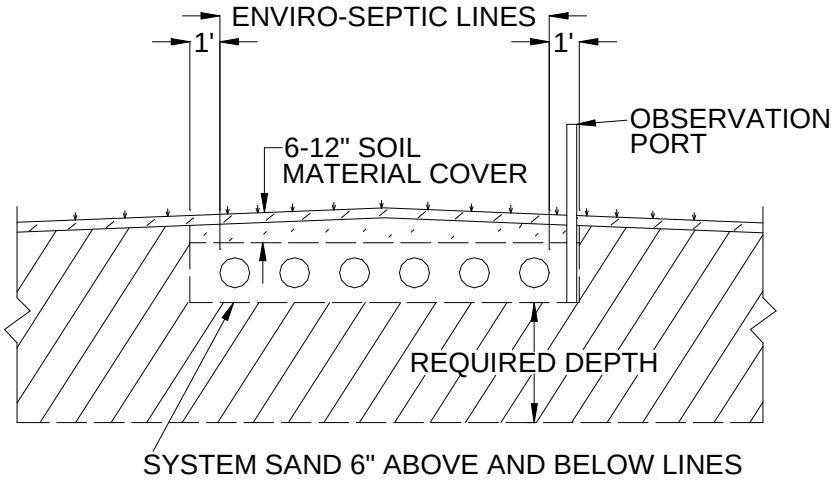

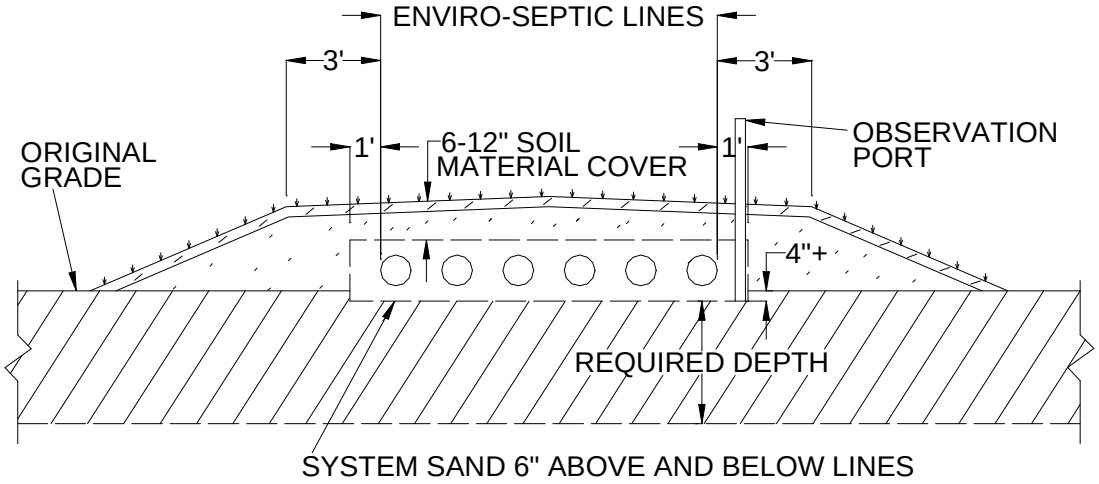

Note: A system is considered subsurface as long as the infiltrative surface (system bed/soil interface) is 4” or more below original grade.

Continued

Site slope of ½% to 10%

Here are section views of subsurface bed systems on a site slope of ½% to 10%.

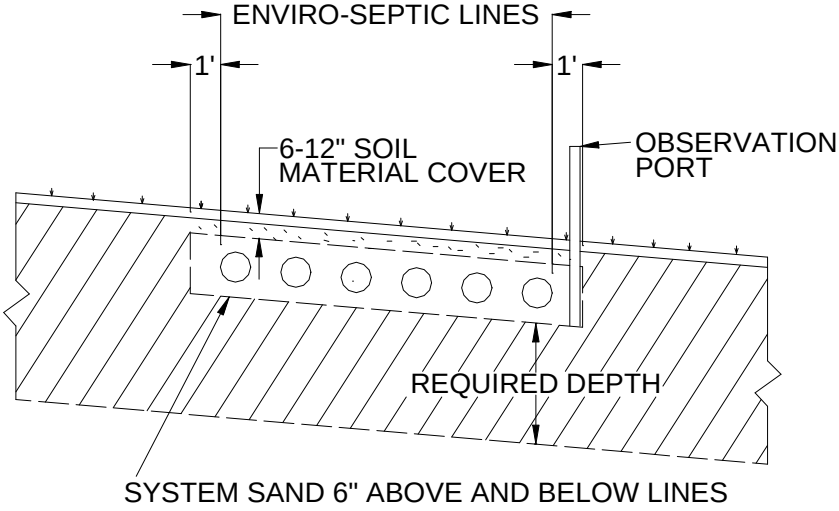

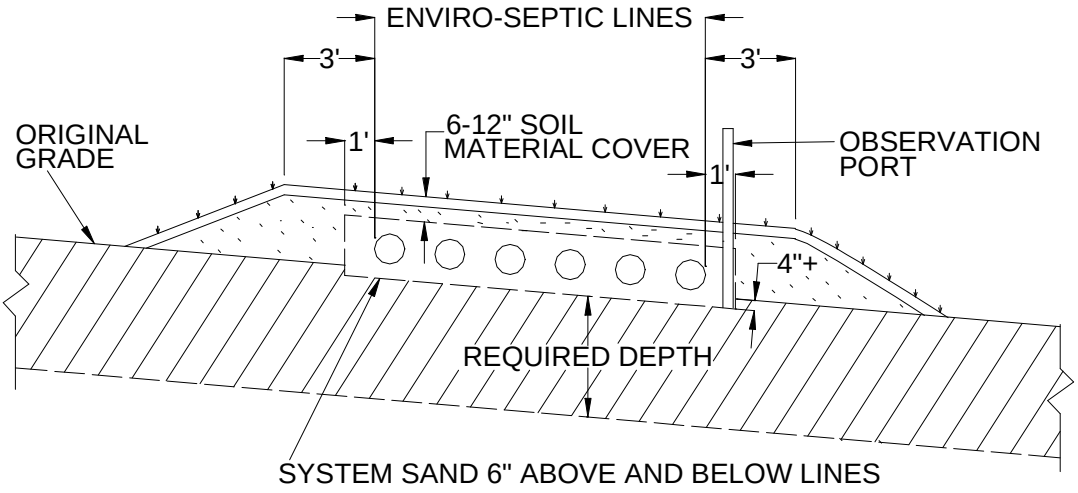

Note: A system is considered subsurface as long as the infiltrative surface (system bed/soil interface) is 4” or more below original grade.

Continued

Site slope greater than 10%

Here are section views of subsurface bed systems on a site slope greater than 10%.

Note: The maximum site slope for a subsurface bed system is 15%.

Reference: See "Sloping sites," p. 23.

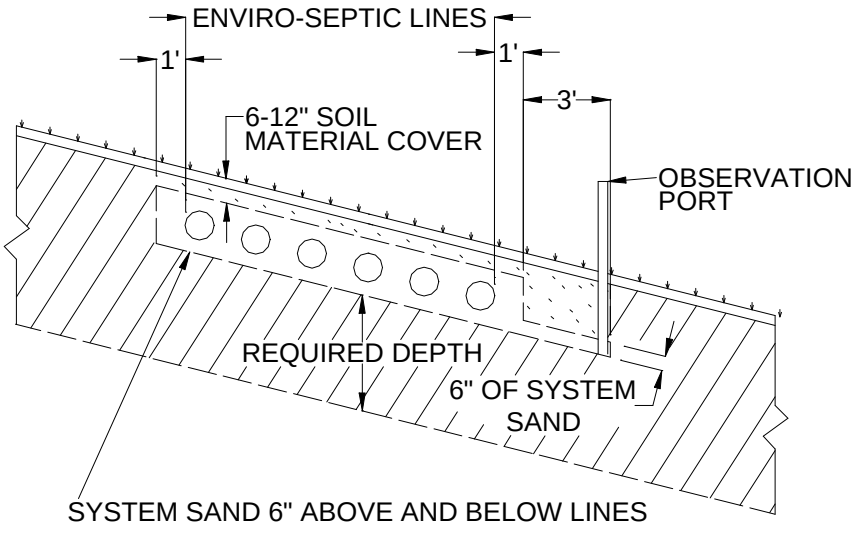

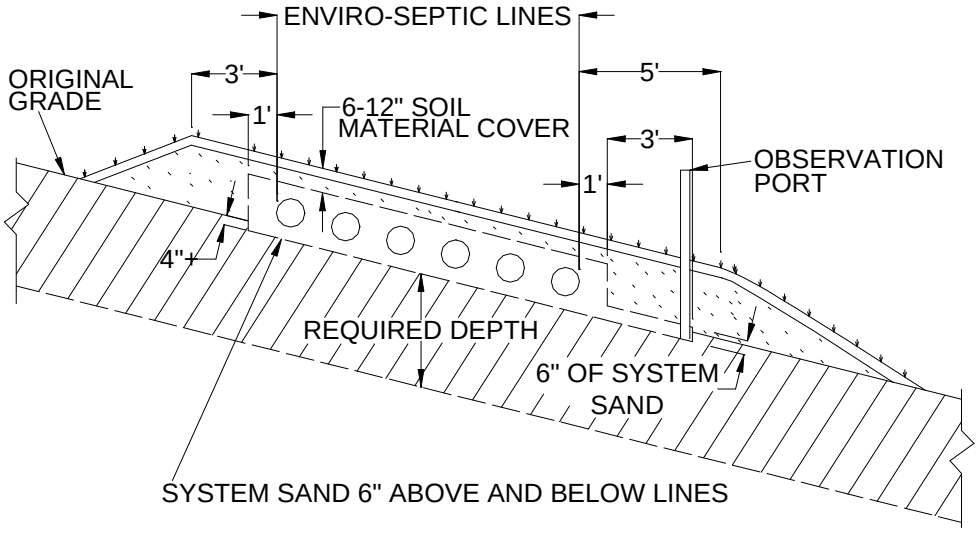

Note: A system is considered subsurface as long as the infiltrative surface (system bed/soil interface) is 4" or more below original grade.

Elevated Bed Systems

Introduction

Elevated Enviro-Septic® systems are designed for sites with soil or depth constraints that do not allow subsurface configurations.

Definition

An elevated bed system is a soil absorption field with the infiltrative surface (system bed/soil interface) at original grade.

Site slope of less than ½%

Here's a section view of an elevated bed system on a site slope of less than ½%.

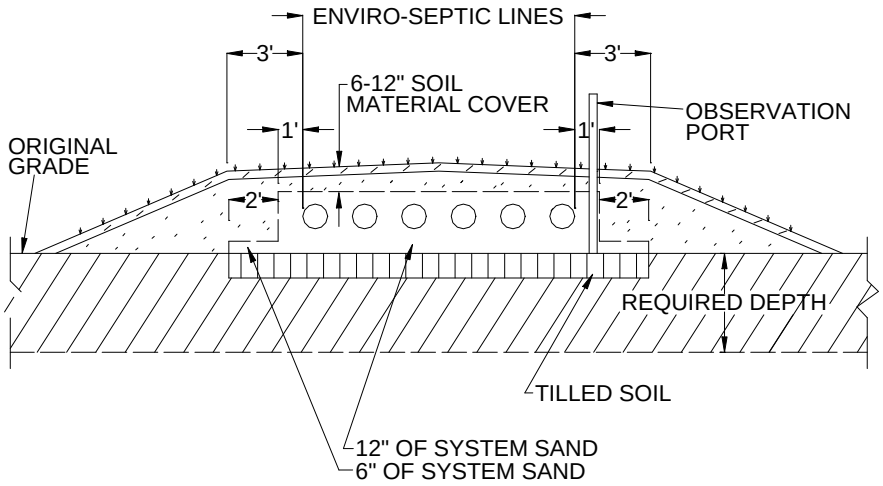

Site slope of ½ % to 6%

Here's a section view of an elevated bed system on a site slope of ½% to 6%.

Note: The maximum site slope for an elevated bed system is 6%.

Reference: See "Sloping sites," p. 23.

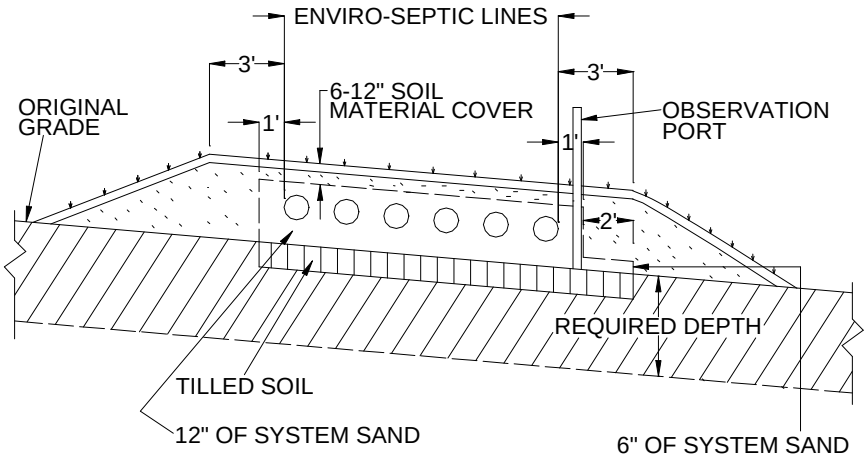

Section G
Non-Conventional System Configurations

Introduction

Non-conventional system configurations may have irregular shapes to accommodate site constraints.

Restrictions

Non-conventional system configurations may be used only in soil classes A-D.

Design requirements

All systems must be designed and installed as long and narrow as possible for the site, and laid level and parallel to the contour of the site (perpendicular to the slope of the site).

Line lengths must meet minimum required line lengths.

References: See "Line orientation," "Longer Enviro-Septic® systems recommended" and "Minimum line length: soil classes A-D," p.15.

Total linear feet requirement

Each section or bed must have at least the minimum linear feet of pipe. A section or bed may exceed the minimum linear length.

Reference: See "Section length requirement," p. 25.

Lines within a section or bed may vary in length to accommodate site constraints.

Varying length example: A 750 GPD system would require two sections. If the system is on a site with class B soils, 250 linear feet of pipe is required for a minimum of 125 feet per section. One section may consist of two lines each 62.5' long. The other section may consist of one line 60', one line 40', and one line 30'. Both sections meet the 125' minimum.

Bed lengths greater than 100'

The line lengths in this system remain within the maximum limit, but the bed is uncommonly long. Raised straight connections allow these longer bed lengths.

Note: See raised straight connections detail on the following page.

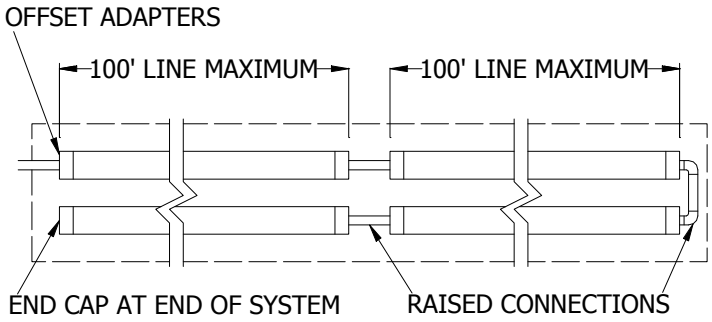

Continued

Raised straight connections

These diagrams show top and side views of raised straight connections.

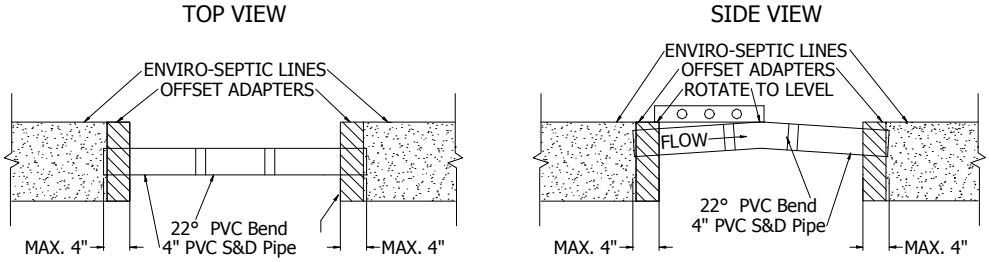

Curves

Curved configurations work well around structures, setbacks, and slopes.

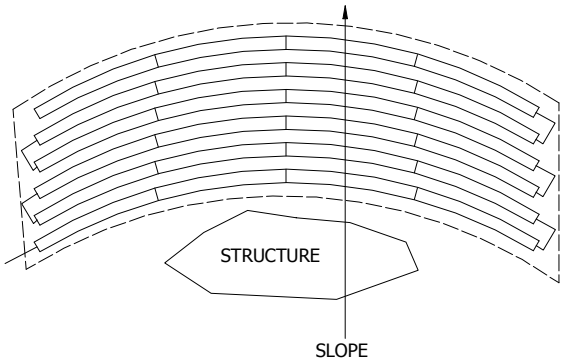

Note: Multiple curves can also be used if dictated by the contour of the site.

Angles

Angled configurations generally have one or more specific bends, but the lines must follow the contour of the site. Lines are angled by bending pipes or through the use of offset adapters.

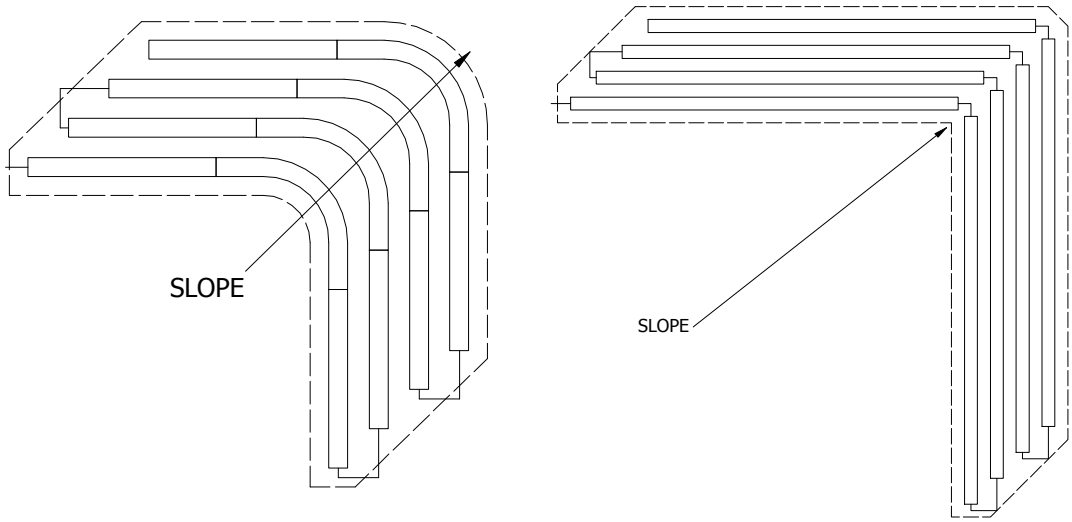

Note: A 10’ length of pipe may be bent up to 90°.

Continued

Trapezoids

This system is trapezoidal to meet horizontal setbacks to site constraints such as buildings, lot lines or surface waters.

Note: System configurations must avoid terrain features that could block subsurface flows on the down slope side.

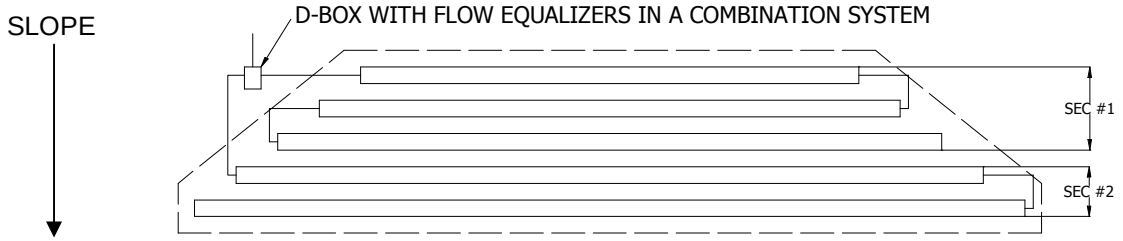

Section H
Flood Dose System Requirements

Introduction	Flood dose systems supply effluent to Enviro-Septic® pipe using a force main and distribution box when site conditions do not permit a gravity system.
Differential venting	All flood dose systems must use differential venting. Reference: See "Section I – Venting Requirements," p. 37.
Velocity control	The rate at which effluent enters Enviro-Septic® pipe must be controlled. Excessive effluent velocity can disrupt solids that settle in the Enviro-Septic® pipes.
Velocity reduction	Effluent must never be pumped directly into Enviro-Septic® pipe. A distribution box or tank must be installed between the dose tank and Enviro-Septic® pipe to reduce effluent velocity. Force mains must discharge into a velocity reducer with a baffle, 90° bend with a vacuum break, or tee.
Dose volume	Flood dose volume per dose must be no greater than 1 gallon/foot times the total length of all lines, and not exceed the design daily flow divided by 6 or be less than the design daily flow divided by 8.
Basic serial distribution limit	Systems with basic serial distribution are limited to a maximum of 40 GPM.
Combination and multi-bed distribution limit	All Enviro-Septic® systems with combination serial distribution or multiple bed distribution must use flow equalizers in D-Box outlets. Since most flow equalizers are limited to a maximum of 20 GPM, each multiple bed or section of combination serial distribution is limited to a maximum of 20 GPM.

Section I
Venting Requirements

General rule

Vent openings must be located to ensure air is drawn completely through the Enviro-Septic® system.

When to vent

Venting is required if system beds are flood dosed or under more than 12” of soil material cover.

One 4” vent is required for every 500 feet of Enviro-Septic® pipe. A single 6” vent may be installed for up to three 4” vents.

Differential venting

Differential venting is the use of high and low vents in a system.

For flood dosing systems, high vents are connected to the distribution box and low vents are connected to the opposite end of the system. Vents must be separated by a minimum of 10 vertical feet.

For gravity systems the house roof vent serves as the high vent where there are no restrictions or vents between the low vent and the roof vent.

Vent locations

Vent locations depend upon the type of system.

Gravity Systems
- A low vent through an offset adapter installed only at the end of each section or basic serial bed and more than 12” of soil material cover.
- The roof vent functions as the high vent.

Flood Dose Systems
- A low vent through an offset adapter installed only at the end of each section or basic serial bed.
- A high vent through an unused distribution box outlet.

Differential Venting for Flood Dose Systems
(Typical – Not to Scale)

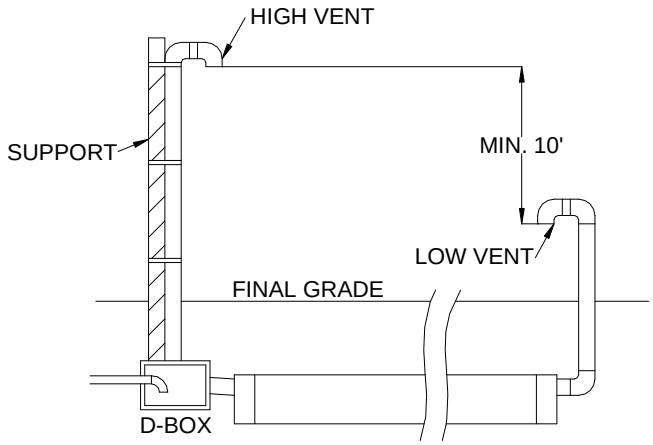

Continued

Vent locations (continued)

DIFFERENTIAL VENTING GRAVITY SYSTEM SOIL MATERIAL COVER >12"

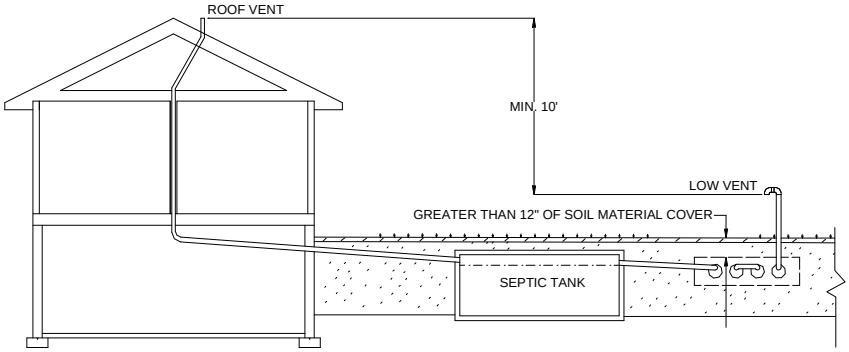

Vent manifolds

A vent manifold may be incorporated to connect the ends of a number of sections or lines of Enviro-Septic® pipe to a single vent opening.

COMBINATION SYSTEM

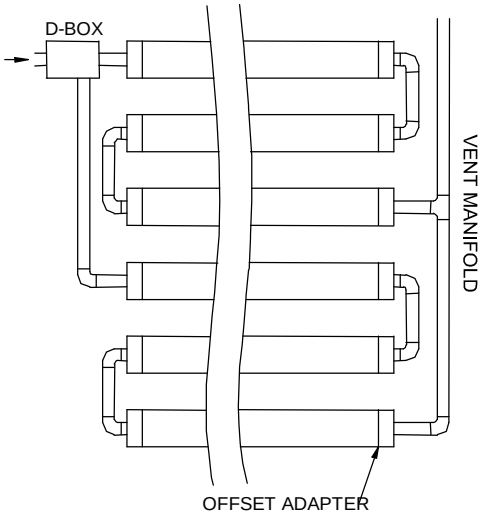

Continued

Vent piping slope

Vent piping should slope downward toward the system to prevent moisture from collecting in the pipe and blocking the passage of air.

If site conditions do not allow the vent pipe to slope toward the system, or the owner chooses to locate the high vent away from the system for aesthetic reasons (causing the vent pipe not to slope toward the system), the base of the low vent may be opened to allow drainage provided the vent pipe connecting to the system has a high point that is above the highest point of all Enviro-Septic® pipes and the low point opened for drainage is above seasonal high water table. See diagram below.

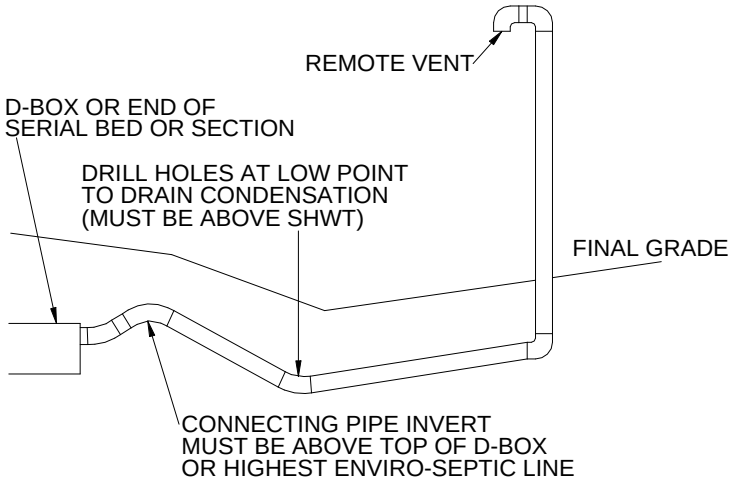

Section J
Bacteria Rejuvenation and System Expansion

Introduction

This section covers procedures for bacteria rejuvenation and explains how to expand existing systems. Local health departments must be contacted and permits obtained as required prior to Enviro-Septic® system rejuvenation, expansion, or replacement.

What is bacteria rejuvenation?

Bacteria rejuvenation is the return of bacteria to an aerobic state. Flooding, improper venting, alteration or improper depth of soil material cover, sudden use changes, introduction of chemicals or medicines, and a variety of other conditions can contribute to converting bacteria in the Enviro-Septic® pipe from an aerobic to an anaerobic state. This conversion severely limits the bacteria's ability to effectively treat effluent as well as allowing liquids to pass through.

How to rejuvenate bacteria

System bacteria are rejuvenated when they return to an aerobic state. By using the following procedure, this can be accomplished in most systems without costly removal and replacement.

1. Determine the problem causing the bacteria conversion.
2. Drain the system by excavating one end of all the lines and removing the end cap or offset adapter.
3. If foreign matter has entered the system, flush the pipes.
4. Safeguard the open excavation.
5. Guarantee a passage of air through the system.
6. Allow all lines to dry for a minimum of 72 hours.
7. Re-assemble the system to its original design configuration.

System expansion

Enviro-Septic® systems are easily expanded by adding equal lengths of pipe to each line of the original design or by adding additional equal sections.

Notes: All system expansions must comply with State and local regulations.

Local health departments must be contacted and permits obtained as required prior to Enviro-Septic® system expansion.

Reusable components

Enviro-Septic® components are not biodegradable and may be reused. In cases of improper installation it may be possible to excavate, clean, and reinstall all system components.

Continued

System replacement

If Enviro-Septic® components require replacement, simply remove the existing components and contaminated sand and replace with new components and sand.

Notes: All system replacements must comply with State and local regulations.

Local health departments must be contacted and permits obtained as required prior to Enviro-Septic® system replacement.

Section K
Enviro-Septic® Soil Classes

Introduction

Using the soil evaluation report and the table below, determine the soil class.

Reference: See 410 IAC 6-8.1-48.

Soil Classes for Onsite Systems

Soil Texture	Soil Structure: Single Grain	Granular Platy*	Strong: Angular, Subangular Blocky, Prismatic	Moderate: Angular, Subangular Blocky, Prismatic	Weak: Angular, Subangular Blocky, Prismatic	Fragipan: Very Coarse Prismatic	Structureless, Massive, Friable, V. Friable	Structureless, Massive, Compact, Firm, V. Firm
Coarse Sand								
Loamy Coarse Sand Medium Sand	A	A			A			
Fine Sand Very Fine Sand	B	B		B	B			
Loamy Sand Loamy Fine Sand Loamy Very Fine Sand	C	C		C	C			
Coarse Sandy Loam Sandy Loam Fine Sandy Loam Very Fine Sandy Loam	C	D	C	C	D		D	
Loam		E	D	E	F			
Silt Loam Silt		E	D	E	E		F	
Sandy Clay Loam		F	E	E	F			
Clay Loam Silty Clay Loam		G	F	F	G			
Sandy Clay		G	F	F	G			
Silty Clay, Clay		G	G	G	G			
Muck								
Marl, Bedrock								

Use Quick Reference Guide for Soil Classes A-D (page 45)

Use Quick Reference Guide for Soil Classes E-G (page 49)

Class A restriction

Installations in Soil Class A will be approved only on a case-by-case basis. Contact the Indiana State Department of Health for further information.

Reference: See “Soil class A design restriction,” p. 12.

Subsurface bed systems

There must be no soil horizon within 24” of the infiltrative surface that has a load rate of less then 0.25 gpd/ft^2.

Any SHWT must be 24” or more from the infiltrative surface or must be lowered to that level by the installation of subsurface drains.

The soil class for subsurface bed systems is determined by the most restrictive soil horizon found in the first 24” from the infiltrative surface.

If any soil horizon is identified in the written site evaluation report as having a soil load rate of less than 0.25 gpd/ft^2 as determined from 410 IAC 6-8.1-49(4), use the table below to determine the required depth of suitable soil between the infiltrative surface and that horizon.

IF the GPD flow is…	THEN the separation distance is…
equal to or greater than 450 GPD	at least thirty inches (30”).
less than 450 GPD	at least 24 inches (24”).

Reference: See 410 IAC 6-8.1-49(1)-(4) and 50(a)(1), (3) and (b)(1) and (3).

Elevated bed systems

There must be no soil horizon within 20” of the infiltrative surface (original grade) that has a soil load rate of less then 0.25 gpd/ft^2.

Any SHWT must be 20” or more from the infiltrative surface (original grade) or must be lowered to that level by the installation of subsurface drains.

The soil class for elevated bed systems is determined by the most restrictive soil horizon found within 20” from the infiltrative surface (original grade).

Reference: See 410 IAC 6-8.1-51(1)-(6).

Dispersal area

A dispersal area is required when the soil class is E - G or there is a horizon in the upper sixty-six (66) inches of the profile description with a soil load rate of less than 0.25 gpd/ft^2.

No structures are allowed in a dispersal area, and it must be located on the property of the owner (it may be located on an adjoining property as long as there is a recorded easement). It cannot be located in areas subject to ponding or in a closed depression where surface runoff or subsurface water movement will adversely affect performance of the Enviro-septic® system.

When site slope is ½% or less, the dispersal area is located on each side of the bed from the outside edge of the system sand. When site slope is greater than ½%, the dispersal area is located on the downslope side of the bed from the outside edge of the system sand. For soil absorption fields with a slope of greater than ½%, no part of the dispersal area may slope toward the soil absorption field.

Continued

Dispersal area (continued)

Use the table below to determine the required width of the dispersal area. The dispersal area width must be at least 10', but no more than 25'.

Dispersal Area Width for Enviro-septic® Systems in Soil Classes E - G	
Slope 1/2 % or less:	
System w/o perimeter drain	1/4 width of system sand*
Slope greater than 1/2 %: System w/o perimeter drain	1/2 width of system sand*
Any Slope: System w/ perimeter drain	10 ft.
* For multiple beds located along the slope of the site, the 'width of the system sand' is measured from the upslope edge of the upslope bed to the downslope edge of the downslope bed.	

Quick Reference Guide for Soil Classes A-D

Introduction

The unique Enviro-Septic® design provides an infinite number of system configurations that vary in length, width, slope, and shape.

Purpose

The purpose of this guide is to help designers compare layouts for any site quickly and easily in soil classes A-D.

Designers must be familiar with the information in this manual, in conjunction with using this "Quick Reference Guide," before designing an onsite system.

References: See "Section C, Specifications, Requirements, and Restrictions," pp. 10-14, "Section D, Design Criteria," pp. 15-16, "Section E, Installation, Handling, and Storage Requirements, pp. 17-22, and "Section F, Effluent Distribution and System Configurations," pp. 23-32.

Exceptions to requirements

Exceptions to any requirements in this quick reference guide require Presby Environmental, Inc., and ISDH approval.

Distribution

Effluent may be distributed in Enviro-Septic® systems installed in Soil Classes A-D using serial distribution, combination bed distribution, or multiple bed distribution.

Procedure

Complete the tasks below to size an Enviro-Septic® system for soil classes A-D. For this example, assume a 3-bedroom house with a site slope of 8%, and a soil class of C.

Task 1: Determine the linear feet of Enviro-Septic® pipe required.

Using Table A below, the soil class, and number of bedrooms, determine the required linear feet of Enviro-Septic® pipe.

Table A – Linear Footage

Soil Class	Number of Bedrooms					
	2	3	4	5	6	Add'l Room
A	85	123	165	207	249	42
B	100	150	200	250	300	50
C	130	195	260	325	390	65
D	160	240	320	400	480	80

Example: A three-bedroom home with a soil class of C requires 195 feet of pipe.

Note: See "Class A restriction," p. 42.

Continued

Task 2: Determine the slope of the proposed system.

If you know the slope of the proposed system, go to Task 3.

If not, follow this procedure to determine the slope of system.

Step	Action
1	Identify the highest elevation of the proposed location.
2	Identify the lowest elevation of the proposed location.
3	Subtract the lowest elevation from the highest elevation = elevation change.
4	Measure the horizontal distance between the two elevations = horizontal length.
5	Divide the elevation change by the horizontal length = site slope.
6	Go to Task 3.

Task 3: Determine the minimum center-to-center line spacing.

Use the soil class and site slope from Table B below to determine the required minimum center-to-center line spacing.

Table B – Line Spacing

System Slope	Soil Classes			
	A	B	C	D
0-10%	1.5’	1.5’	1.75’	3.0’
11-15%	1.5’	1.75’	2.0’	3.25’

Example: A slope of 8% with a soil class of C requires line spacing of 1.75’.

Continued

Task 4: Determine the system length and width.

Use maximum line lengths whenever possible

On sites where bed length is not a limiting design factor, the system should be designed to the maximum length the site will allow (with lines not exceeding 100' of pipe).

However, because site conditions could restrict system length, the table below includes the procedure for using system length as the limiting design factor.

Reference: See "Longer Enviro-Septic® systems recommended" and "Minimum line lengths: soil classes A-D," p. 15.

IF...	THEN use Table C on the following page to...
system length is not a limiting factor (preferred)	• find the line length in the "Line Length (Ft)" column corresponding to the maximum line length allowed (100') • follow that row across to a number equal to or greater than the required total linear feet of Enviro-Septic® pipe • follow that column down through the "# of Lines" row and to the cell formed by the intersection with the required center-to-center "Spacing" column to obtain the system width. Example: Assume the site will allow a line length of 100'; the 195' of total linear footage rounds up to 200'. The intersection of this column passing through 2 lines of pipe with the row for 1.75' center-to-center spacing results in a system width of 2.75' (outside of the 1st line to the outside of the 2nd line).
system length is a limiting factor	• find the maximum line length the site will allow in the "Line Length (Ft)" column. • follow that row across to a number equal to or greater than the required total linear feet of Enviro-Septic® pipe • follow that column down through the "# of Lines" row and to the cell formed by the intersection with the required center-to-center "Spacing" column to obtain the system width. Example: Assume the site will allow a line length of only 50'; the 195' of total linear footage rounds up to 200'. The intersection of this column passing through 4 lines of pipe with the row for 1.75' center-to-center spacing results in a system width of 6.25' (outside of the 1st line to the outside of the 4th line).

Continued

Quick Reference Guide for Soil Classes A-D, Continued

Task 4: Determine the system length and width (Continued)**.**

Note: Dark shading highlights figures used in examples.

Table C – Length and Width														
Line Length (Ft)	**Total Linear Feet of Enviro-Septic® Pipe**													
20	40	60	80	100	120	140	160	180	200	220	240	260	280	300
25	50	75	100	125	150	175	200	225	250	275	300	325	350	375
30	60	90	120	150	180	210	240	270	300	330	360	390	420	450
35	70	105	140	175	210	245	280	315	350	385	420	455	490	525
40	80	120	160	200	240	280	320	360	400	440	480	520	560	600
45	90	135	180	225	270	315	360	405	450	495	540	585	630	675
50	100	150	200	250	300	350	400	450	500	550	600	650	700	750
55	110	165	220	275	330	385	440	495	550	605	660	715	770	825
60	120	180	240	300	360	420	480	540	600	660	720	780	840	900
65	130	190	260	325	390	455	520	585	650	715	780	845	910	975
70	140	210	280	350	420	490	560	630	700	770	840	910	980	1050
75	150	225	300	375	450	525	600	675	750	825	900	975	1050	1125
80	160	240	320	400	480	560	640	720	800	880	960	1040	1120	1200
85	170	255	340	425	510	595	680	765	850	935	1020	1105	1190	1275
90	180	270	360	450	540	630	720	810	900	990	1080	1170	1260	1350
95	190	285	380	475	570	665	760	855	950	1045	1140	1235	1330	1425
100	200	300	400	500	600	700	800	900	1000	1100	1200	1300	1400	1500
# of Lines	**2**	**3**	**4**	**5**	**6**	**7**	**8**	**9**	**10**	**11**	**12**	**13**	**14**	**15**
Spacing														
1.50	2.50	4.00	5.50	7.00	8.50	10.00	11.50	13.00	14.50	16.00	17.50	19.00	20.50	22.00
1.75	2.75	4.50	6.25	8.00	9.75	11.50	13.25	15.00	16.75	18.50	20.25	22.00	23.75	25.50
2.00	3.00	5.00	7.00	9.00	11.00	13.00	15.00	17.00	19.00	21.00	23.00	25.00	27.00	29.00
2.25	3.25	5.50	7.75	10.00	12.25	14.50	16.75	19.00	21.25	23.50	25.75	28.00	30.25	32.50
2.50	3.50	6.00	8.50	11.00	13.50	16.00	18.50	21.00	23.50	26.00	28.50	31.00	33.50	36.00
2.75	3.75	6.50	9.25	12.00	14.75	17.50	20.25	23.00	25.75	28.50	31.25	34.00	36.76	39.50
3.00	4.00	7.00	10.00	13.00	16.00	19.00	22.00	25.00	28.00	31.00	34.00	37.00	40.00	43.00
3.25	4.25	7.50	10.75	14.00	17.25	20.50	23.75	27.00	30.25	33.50	36.75	40.00	43.25	46.50
3.50	4.50	8.00	11.50	15.00	18.50	22.00	25.50	29.00	32.50	36.00	39.50	43.00	46.50	50.00
3.75	4.75	8.50	12.25	16.00	19.75	23.50	27.25	31.00	34.75	38.50	42.25	46.00	49.75	53.50
4.00	5.00	9.00	13.00	17.00	21.00	25.00	29.00	33.00	37.00	41.00	45.00	49.00	53.00	57.00
4.25	5.25	9.50	13.75	18.00	22.25	26.50	30.75	35.00	39.25	43.50	47.75	52.00	56.25	60.50
4.50	5.50	10.00	14.50	19.00	23.50	28.00	32.50	37.00	41.50	46.00	50.50	55.00	59.50	64.00
4.75	5.75	10.50	15.25	20.00	24.75	29.50	34.25	39.00	43.75	48.50	53.25	58.00	62.75	67.50
5.00	6.00	11.00	16.00	21.00	26.00	31.00	36.00	41.00	46.00	51.00	56.00	61.00	66.00	71.00
System Width (outermost surface of pipe) **in feet**														

Revised Quick Reference Guide for Soil Classes E-G Elevated and Subsurface Systems, March 2007

Definition: elevated bed system	An elevated bed system is a soil absorption field with the infiltrative surface (system bed/soil interface) at original grade.
Definition: sub-surface bed system	A subsurface bed system is a soil absorption field with the infiltrative surface (system bed/soil interface) a minimum of 4" below original grade. When the infiltrative surface of the system falls to anything less than 4" below original grade, the system is designed as an elevated bed system.
Description: system sand bed	The system sand bed consists of a minimum of 6" of system sand above and below the Enviro-Septic® pipe and 1' of system sand around the outside perimeter of the Enviro-Septic® pipe lines.
Description: system sand extensions	The system sand extensions are additional system sand added beyond the edge of the system sand bed in order to meet required minimum bed widths. Note: system sand extensions consist of 6" depth of system sand.
Site preparation not included	This Quick Reference guide does not include those tasks required to prepare a site prior to bed installation. Reference: See the Revised Section E Installation, Handling, and Storage Requirements (February 2007).
Exceptions to requirements	Exceptions to any requirements in this quick reference guide require Presby Environmental, Inc., and ISDH approval.
Complete these tasks	Complete the following 7 tasks to design an Enviro-Septic® system for soil classes E-G. Examples: Four examples using these tasks are attached to this guide.

Task 1: Determine the design daily flow.

150GPD is the minimum design daily flow for each bedroom. The recommended minimum design flow for any system is 300GPD.

Example: A 4-bedroom home has a minimum design daily flow of 600GPD (4 x 150 = 600).

Task 2: Determine the system size.

Use the soil class and number of bedrooms in Table D below to determine a) the minimum line length, b) the minimum bed width, c) the minimum linear feet of Enviro-Septic® (E-S) pipe for the system, and d) the minimum number of beds.

Table D: Line Length and Sand Bed Width Minimums for Soil Classes E, F, and G

	Number of beds	1 or more				2 or more				
Soil Class	Bedrooms/GPD	2/300	3/450	4/600	5/750	6/900	7/1050	8/1200	9/1350	10/1500
E	Line Length (ft.)	50	60	70	80	90	100	110	120	130
	Bed Width (ft.)	8	10	11	12	13	14	14	15	15
F	Line Length (ft.)	70	80	90	100	110	120	130	140	150
	Bed Width (ft.)	10	12	14	16	18	19	20	21	22
G	Line Length (ft.)	80	90	100	110	120	130	140	150	160
	Bed Width (ft.)	10	13	16	18	20	21	23	24	25
Min. Linear Feet of E-S Pipe		140	210	280	350	420	490	560	630	700

Task 3: Determine the slope of the bed.

If you know the slope of the proposed system, go to Task 4.

If not, follow this procedure to determine the slope of system.

Step	Action
1	Identify the highest elevation of the proposed location.
2	Identify the lowest elevation of the proposed location.
3	Subtract the lowest elevation from the highest elevation = elevation change.
4	Measure the horizontal distance between the two elevations = horizontal length.
5	Divide the elevation change by the horizontal length = site slope.

Continued

Task 4: Design a single bed.

Follow these steps to design a single bed.

Step 1: From Table D, determine the minimum Enviro-Septic® pipe line length required.

Example: A 5-Bedroom home in Soil Class F requires a minimum line length of 100'.

Step 2: From Table D, determine the minimum linear feet of Enviro-Septic® pipe required for the system.

Example: A 5-Bedroom home in Soil Class F requires a minimum of 350 linear feet of pipe.

Step 3: Divide the minimum linear feet of Enviro-Septic® pipe required by the minimum Enviro-Septic® pipe line length and round up to the nearest whole number to determine the number of lines required in the bed (remember, all lines within a bed must be equal in length).

Example: Dividing the 350 minimum linear feet of pipe by the 100' minimum line length equals 3.5 rounded up to 4 lines.

Step 4: From Table D, determine the minimum width of the sand bed.

Example: The minimum bed width for a 5-Bedroom home in Soil Class F is 16'.

Design Notes:

- No single line of pipe may be longer than 100 feet.
- System sand bed lengths are 2' longer than line lengths due to a required 1' sand extension on the end of each Enviro-Septic® pipe line.
- All lines within a bed must be equal in length and one foot from the end of the system sand bed.
- No system sand bed may be designed with fewer than two lines of Enviro-Septic® pipe.
- All Enviro-Septic® beds in Soil Classes E-G require basic serial distribution.
- Each basic serial distribution bed is limited to 750GPD.
- Design daily flows greater than 750GPD require multiple basic serial distribution beds.
- Jetted bathtubs with capacity greater than 125 gallons require an increase in the design daily flow of 150GPD per 410 IAC 6-8.1-31(j).

Continued

Design Notes: (continued)

- If any of the system is installed above grade, the minimum length of the system bed from Step 1 will lengthen due to grading necessary to maintain required side slopes (3:1).
- In Step 3, by comparing the cost of materials, the designer may determine that it is cost effective to lengthen the system bed beyond the minimum required length and remove the last line. Remember, system beds must have at least 2 lines of Enviro-Septic® pipe not longer than 100' each.

Task 5: Design a multiple bed system.

Multiple beds are required when

- design daily flow is greater than 750GPD
- site constraints limit system length
- the minimum Enviro-Septic® pipe line length required in Table D exceeds 100 feet.

Follow these steps for a multiple bed system.

Step 1: Follow steps 1 – 4 in Task 4.

Step 2: Determine the number of beds necessary for the system if design daily flow is greater than 750GPD, site constraints limit system length, or the minimum Enviro-Septic® pipe line length exceeds 100 feet.

Design notes for multiple bed systems:

- The optimal layout of multiple bed systems is **end-to-end** (butterfly), rather than **side-to-side** (see illustrations in Task 7).

- The design for large multiple bed systems should be as long and narrow as the site will allow.

  Example: From Table D, a 6-bedroom/900GPD system in soil class F requires a minimum line length of 110' and bed width of 18'. This results in **two beds** with line lengths of 55' and bed widths of 18'.

  A system with this design daily flow could be designed as **two** 3-bedroom /450GPD **beds** requiring a minimum line length of 80' per bed and a bed width of 12' – this is an optimum system layout as it results in a design that is long and narrow.

  In order of preference, as site conditions allow, the system should be designed as follows: 1) two beds with line lengths of 80' and bed widths of 12' laid **end-to-end** (butterfly); 2) two beds with line lengths of 55' and bed widths of 18' laid **end-to-end** (butterfly); 3) two beds with line lengths of 80' and bed widths of 12' laid **side-to-side;** and 4) two beds with line lengths of 55' and bed widths of 18' laid **side-to-side** (see illustrations in Task 7).

Continued

Task 6: Determine the Enviro-Septic® pipe configuration for the system sand bed and locate the system sand extension(s).

Pipe configurations within the **elevated** system sand bed.

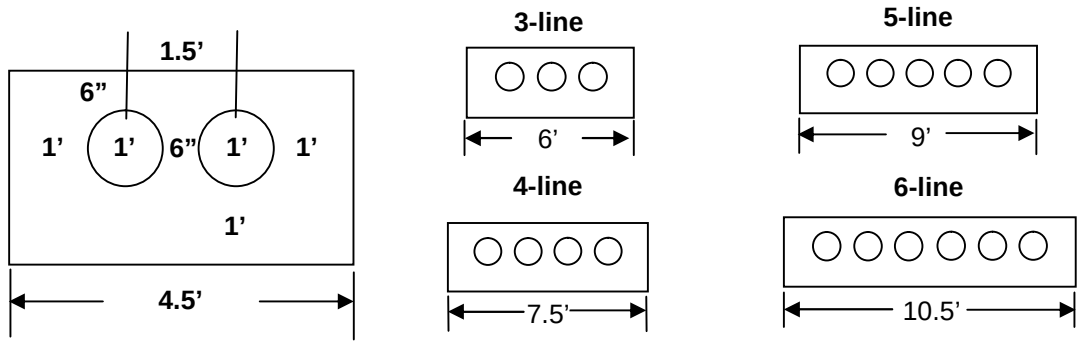

For all elevated beds the vertical dimensions total 30" of system sand: 12" of system sand below the Enviro-Septic® pipe, the 12" diameter Enviro-Septic® line, and 6" of system sand above the Enviro-Septic® line. 6" to 12" of soil material cover is placed over the top 6" of system sand.

Pipe configurations within the **subsurface** system sand bed.

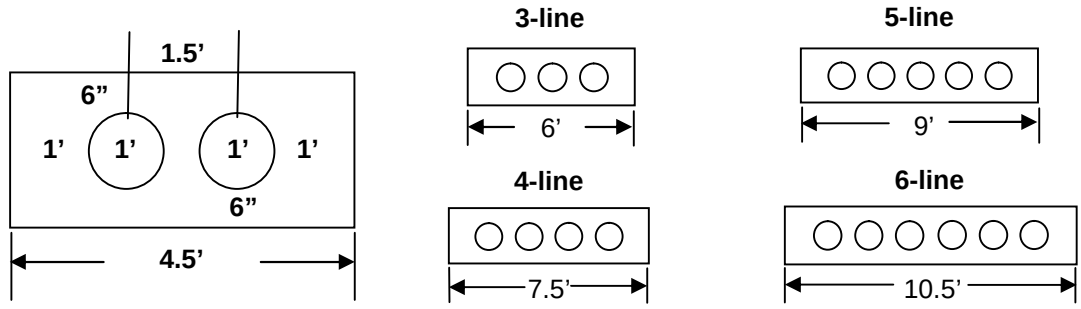

For all subsurface beds the vertical dimensions total 24" of system sand: 6" of system sand below the Enviro-Septic® pipe, the 12" diameter Enviro-Septic® line, and 6" of system sand above the Enviro-Septic® line. 6" to 12" of soil material cover is placed over the top 6" of system sand.

<u>Design criteria</u>:

- All Enviro-Septic® lines within a system sand bed must be equal in length and one foot from the end of the system sand bed.
- All Enviro-Septic® lines are spaced 1.5' on center.
- System sand extends 1' around the perimeter of the Enviro-Septic® pipe layout.
- No system sand bed may be designed with fewer than two lines of Enviro-Septic® pipe.

Continued

Task 6: Determine the Enviro-Septic® pipe configuration for the system sand bed and locate the system sand extension(s), continued.

If the system slope is ½% or less, locate equal system sand extensions on each side of the system sand bed.

Level elevated bed system

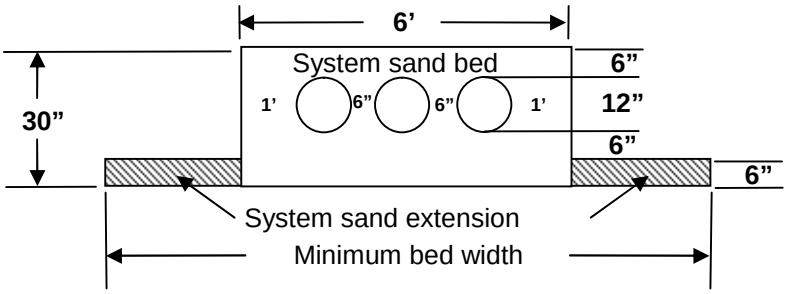

Level subsurface bed system

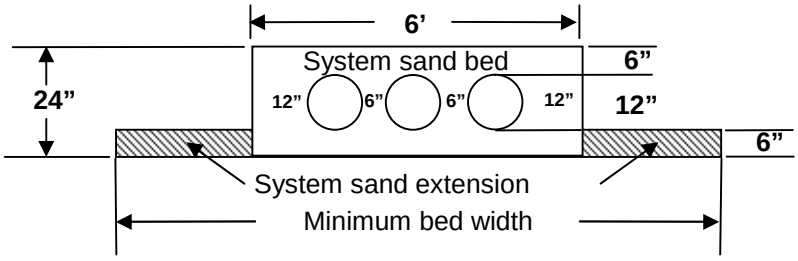

If the system slope is greater than ½%, locate the entire system sand extension downslope from the system sand bed. The maximum site slope for an elevated system is 6% and 15% for a subsurface system.

Sloping elevated bed system

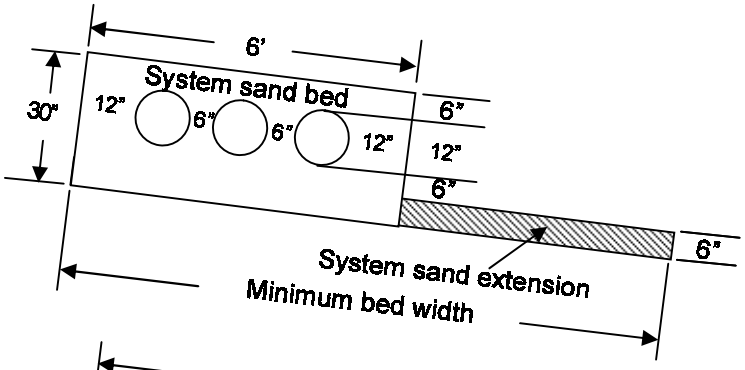

Sloping subsurface bed system

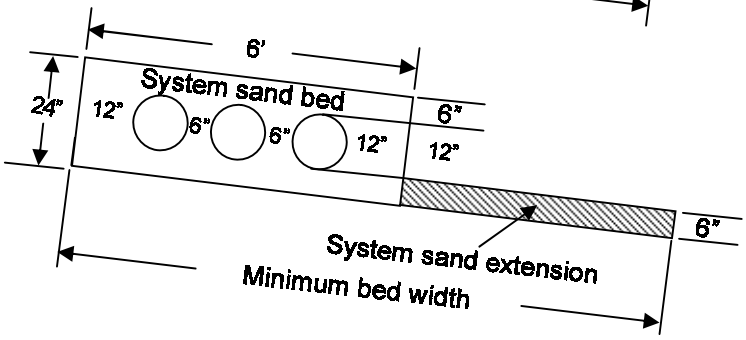

Continued

Task 7: Apply the proper separation distance between multiple beds.

Design notes:

- Each bed in a multiple bed system must be equal in length.
- Flow division to multiple beds through a distribution box (D-Box) must ensure that each bed receives an equal volume of effluent.
- If the D-Box is installed on system sand, the system sand beneath the D-Box must be compacted to provide a stable base.
- All Enviro-Septic® lines within a system sand bed must be equal in length and one foot from the end of the system sand bed.
- All Enviro-Septic® lines must be spaced 1.5' on center.
- Subsurface drains are required when the site evaluation report describes a seasonal high water table within the depth of soil required for the onsite system. When subsurface drains are required, a segment drain must be installed between all **side-to-side** beds in a multiple bed system. (See revised "Subsurface drainage system requirements.")
- When the site evaluation report does not describe a seasonal high water table within the depth of soil required for the onsite system, all **side-to-side** beds in a multiple bed system must be separated by at least twenty feet plus the width of excavation for a drain, or the width of the bed as described in Table D, whichever is greater.

Elevated or subsurface **end-to-end** (butterfly) systems (Sloping)

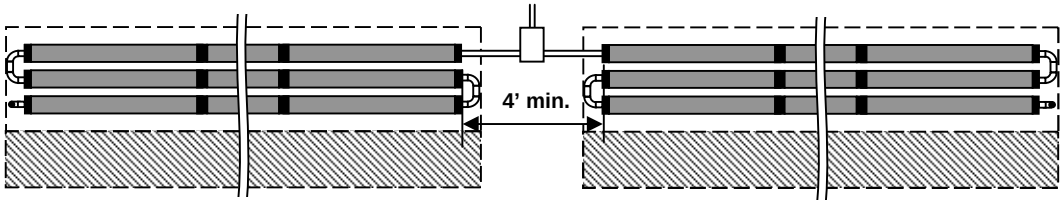

Elevated or subsurface **end-to-end** (butterfly) systems (Level)

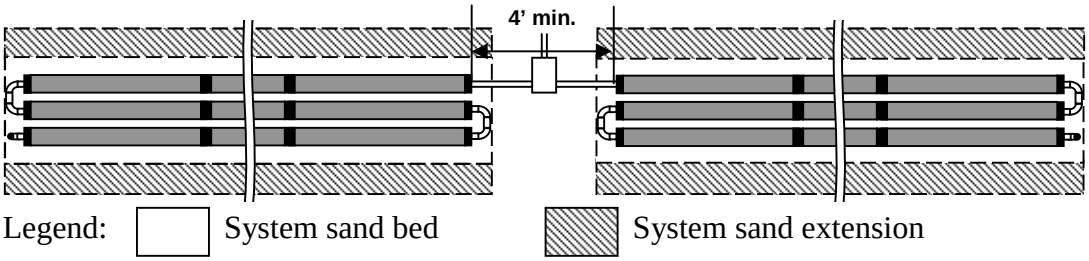

Notes: In **end-to-end** (butterfly) multiple systems, the beds must be separated by a minimum of four feet between the pipe ends.

In **end-to-end** (butterfly) elevated bed systems, the separation distance between the beds can be completely filled with system sand, provided this area is tilled.

In **end-to-end** subsurface systems, the separation distance between the beds may be excavated and filled with system sand.

Continued

Revised Quick Reference Guide for Soil Classes E-G Elevated and Subsurface Systems, March 2007, Continued

If multiple beds are placed **side-to-side**, the minimum horizontal separation distance is 20' plus the width of excavation for a drain, or the width of the bed as described in Table D, whichever is greater.

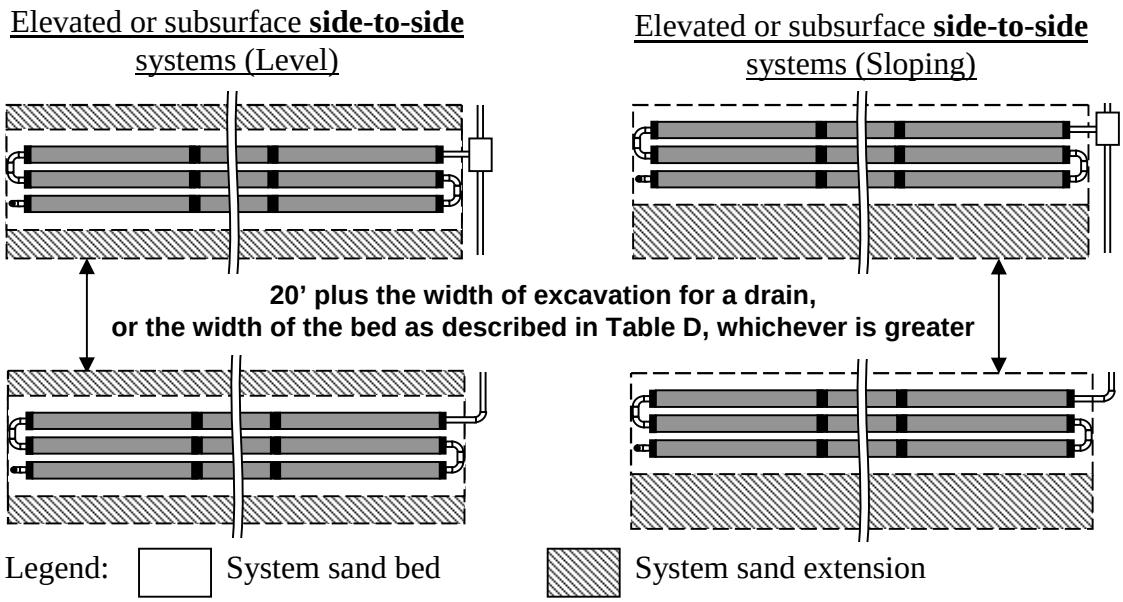

Note: In **side-to-side** multiple bed systems, there must be no system sand in the separation distance between the beds.

Reference: See "Site preparation for *elevated bed systems*," in the Revised Section E, Installation, Handling, and Storage Requirements, March 2007.

Examples attached

Four examples of using the 7 tasks for designing elevated and subsurface Enviro-Septic® systems are included on the following pages.

Example	Description	Page
1	Example 1: Elevated 3-Bedroom/450GPD Home in Soil Class F Sloping less than ½%	9
2	Example 2: Elevated 6-Bedroom/900GPD Home in Soil Class G Sloping 6%	10
3	Example 3: Subsurface 4-Bedroom/600GPD Home in Soil Class G Sloping Less Than ½%	12
4	Example 4: Subsurface 6-Bedroom/900GPD Home in Soil Class F Sloping 15%	13

Example 1: Elevated 3-Bedroom/450GPD Home in Soil Class F Sloping less than ½%

Introduction This example uses the 7 tasks in this Quick Reference Guide to design an Enviro-Septic® system for a 3-Bedroom/450GPD home in Soil Class F.

Task 1: Determine the design daily flow.

The design daily flow for a 3-Bedroom home in Soil Class F is 450GPD.

Task 2: Determine the system size.

Minimum line length: 80'
Minimum bed width: 12'
Minimum linear feet of Enviro-Septic® pipe: 210'
Number of beds: 1 or more

Task 3: Determine the slope of the bed.

The slope is less than ½ %.

Task 4: Design for a single bed system.

Step 1: The minimum Enviro-Septic® pipe line length is 80'.

Step 2: The minimum linear feet of Enviro-Septic® pipe is 210'.

Step 3: Dividing the 210 minimum linear feet of pipe by the 80' minimum line length equals 2.625 rounded up to 3 lines in each bed.

Step 4: The minimum width of the sand bed is 12'.

Task 5: Design a multiple bed system.

This system does not require multiple beds.

Task 6: Determine the Enviro-Septic® pipe configuration for the system sand bed and locate the system sand extension(s).

These diagrams show the 3-line pipe configuration for the system sand bed and the system sand extensions for this system.

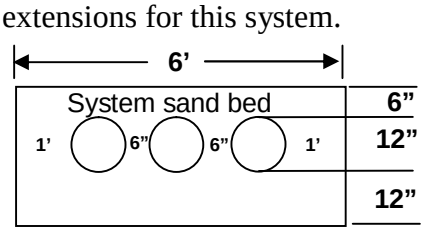

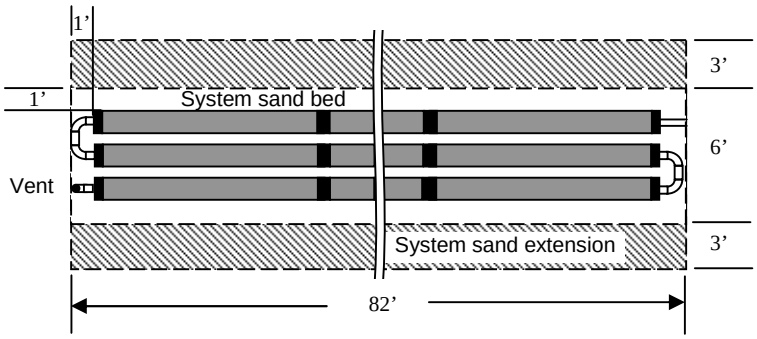

Task 7: Since this system does not require multiple beds, Task 7 is not necessary.

Example 2: Elevated 6-Bedroom/900GPD Home in Soil Class G Sloping 6%

Introduction This example uses the 7 tasks in this Quick Reference Guide to design an Enviro-Septic® system for a 6-Bedroom/900GPD home in Soil Class G.

Task 1: Determine the design daily flow.

The daily design flow for a 6-Bedroom home in Soil Class G is 900GPD.

Task 2: Determine the system size.

Minimum line length: 120'
Minimum bed width: 20'
Minimum linear feet of Enviro-Septic® pipe: 420'
Number of beds: 2 or more

Task 3: Determine the slope of the bed.

The slope is 6%, the maximum slope for an elevated system.

Task 4: Design for a single bed.

Step 1: The minimum Enviro-Septic® pipe line length is 120'.

Step 2: The minimum linear feet of Enviro-Septic® pipe is 420'.

Step 3: Dividing the 420 minimum linear feet of pipe by the 120' minimum line length equals 3.5 rounded up to 4 lines in each bed.

Step 4: The minimum width of each sand bed is 20'.

Task 5: Design a multiple bed system.

The minimum line length is 120' and exceeds the 100' maximum (and, as well, the design daily flow is greater than 750 GPD). Divide the minimum line length of 120' by 2 to get two beds, each with 4-60' lines of Enviro-Septic® pipe and each 20' wide.

However, the design notes and example in Task 5 state that optimum system design is as **long and narrow** as the site will allow. Therefore, assuming the site allows, it is preferable to design the system as two 3-bedroom/450 GPD beds laid out **end-to-end** (butterfly) as follows:

Step 1: The minimum Enviro-Septic® pipe line length per bed is 90'.

Step 2: The minimum linear feet of Enviro-Septic® pipe per bed is 210'.

Step 3: Dividing the 210 minimum linear feet of pipe by the 90' minimum line length equals 2.33 rounded up to 3 lines per bed.

Step 4: The minimum width of each sand bed is 13'.

The optimum design for this Enviro-Septic® system is two beds, each with 3-90' lines of Enviro-Septic® pipe and each 13' wide.

Continued

Example 2: Elevated 6-Bedroom/900GPD Home in Soil Class G Sloping 6%, Continued

Task 6: Determine the Enviro-Septic® pipe configuration for the system sand bed and locate the system sand extension(s).

These diagrams show the 3-line and 4-line pipe configurations for each system sand bed (6% slope).

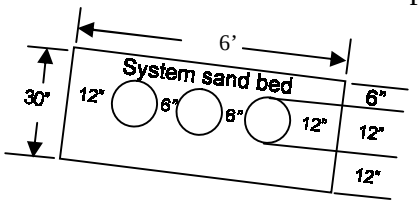

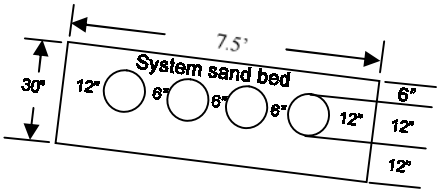

These diagrams show the location of the system sand bed upslope of the system sand extension.

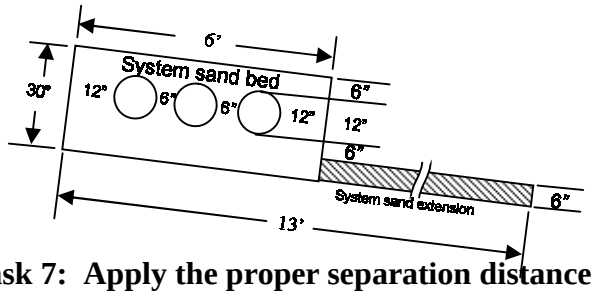

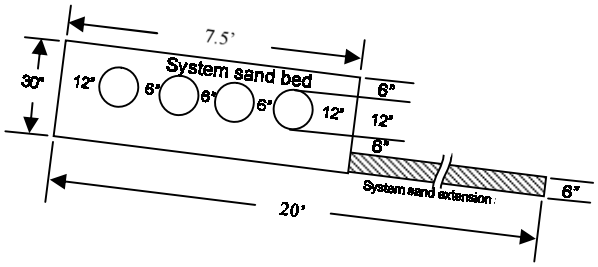

Task 7: Apply the proper separation distance between multiple beds.

These diagrams show the optimal 2-bed design (90' for each line) and the less preferable 2-bed design (60' for each line) with a minimum separation distance of 4' between the beds.

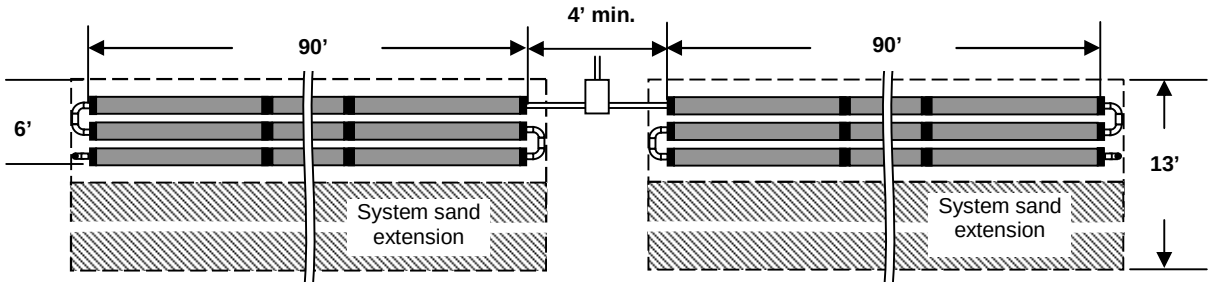

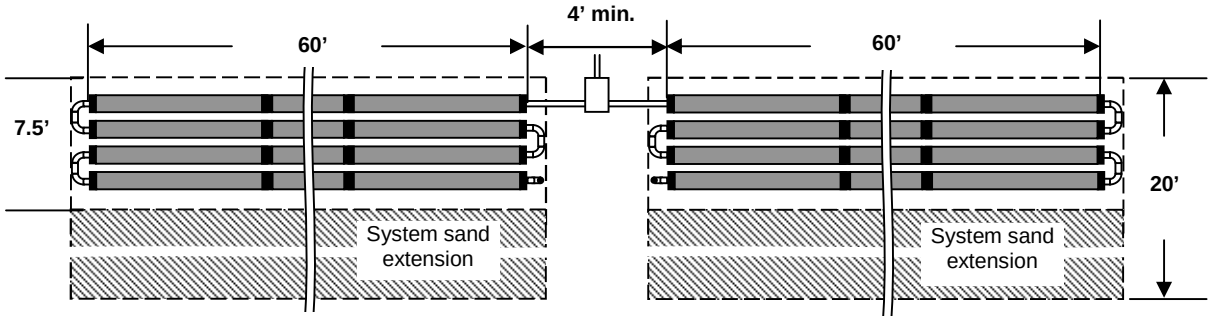

Example 3: Subsurface 4-Bedroom/600GPD Home in Soil Class G Sloping Less Than ½%

Introduction This example uses the 7 tasks in this Quick Reference Guide to design an Enviro-Septic® system for a 4-Bedroom/600GPD home in Soil Class G.

Task 1: Determine the design daily flow.

The design daily flow for a 4-Bedroom home in Soil Class G is 600GPD.

Task 2: Determine the system size.

Minimum line length: 100'
Minimum bed width: 16'
Minimum linear feet of Enviro-Septic® pipe: 280'
Number of beds: 1 or more

Task 3: Determine the slope of the bed.

The slope is less than ½ %.

Task 4: Design for a single bed system.

Step 1: The minimum Enviro-Septic® pipe line length is 100'.

Step 2: The minimum linear feet of Enviro-Septic® pipe is 280'.

Step 3: Dividing the 280 minimum linear feet of pipe by the 100' minimum line length equals 2.8 rounded up to 3 lines.

Step 4: The minimum width of the sand bed is 16'.

Task 5: Design a multiple bed system.

This system does not require multiple beds.

Task 6: Determine the Enviro-Septic® pipe configuration for the system sand bed and locate the system sand extension(s).

These diagrams show the 3-line pipe configuration for the system sand bed and the system sand extensions for this system.

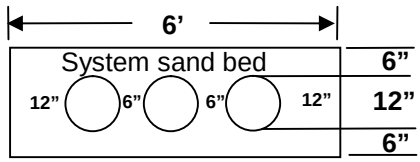

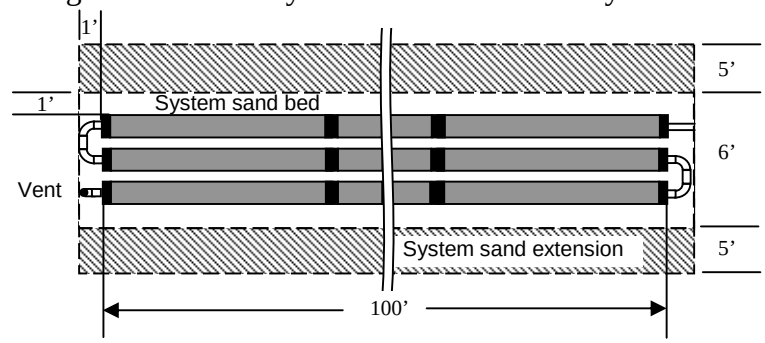

Task 7: Since this system does not require multiple beds, Task 7 is not necessary.

Example 4: Subsurface 6-Bedroom/900GPD Home in Soil Class F Sloping 15%

Introduction This example uses the 7 tasks in this Quick Reference Guide to design an Enviro-Septic® system for a 6-Bedroom/900GPD home in Soil Class F.

Task 1: Determine the design daily flow.

The daily design flow for a 6-Bedroom home in Soil Class F is 900GPD.

Task 2: Determine the system size.

Minimum line length: 110'
Minimum bed width: 18'
Minimum linear feet of Enviro-Septic® pipe: 420'
Number of beds: 2 or more

Task 3: Determine the slope of the bed.

The slope is 15%, the maximum slope for a subsurface system.

Task 4: Design for a single bed.

Step 1: The minimum Enviro-Septic® pipe line length is 110'.

Step 2: The minimum linear feet of Enviro-Septic® pipe is 420'.

Step 3: Dividing the 420 minimum linear feet of pipe by the 110' minimum line length equals 3.82 rounded up to 4 lines in each bed.

Step 4: The minimum width of each sand bed is 18'.

Task 5: Design a multiple bed system.

The minimum line length is 110' and exceeds the 100' maximum (and, as well, the design daily flow is greater than 750 GPD). Divide the minimum line length of 110' by 2 to give us two beds each with 4-55' lines of Enviro-Septic® pipe and each 18' wide.

However, the design notes and example in Task 5 state that optimum system design is as **long and narrow** as the site will allow. Therefore, assuming the site allows, it is preferable to design the system as two 3-bedroom/450 GPD beds laid out **end-to-end** (butterfly) as follows:

Step 1: The minimum Enviro-Septic® pipe line length per bed is 80'.

Step 2: The minimum linear feet of Enviro-Septic® pipe per bed is 210'.

Step 3: Dividing the 210 minimum linear feet of pipe by the 80' minimum line length equals 2.62 rounded up to 3 lines per bed.

Step 4: The minimum width of each sand bed is 12'.

The optimum design for this Enviro-Septic® system is two beds, each with 3-80' lines of Enviro-Septic® pipe and each 12' wide.

Example 4: Subsurface 6-Bedroom/900GPD Home in Soil Class F Sloping 15%, Continued

Task 6: Determine the Enviro-Septic® pipe configuration for the system sand bed and locate the system sand extension(s).

These diagrams show the 3-line and 4-line pipe configuration for each system sand bed (15% slope).

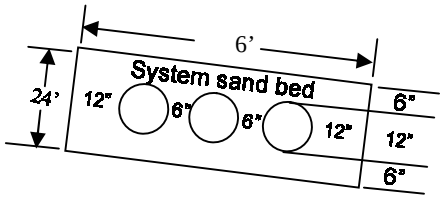

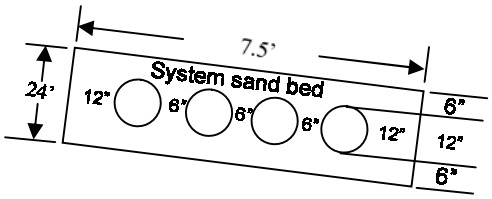

These diagrams show the location of the system sand bed upslope of the system sand extension.

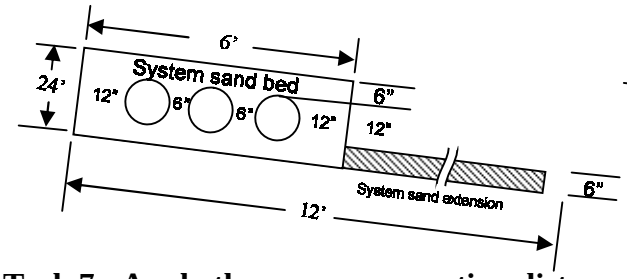

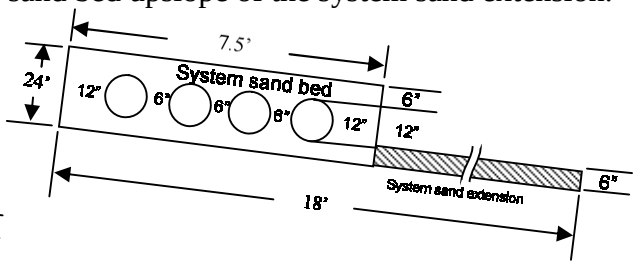

Task 7: Apply the proper separation distance between multiple beds.

In order of preference, as site conditions allow, this system should be designed as follows:

1) two beds with line lengths of 80' and bed widths of 12' laid **end-to-end** (butterfly).

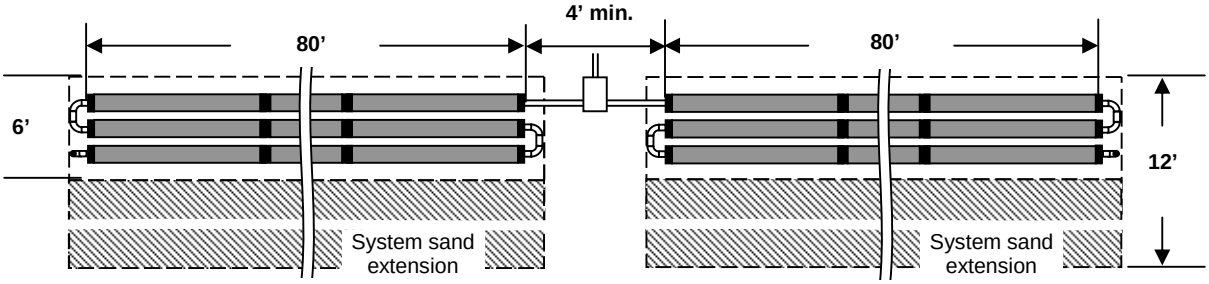

2) two beds with line lengths of 55' and bed widths of 18' laid **end-to-end** (butterfly).

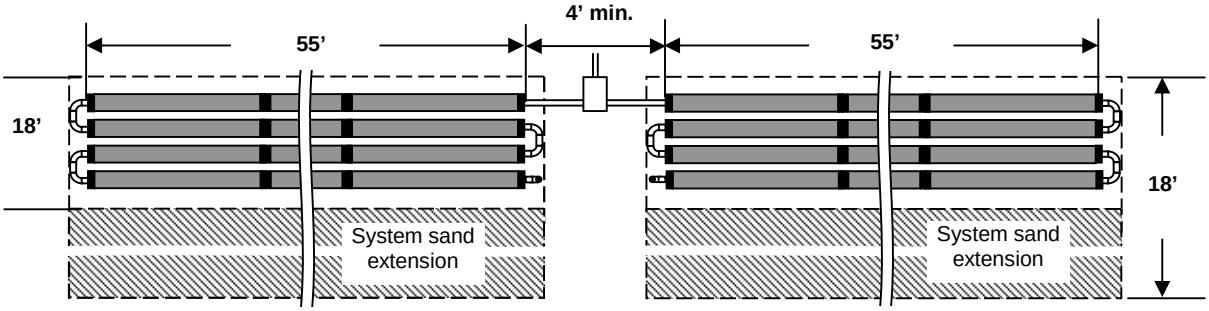

Continued

Example 4: Subsurface 6-Bedroom/900GPD Home in Soil Class F Sloping 15%, Continued

Task 7: Apply the proper separation distance between multiple beds (continued)**.**

3) two beds with line lengths of 80’ and bed widths of 12’ laid **side-to-side.**

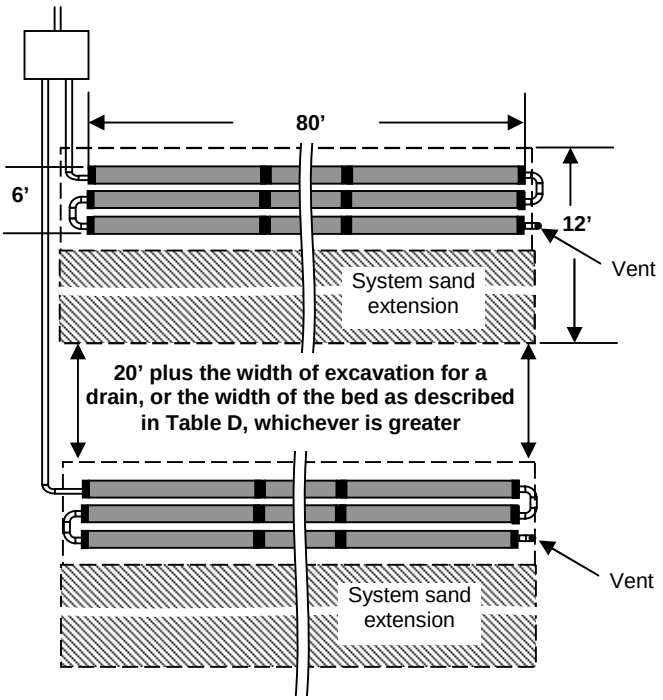

4) two beds with line lengths of 55’ and bed widths of 18’ laid **side-to-side.**

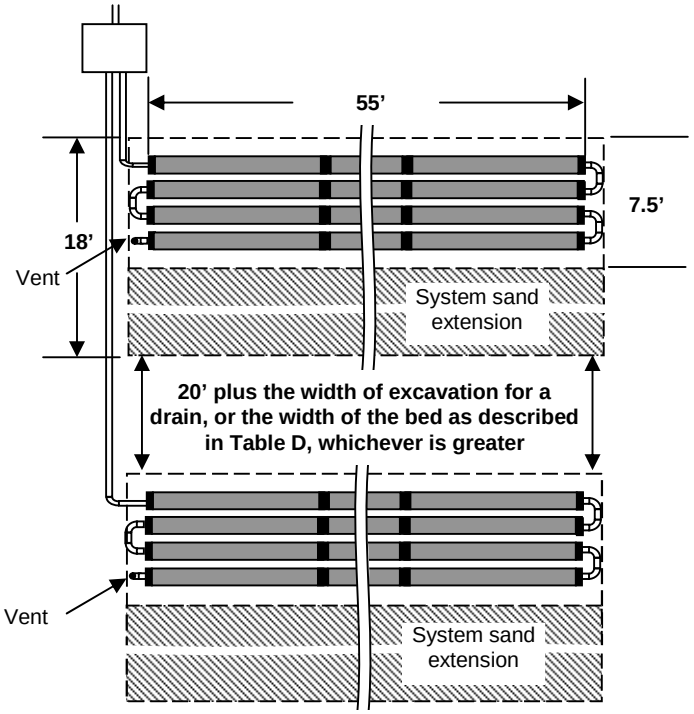

ELEVATION DIFFERENCE BETWEEN LINES ON SLOPING SITES

SYSTEM SLOPE

PIPE SPACING CENTER TO CENTER	1%		2%		3%		4%		5%		6%		7%		8%		9%		10%		11%		12%		13%		14%		15%	
5.00'	5/8	0.050	1 3/16	0.100	1 13/16	0.150	2 3/8	0.200	3	0.250	3 5/8	0.300	4 3/16	0.350	4 13/16	0.400	5 3/8	0.450	6	0.500	6 5/8	0.550	7 3/16	0.600	7 13/16	0.650	8 3/8	0.700	9	0.750
4.75'	9/16	0.048	1 1/8	0.095	1 11/16	0.143	2 1/4	0.190	2 7/8	0.238	3 7/16	0.285	4	0.333	4 9/16	0.380	5 1/8	0.428	5 11/16	0.475	6 1/4	0.523	6 13/16	0.570	7 7/16	0.618	8	0.665	8 9/16	0.713
4.50'	9/16	0.045	1 1/16	0.090	1 5/8	0.135	2 3/16	0.180	2 11/16	0.225	3 1/4	0.270	3 3/4	0.315	4 5/16	0.360	4 7/8	0.405	5 3/8	0.450	5 15/16	0.495	6 1/2	0.540	7	0.585	7 9/16	0.630	8 1/8	0.675
4.25'	1/2	0.043	1	0.085	1 1/2	0.128	2 1/16	0.170	2 9/16	0.213	3 1/16	0.255	3 9/16	0.298	4 1/16	0.340	4 9/16	0.383	5 1/8	0.425	5 5/8	0.468	6 1/8	0.510	6 5/8	0.553	7 1/8	0.595	7 5/8	0.638
4.00'	1/2	0.040	15/16	0.080	1 7/16	0.120	1 15/16	0.160	2 3/8	0.200	2 7/8	0.240	3 3/8	0.280	3 13/16	0.320	4 5/16	0.360	4 13/16	0.400	5 1/4	0.440	5 3/4	0.480	6 1/4	0.520	6 3/4	0.560	7 3/16	0.600
3.75'	7/16	0.038	7/8	0.075	1 3/8	0.113	1 13/16	0.150	2 1/4	0.188	2 11/16	0.225	3 1/8	0.263	3 5/8	0.300	4 1/16	0.338	4 1/2	0.375	4 15/16	0.413	5 3/8	0.450	5 7/8	0.488	6 5/16	0.525	6 3/4	0.563
3.50'	7/16	0.035	13/16	0.070	1 1/4	0.105	1 11/16	0.140	2 1/8	0.175	2 1/2	0.210	2 15/16	0.245	3 3/8	0.280	3 3/4	0.315	4 3/16	0.350	4 5/8	0.385	5 1/16	0.420	5 7/16	0.455	5 7/8	0.490	6 5/16	0.525
3.25'	3/8	0.033	3/4	0.065	1 3/16	0.098	1 9/16	0.130	1 15/16	0.163	2 5/16	0.195	2 3/4	0.228	3 1/8	0.260	3 1/2	0.293	3 7/8	0.325	4 5/16	0.358	4 11/16	0.390	5 1/16	0.423	5 7/16	0.455	5 3/4	0.488
3.00'	3/8	0.030	3/4	0.060	1 1/16	0.090	1 7/16	0.120	1 13/16	0.150	2 3/16	0.180	2 1/2	0.210	2 7/8	0.240	3 1/4	0.270	3 5/8	0.300	3 15/16	0.330	4 5/16	0.360	4 11/16	0.390	5 1/16	0.420	5 3/8	0.450
2.75'	5/16	0.028	11/16	0.055	1	0.083	1 5/16	0.110	1 5/8	0.138	2	0.165	2 5/16	0.193	2 5/8	0.220	3	0.248	3 5/16	0.275	3 5/8	0.303	3 15/16	0.330	4 5/16	0.358	4 5/8	0.385	4 15/16	0.413
2.50'	5/16	0.025	5/8	0.050	7/8	0.075	1 3/16	0.100	1 1/2	0.125	1 13/16	0.150	2 1/8	0.175	2 3/8	0.200	2 11/16	0.225	3	0.250	3 5/16	0.275	3 5/8	0.300	3 7/8	0.325	4 3/16	0.350	4 1/2	0.375
2.25'	1/4	0.023	9/16	0.045	13/16	0.068	1 1/16	0.090	1 3/8	0.113	1 5/8	0.135	1 7/8	0.158	2 3/16	0.180	2 7/16	0.203	2 11/16	0.225	3	0.248	3 1/4	0.270	3 1/2	0.293	3 3/4	0.315	4 1/16	0.338
2.00'	1/4	0.020	1/2	0.040	3/4	0.060	15/16	0.080	1 3/16	0.100	1 7/16	0.120	1 11/16	0.140	1 15/16	0.160	2 3/16	0.180	2 3/8	0.200	2 5/8	0.220	2 7/8	0.240	3 1/8	0.260	3 3/8	0.280	3 5/8	0.300
1.75'	3/16	0.018	7/16	0.035	5/8	0.053	13/16	0.070	1 1/16	0.088	1 1/4	0.105	1 1/2	0.123	1 11/16	0.140	1 7/8	0.158	2 1/8	0.175	2 5/16	0.193	2 1/2	0.210	2 3/4	0.228	2 15/16	0.245	3 1/8	0.263
1.50'	3/16	0.015	3/8	0.030	9/16	0.045	3/4	0.060	7/8	0.075	1 1/16	0.090	1 1/4	0.105	1 7/16	0.120	1 5/8	0.135	1 13/16	0.150	2	0.165	2 3/16	0.180	2 5/16	0.195	2 1/2	0.210	2 11/16	0.225

DIFFERENCE IN ELEVATION BETWEEN LINES OF ENVIRO-SEPTIC® PIPE IN FRACTIONAL INCHES AND DECIMAL FEET

Reference: See “Line elevations” p. 16

B

Bacteria Rejuvenation and System Expansion……..……...40
Bacteria rejuvenation description 40
How to rejuvenate bacteria 40
System expansion explanation.....40
Reusing system components.....40
System replacement 41
Basic Serial Distribution 24

C

Combination Serial Distribution 25, 26

D

Definitions of Terms 5
Center-to-center spacing 6
Contour 6
Coupling.....6
D-Box 6
Design daily flow.....6
Distribution box 6
End cap 6
Enviro-Septic® pipe 6
Enviro-Septic® system 7
Fill.....7
Flow equalizer.....7
GPD 7
High and low vents 7
High strength waste 7
IN DOT Specification 23 sand.....7
Infiltrative surface.....7
Line 7
Offset adapter.....7
Raised straight connection 8
Raised U-shaped connection.....8
Section 8
Serial distribution.....8
SHWT 8
Side-slope.....8
Site slope.....8
Slope 8
Smearing 8
Soil 8
Soil material.....9
Soil profile 9
Structure.....9
Subsurface Bed Systems 9
Subsurface onsite system drain.....9
Surface diversion 9
System bed.....9
System sand 9
Design Criteria 15
Horizontal separation distances 15
Line elevations.....16
Line orientation 15
Design criteria (continued)
Longer Enviro-Septic® systems recommended 15
Maximum line lengths.....15
Minimum line lengths: soil classes A-D..15
Owner information on system use and maintenance.....16
Required depth.....15
Septic tank and D-Box elevations 16
Ten foot increments work best 16

E

Effluent Distribution and System Configurations 23
Sloping site restrictions 23
Line orientation 23
Velocity reduction 23
Basic Serial Distribution
Definition 24
Diagram 24
Use restriction 24
Combination Serial Distribution
Definition 25
Use Restiction 25
Flow equalizers required.....25
Loading 25
Section length requirement 25
Diagram 26
Elevated Bed Systems
Definition 32
Diagrams
Site slope of 1/2 to 6%.....32
Site slope of less than 1/2% 32
Multiple Bed Distribution
Definition 27
Flow equalizers required.....27
Loading 27
Bed length requirement.....27
Separation distance 27
Multiple Bed Orientation 27
Diagrams
Soil class A-D.....28
Soil class E-G 28
Subsurface Bed Systems
Diagrams
Site slope less than 1/2% 29
Site slope of 1/2 to 10%.....30
Site slope greater than 10% 31

Elevated Bed Systems.....32
Definition 32
Diagrams
Site slope less than 1/2%.....32
Site slope of 1/2 to 10%.....32

F

Flood Dose System Requirements.....36
Differential venting.....36
Velocity control 36
Velocity reduction.....36
Dose volume 36
Basic serial distribution limit.....36
Combination and multi-bed distribution limit 36

I

Installation, Handling, and Storage Requirements.....17
Backfilling and final grading 22
Backfilling lines.....22
Erosion control.....22
Level line tolerances 21
Line spacers 22
Observation ports.....17
Raised U-shaped connections 21
Site preparation..... 18-21
Diagram.....19
Soil compaction 17
Storage 17
Tree stump removal 21

M

Multiple Bed Distribution.....27, 28

N

Non-Conventional System Configurations 33
Restrictions 33
Design Requirements.....33
Total linear feet requirement.....33
Bed lengths greater than 100'.....33
Raised straight connections.....34
Diagrams
Curves 34
Angles 34
Trapezoids.....35

Q

Quick Reference Guide for Soil Classes A-D..45
Distribution.....45
Exceptions requirement 45
Purpose.....45
System sizing procedure
Task 1 – Linear Footage.....45
Task 2 – Slope.....46
Task 3 – Center to Center Spacing.....46
Task 4 – System Length and Width 47
Task 4 – System Length and Width 48

Quick Reference Guide for Soil Classes A-D (continued) 45
Table A – Linear Footage.....45
Table B – Line Spacing 4 46
Table C - Length and Width...*See* Minimum line lengths: soil classes A-D
Table C – Length and Width 48
Quick Reference Guide for Soil Classes E-G..49
Bed diagrams
Level beds.....54
Sloping beds.....54
Distribution limitation 49
Exceptions requirement 49
Purpose 49
System design procedure
Task 1 – Daily Design Flow 49
Task 2 – System Size 50
Task 3 – Slope.....50
Task 4 – Design Beds 51
Table D – System Sizing Table per Bedroom.....50

R

Requirements
Line.....11
Observation port 11
Site.....11
Soil material cover extensions.....12
Subsurface drain 12
Subsurface drainage system.....12
Surface diversions 12
System side slopes and soil material extensions.....13
Topographic position.....14
Tree stump removal.....14
Venting 14
Restrictions
Bed design – soil classes E-G.....10
Converging flows 11
Non-conventional system configuration...11
Soil classes
Class A.....12
Class E-G 12
Soil moisture construction.....12
System site.....14
Slope Design Chart.....64

S

Soil Classes.....42
Class A restriction 42
Dispersal area requirements.....43, 44
Elevated bed system considerations 43
Subsurface bed system considerations 43

Specifications
Design daily flow.....11
Loading limit.....11
System bed dimension 13
System sand 13
Specifications, Requirements, and Restrictions 10
Subsurface Bed Systems 29, 30, 31
System advantages 1
System components 17
System Installation Form……..…Appendix A

T

Tables
Dispersal Area Width E-G Soils 44
Elevation difference between lines on sloping sites 64
Soil Classes for Onsite Systems.....42
Tables (continued)
Table A - Linear Footage.....45
Table B - Line Spacing.....46
Table C - Length and Width 48
Table D - System Sizing Table (Soil Classes E-G)……...50
Technical support 4

V

Venting Requirements 37
General rule 37
When to vent.....37
Differential venting.....37
Vent locations.....37, 38
Vent manifolds 38
Vent piping slope.....39

Appendix A - System Installation Form

By Indiana law, for each new or replacement installation, Indiana State installers of Enviro-Septic® systems must complete and fax or mail a copy of this form to

Presby Environmental, Inc.
143 Airport Road
Whitefield, NH 03598
Fax: (603) 837-9864

Installer's Name:		
Company Name:		
Street Address:		
City:	State:	Zip:
Property Owner:		
Site Street Address:		
City:	State:	Zip:
Soil Class:	Number of bedrooms/GPD flow	
Date Installation completed:		
Permit Number:	Presby Environmental, Inc. Certification Number:	
Comments:		

This form may also be completed online at
presbyenvironmental.com/state approvals/indiana/system installation form

Appendix A - System Installation Form

By Indiana law, for each new or replacement installation, Indiana State installers of Enviro-Septic® systems must complete and fax or mail a copy of this form to

Presby Environmental, Inc.
143 Airport Road
Whitefield, NH 03598
Fax: (603) 837-9864

Installer's Name:		
Company Name:		
Street Address:		
City:	State:	Zip:
Property Owner:		
Site Street Address:		
City:	State:	Zip:
Soil Class:	Number of bedrooms/GPD flow	
Date Installation completed:		
Permit Number:	Presby Environmental, Inc. Certification Number:	
Comments:		

This form may also be completed online at
presbyenvironmental.com/state approvals/indiana/system installation form

Appendix B – Enviro-Septic® Wastewater Treatment System Operating Manual

Introduction

Enviro-Septic® wastewater treatment systems are virtually maintenance free. However, an awareness of system abuse and simple easy maintenance will guarantee system longevity.

System abuse conditions

The following conditions constitute system abuse.

- Liquid in high volume (excessive number of occupants, leaking fixtures, whirlpool tubs, hot tubs, water softening equipment or additional water discharging fixtures if not specified in system design).
- Solids in high volume (excessive number of occupants, paper products, personal hygiene products, garbage disposals or water softening equipment if not specified in system design)
- Antibiotic medicines in high concentrations
- Cleaning products in high concentrations
- Fertilizers or other caustic chemicals in any amount
- Petroleum products in any amount
- Latex and oil paints

Special Note: Presby Environmental, Inc., and the state of Indiana do not recommend the use of septic system additives.

System maintenance

These simple procedures will guarantee system longevity.

- Inspect the septic tank at least once every two years under normal usage. Have the tank emptied when surface scum and bottom sludge occupy one-fourth or more of tank capacity.
- After pumping, inspect the septic tank for integrity to ensure that no groundwater flow is entering it. Also check the integrity of the tank inlet and outlet baffles.
- Inspect the system to ensure that vents are in place and free of obstructions.

Site maintenance

It is important that the system site remain free of shrubs, trees, and other woody vegetation to within a minimum of 10’ feet.

ENVIRO-SEPTIC® WASTEWATER TREATMENT SYSTEM

Nine Stages of treatment: Enviro-Septic treats effluent more efficiently to provide longer system life and to protect our environment.

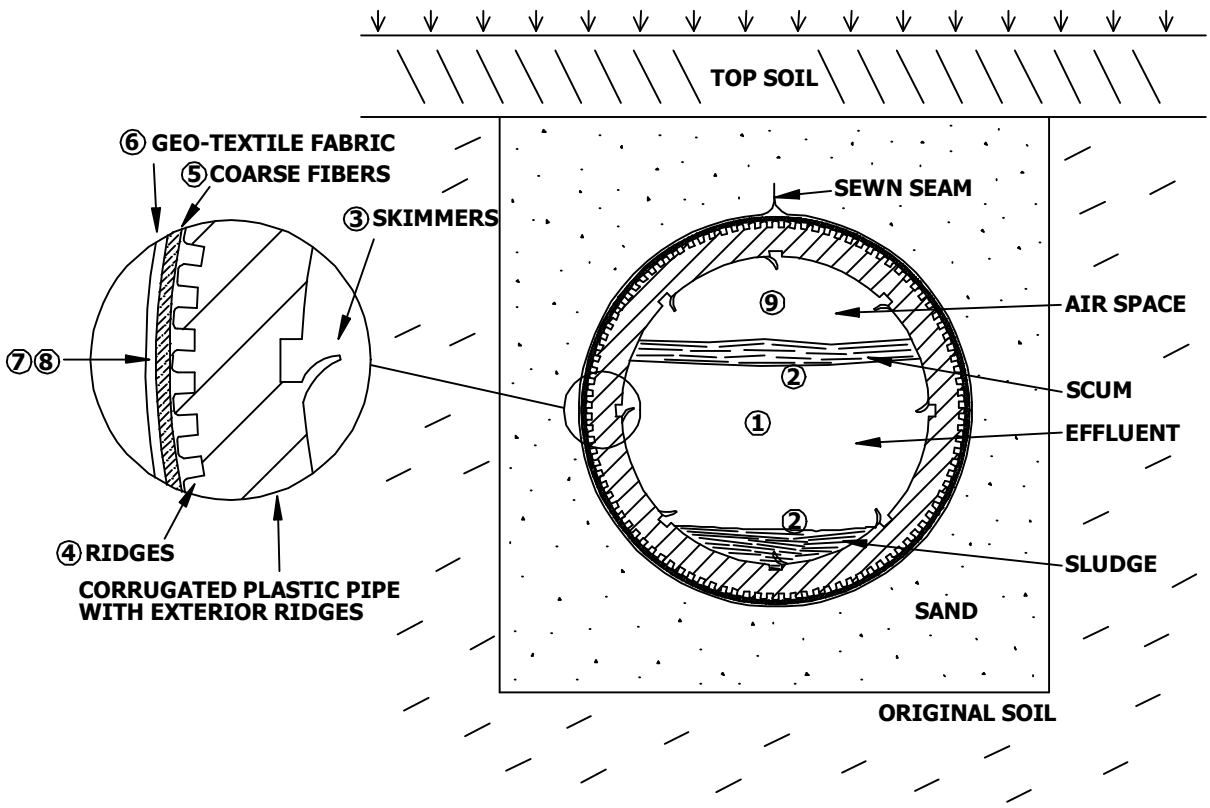

Stage 1: Warm effluent enters the pipe and is cooled to ground temperature.
Stage 2: Suspended solids separate from the cooled liquid effluent.
Stage 3: Skimmers further capture grease and suspended solids from the effluent as it exits through the perforations in the pipe.
Stage 4: Pipe ridges allow the effluent to flow uninterrupted around the circumference of the pipe and aid in cooling.
Stage 5: A mat of random, coarse fibers further separates more suspended solids from the effluent.
Stage 6: Effluent passes into the geo-textile fabric and grows a protected bacterial surface.
Stage 7: Sand wicks the treated effluent from the geo-textile fabric and enables air to transfer to the bacterial surface.
Stage 8: The fabric and fibers provide a large bacterial surface to break down solids.
Stage 9: An ample air supply and fluctuating effluent levels increase bacterial efficiency.