PROJECT	DESIGNATION
HCHD PB-13-0004	
	BRIDGE FILE
	HAMILTION 304

HAMILTON COUNTY

REPLACEMENT PLAN FOR
SS#32059 (BRIDGE 304)
CAL CARSON ROAD/TAYLOR DITCH

JACKSON TOWNSHIP
HAMILTON COUNTY, INDIANA
HCHD PB-13-0004

TRAFFIC DATA		CAL CARSON ROAD
A.A.D.T.	2016	523 V.P.D.
A.A.D.T. PROJECTED	2036	493 V.P.D.
DESIGN DATA		
DESIGN SPEED		55 M.P.H.
PROJECT DESIGN CRITERIA		3 R
FUNCTIONAL CLASSIFICATION		COLLECTOR
RURAL/URBAN		RURAL
TERRAIN		LEVEL
ACCESS CONTROL		NONE
REGULATED DRAIN		YES – OPEN STREAM

INDEX

STRUCTURE	TYPE	SPAN AND SKEW	OVER	STATION
HAMILTON BRIDGE 304	CONTINUOUS REINFORCED CONCRETE SLAB BRIDGE	3 SPAN 20'–0", 26'–0", 20'–0" SKEW 20°00'00" LT.	TAYLOR DITCH	℄ STRUCTURE 55+94.00 LINE 'B'

SHEET NO.	SUBJECT
1	TITLE SHEET
2	TYPICAL SECTIONS
3	MAINTENANCE OF TRAFFIC
4–6	PLAN AND PROFILE
7–8	EROSION CONTROL DETAILS
9	LAYOUT
10–11	GENERAL PLANS
12–14	BENT DETAILS
15–16	FLOOR DETAILS
17	APPROACH SLAB
18	SUMMARY OF BRIDGE QUANTITIES
19	MISCELLANEOUS TABLES
	CROSS SECTIONS
20–28	LINE 'B'

UTILITY CONTACT INFORMATION

ELECTRIC	TELEPHONE
DUKE ENERGY 100 SOUTH MILLCREEK ROAD NOBLESVILLE, IN 46062 CINDY ROWLAND (317) 776–5341 CINDY.ROWLAND@DUKEENERGY.COM	FRONTIER COMMUNCATIONS 20905 HAGUE ROAD NOBLESVILLE, IN 46060 STEVE COSTLOW (317) 984–9010 STEVE.COSTLOW@FTR.COM
COMMUNICATIONS	
AT&T 116 E. TAYLOR ST. KOKOMO, IN 46901 CURTIS MILLER (765) 454–4054 CM5432@ATT.COM	

SMALL STRUCTURE #32059 IS LOCATED APPROXIMATELY 460 FEET NORTH OF THE INTERSECTION OF 256TH STREET AND CAL CARSON ROAD OVER TAYLOR DITCH, IN THE ARCADIA USGS QUADRANGLE, SECTIONS 20 AND 21, TOWNSHIP 20 NORTH, RANGE 4 EAST, AND ALL WITHIN JACKSON TOWNSHIP, HAMILTON COUNTY, INDIANA.

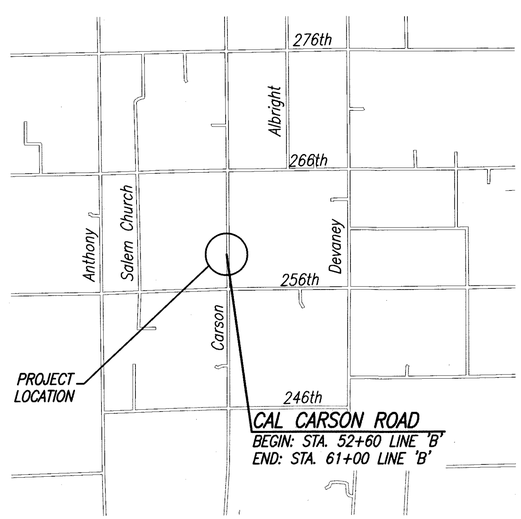

LOCATION MAP
HAMILTON COUNTY
NOT TO SCALE

LEGEND

EXISTING		PROPOSED
	CONIFEROUS TREE	
	DECIDUOUS TREE	
	SHRUB	
	TREE LINE	
	STREAM/DITCH	
	SIGN	
	POWER POLE	
	UTILITY POLE	
	GUARDRAIL	
200	CONTOUR	200
G	UNDERGROUND GAS	
CATV	UNDERGROUND CABLE	
BT	UNDERGROUND TELEPHONE	
X	FENCE	X

REVISIONS

DATE	SHEET NO.

SCALES:

PLAN 20 10 0 20 40 — SCALE: 1" = 20'

PROFILE HORIZ. 20 10 0 20 40 — SCALE: 1" = 20'

PROFILE VERT. 5 2.5 0 5 10 — SCALE: 1" = 5'

LAYOUT 30 15 0 30 60 — SCALE: 1" = 30'

FULL SIZE PLANS HAVE BEEN PREPARED USING STANDARD ENGINEERING SCALES. REDUCED SIZED PLANS WILL NOT CONFORM TO STANDARD SCALES. IN MAKING MEASUREMENTS ON REDUCED PLANS, THE ABOVE SCALES MAY BE USED.

APPROVED BY:
HAMILTON COUNTY BOARD OF COMMISSIONERS

STEVEN C. DILLINGER, PRESIDENT

CHRISTINE ALTMAN, MEMBER

MARK HEIRBRANDT, MEMBER

ATTEST: Dawn Coverdale
DAWN COVERDALE, COUNTY AUDITOR

DATE: 7-25-2016

RECOMMENDED FOR APPROVAL: Bradley Davis P.E.
for JOEL B. THURMAN, P.E. ACTING COUNTY ENGINEER

DATE: July 25, 2016

INDIANA DEPARTMENT OF TRANSPORTATION STANDARD SPECIFICATIONS DATED 2014 TO BE USED WITH THESE PLANS.

DLZ PROJECT NO. 1363–0915–90

CERTIFIED BY: Amy K. Fisk

CERTIFIED THIS DATE: 06/30/2016

AMY K. FISK REGISTERED No. 8803383 STATE OF INDIANA PROFESSIONAL ENGINEER — DLZ INDIANA, LLC

CERTIFIED BY: Michael A. Kummeth

CERTIFIED THIS DATE: 6/30/2016

MICHAEL A. KUMMETH REGISTERED No. 910382 STATE OF INDIANA PROFESSIONAL ENGINEER — DLZ INDIANA, LLC

CERTIFIED BY: Faisal Saleem

CERTIFIED THIS DATE: 07-25-16

FAISAL SALEEM REGISTERED No. 10707439 STATE OF INDIANA PROFESSIONAL ENGINEER — DLZ INDIANA, LLC

PLANS PREPARED BY:
DLZ
157 EAST MARYLAND STREET
INDIANAPOLIS, INDIANA 46204
PHONE: (317) 633–4120
FAX: (317) 633–4177

Date: Jun 24, 2016, 12:42pm User ID: vdoolyiev
File: M:\PROJ\1363\0915 – Hamilton Co. 32059\Civil\DWG\0915CV11.dwg Model Tab: Plan Set

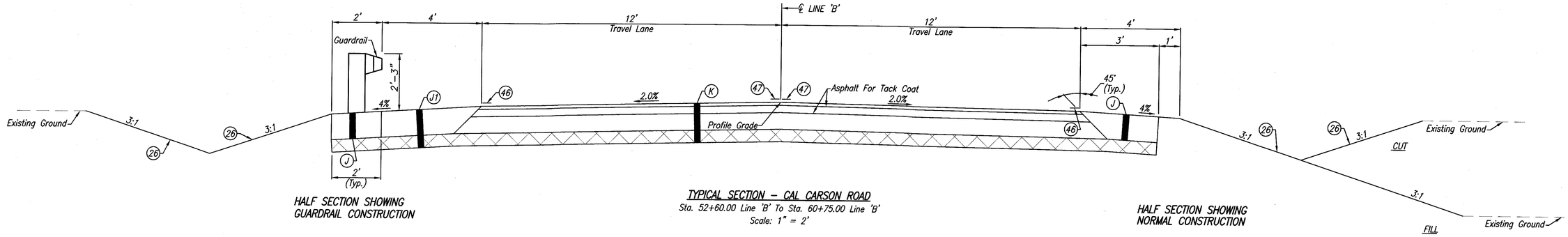

HALF SECTION SHOWING GUARDRAIL CONSTRUCTION

TYPICAL SECTION – CAL CARSON ROAD
Sta. 52+60.00 Line 'B' To Sta. 60+75.00 Line 'B'
Scale: 1" = 2'

HALF SECTION SHOWING NORMAL CONSTRUCTION

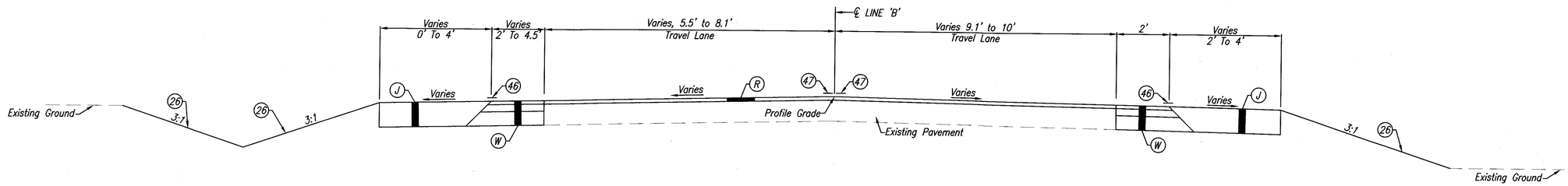

TYPICAL SECTION – INCIDENTAL CONSTRUCTION
Sta. 51+60.00 Line 'B' To Sta. 52+60.00 Line 'B'
Sta. 60+75.00 Line 'B' To Sta. 61+85.00 Line 'B'
Scale: 1" = 2'

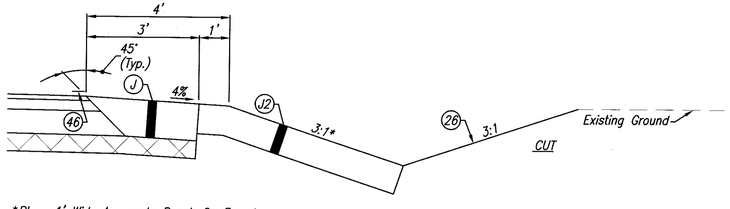

*Place 1' Wide Aggregate Bench On Foreslopes Every 100' Throughout The Project Limits Or As Directed By Engineer.

AGGREGATE BENCH
Scale: 1" = 2'

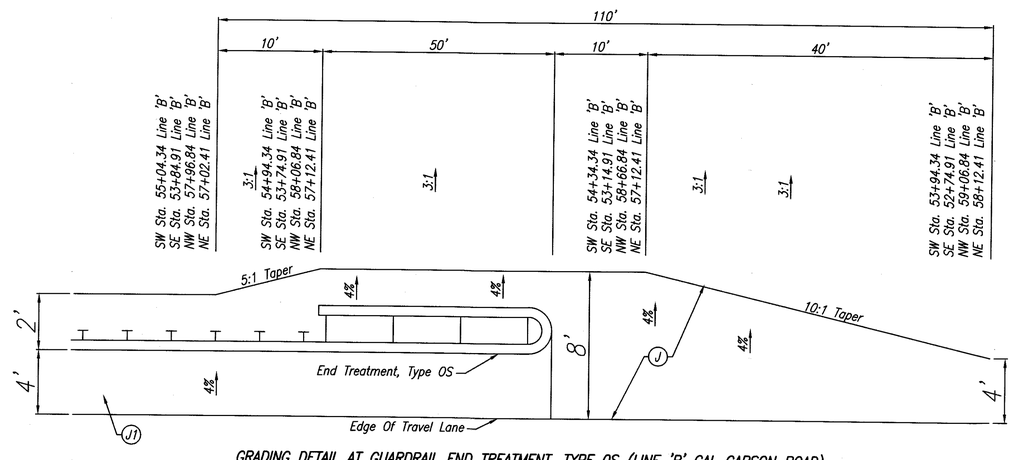

GRADING DETAIL AT GUARDRAIL END TREATMENT, TYPE OS (LINE 'B' CAL CARSON ROAD)
NOT TO SCALE

LEGEND

- (26) Seed Mixture, R, With Erosion Control Blanket
- (46) Line, Thermoplastic, Solid, White, 4"
- (47) Line, Thermoplastic, Solid, Yellow, 4"
- (J) Aggregate Shoulder
  10.5" Compacted Aggregate, No. 53
- (J1) HMA Shoulder To Be:
  165#/SYD HMA, Surface Type B, On
  330#/SYD HMA, Intermediate Type B, On
  660#/SYD HMA, Base Type B, On
  Subgrade Treatment, Type II
- (J2) Aggregate Bench
  10.5" Compacted Aggregate, No. 53
- (K) HMA Pavement To Be:
  165#/SYD HMA, Surface Type B, On
  330#/SYD HMA, Intermediate Type B, On
  660#/SYD HMA, Base Type B, On
  Subgrade Treatment, Type II
- (R) 165#/SYD, HMA Surface Type B, On
  Milling, Asphalt, 1 1/2"
- (W) Widening With HMA, Type B To Be:
  165#/SYD HMA, Surface, Type B, On
  330#/SYD HMA, Intermediate, Type B, On
  660#/SYD HMA, Base, Type B, On
  Subgrade Treatment, Type II

DLZ

FAISAL SALEEM REGISTERED No. 10707439 STATE OF IND IANA PROFESSIONAL ENGINEER
DLZ INDIANA, LLC

RECOMMENDED FOR APPROVAL — DESIGN ENGINEER — DATE 07-26-16

DESIGNED: CAP | DRAWN: CJS
CHECKED: FS | CHECKED: FS

HAMILTON COUNTY HIGHWAY DEPARTMENT

TYPICAL SECTIONS
CAL CARSON ROAD

HORIZONTAL SCALE	BRIDGE FILE
AS SHOWN	HAMILTON 304
VERTICAL SCALE	DESIGNATION

SURVEY BOOK	SHEETS
ELECTRONIC	2 of 28
CONTRACT	PROJECT
–	HCHD PB-13-0004

Date: Jul 26, 2016, 3:47pm User ID: thill
File: M:\PROJ\1383\0915 – hamilton ss 32028 & 32059\Civil\DWG\0915TS11.dwg Model Tab: Plan Set

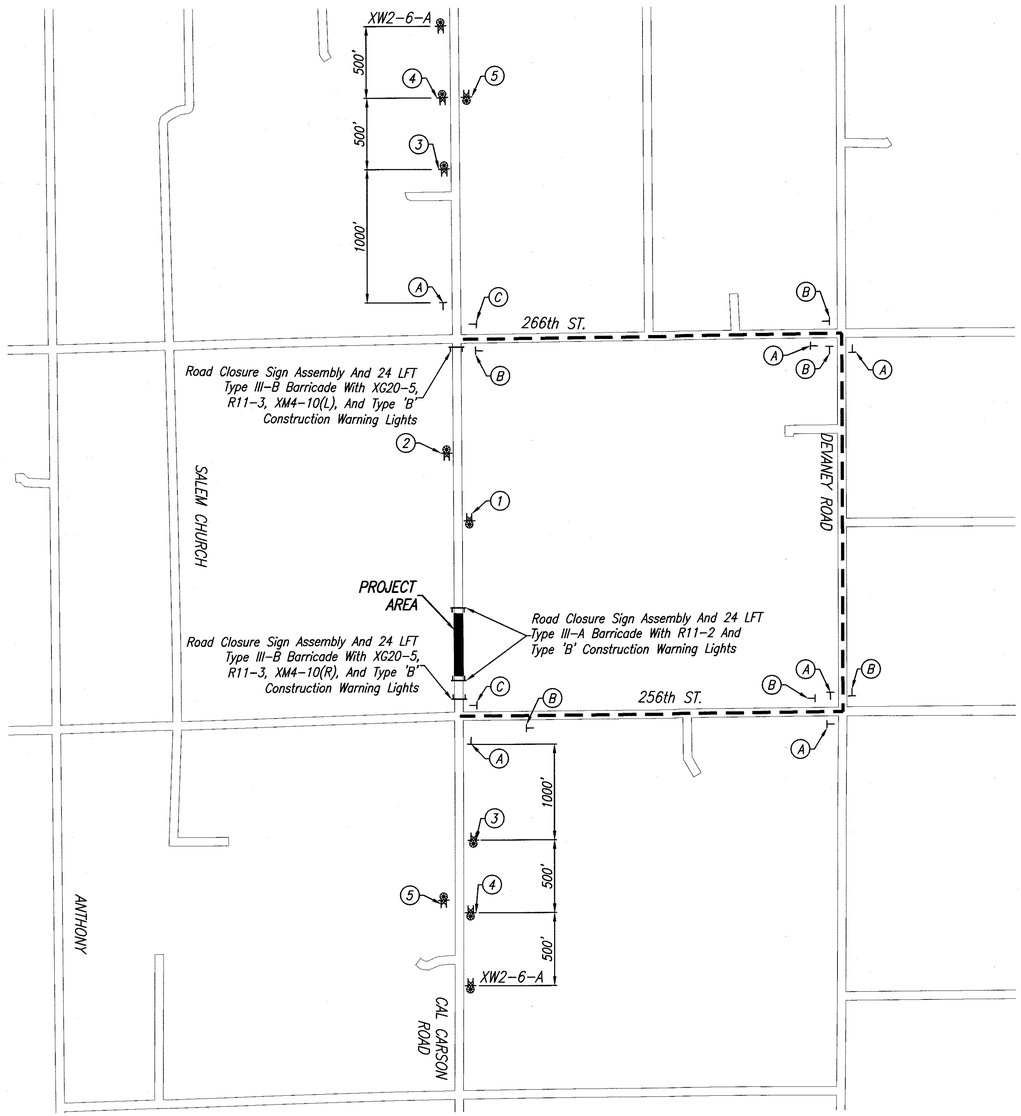

DETOUR PLAN

NOTE: EXACT SIGN LOCATIONS TO BE FIELD DETERMINED.

DETOUR ROUTE MARKER ASSEMBLY

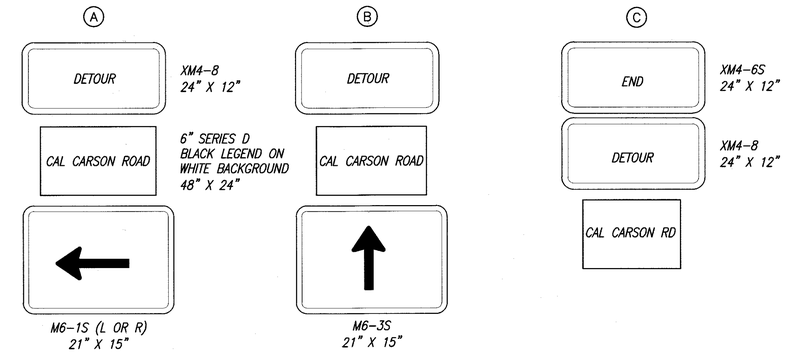

CONSTRUCTION SIGNS, TYPE "A"

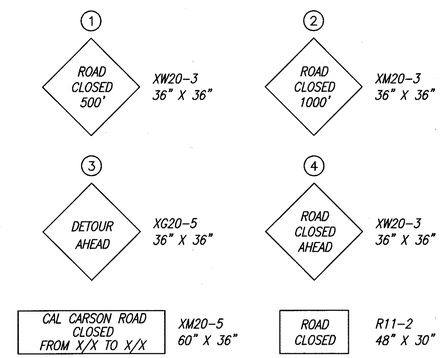

CONSTRUCTION SIGNS, TYPE "B"

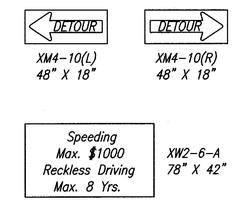

LEGEND

- Type III-A Or III-B Barricade
- Type "A" Construction Warning Light
- Road Closure Sign Assembly
- Detour Route Marker Assembly
- Local Detour Route
- Project Area

NOTES

1. All Signs, Barricades, And Pavement Markings Shall Conform To The Indiana Manual On Traffic Control Devices For Streets And Highways, 2011 And Any Current Supplements Thereto.
2. Contractor Shall Maintain Access To All Commercial And Private Properties During Construction.

TABLE OF QUANTITIES

ITEM	TOTAL
CONSTRUCTION SIGNS, TYPE "A"	14 EACH
CONSTRUCTION SIGNS, TYPE "B"	2 EACH
CONSTRUCTION SIGNS, TYPE "C"	2 EACH
STANDARD BARRICADE, TYPE III-A	48 LFT
STANDARD BARRICADE, TYPE III-B	48 LFT
DETOUR ROUTE MARKER ASSEMBLY	14 EACH
ROAD CLOSURE SIGN ASSEMBLY	4 EACH

DLZ

FAISAL SALEEM REGISTERED No. 10707439 STATE OF INDIANA PROFESSIONAL ENGINEER
DLZ INDIANA, LLC

RECOMMENDED FOR APPROVAL — DESIGN ENGINEER — DATE 07-26-16

DESIGNED: CAP | DRAWN: CJS
CHECKED: FS | CHECKED: FS

HAMILTON COUNTY HIGHWAY DEPARTMENT

MAINTENANCE OF TRAFFIC
DETOUR MAP – CAL CARSON ROAD

HORIZONTAL SCALE	BRIDGE FILE
NOT TO SCALE	HAMILTON 304
VERTICAL SCALE	DESIGNATION
SURVEY BOOK	SHEETS
ELECTRONIC	3 of 28
CONTRACT	PROJECT
–	HCHD PB-13-0004

Date: Apr 21, 2016, 1:07pm User ID: thill
File: M:\PROJ\1363\0915 – Hamilton SS 32028 & 32059\Civil\DWG\0915MT11.dwg Model Tab: Plan Set

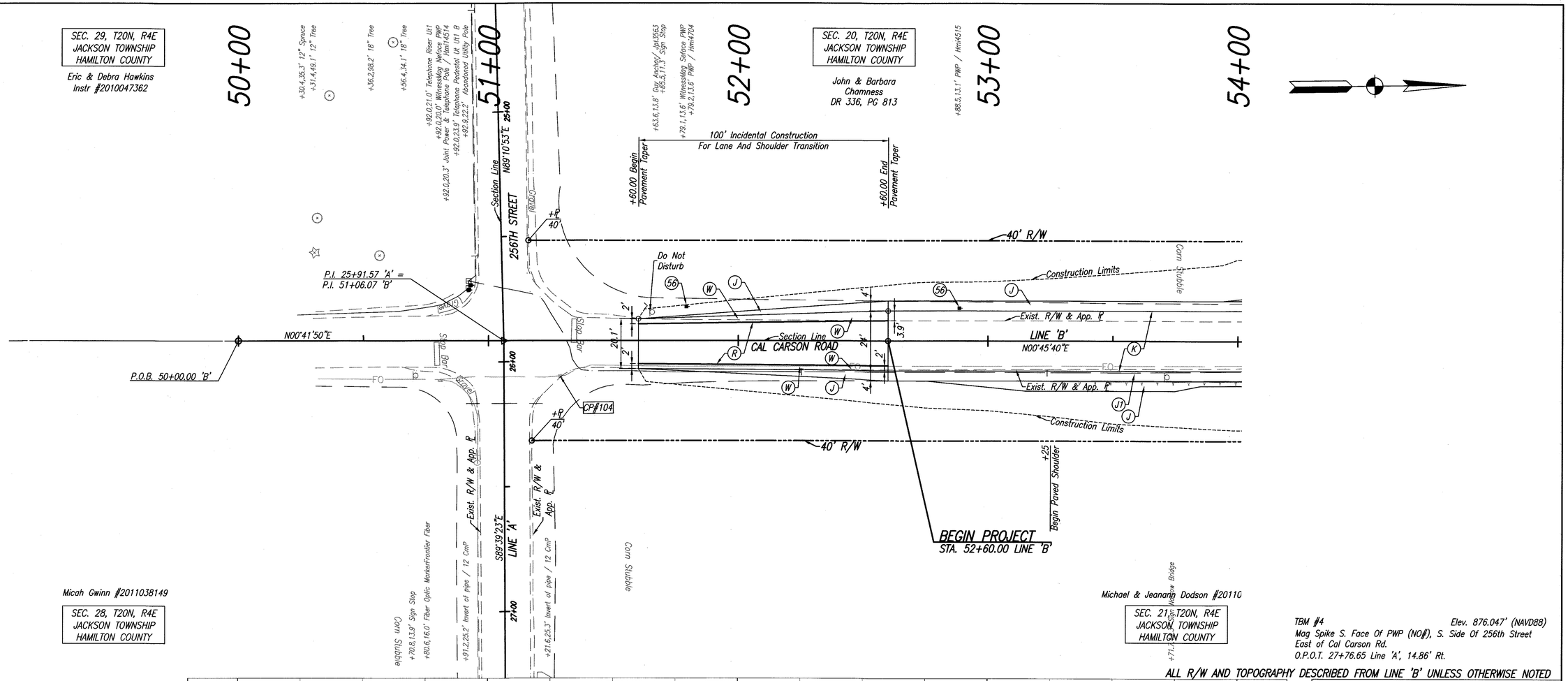

TBM #4 Elev. 876.047' (NAVD88)
Mag Spike S. Face Of PWP (NO#), S. Side Of 256th Street
East of Cal Carson Rd.
O.P.O.T. 27+76.65 Line 'A', 14.86' Rt.

ALL R/W AND TOPOGRAPHY DESCRIBED FROM LINE 'B' UNLESS OTHERWISE NOTED

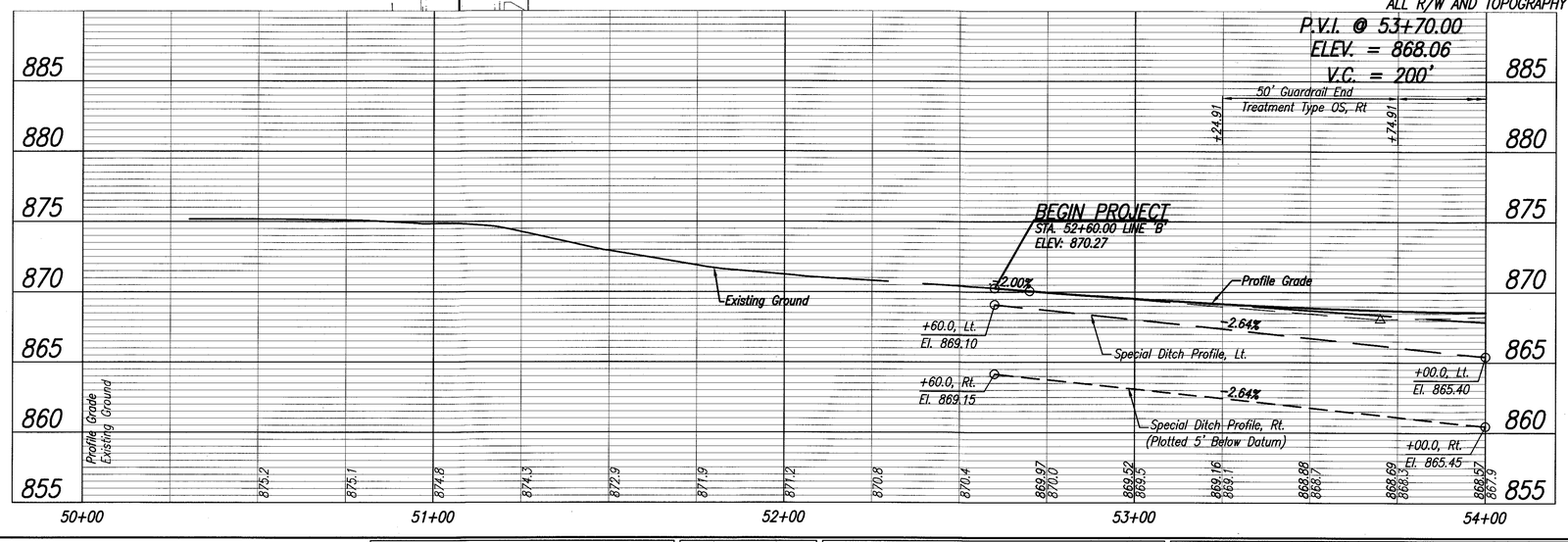

LEGEND

- (56) Relocated By Others
- (J) Aggregate Shoulder
  10.5" Compacted Aggregate, No. 53
- (J1) HMA Shoulder To Be:
  165#/SYD HMA, Surface Type B, On
  330#/SYD HMA, Intermediate Type B, On
  660#/SYD HMA, Base Type B, On
  Subgrade Treatment, Type II
- (K) HMA Pavement To Be:
  165#/SYD HMA, Surface Type B, On
  330#/SYD HMA, Intermediate Type B, On
  660#/SYD HMA, Base Type B, On
  Subgrade Treatment, Type II
- (M) HMA For Approaches To Be:
  165#/SYD HMA, Surface, Type B, On
  385#/SYD HMA, Intermediate, Type B, On
  Subgrade Treatment, Type II
- (R) 165#/SYD, HMA Surface Type B, On
  Milling, Asphalt, 1 1/2"
- (W) Widening With HMA, Type B To Be:
  165#/SYD HMA, Surface, Type B, On
  330#/SYD HMA, Intermediate, Type B, On
  660#/SYD HMA, Base, Type B, On
  Subgrade Treatment, Type II

104 N=210177.3825 E=1789772.0435
Mag Nail S.E. Face of PW.P. #HM14704
LINE "A" 256th Street
PK Nail N.E. Face of PW.P. #HM14514
E. Flange, "STOP" Sign Post
MAG SPIKE SET FLUSH Elev=
O.P.O.T. Sta 26+06.08, 22.59' Lt, Line "A" =
O.P.O.T. Sta 51+28.77, 14.35' Rt, Line "B"

DLZ

FAISAL SALEEM REGISTERED No. 10707439 STATE OF INDIANA PROFESSIONAL ENGINEER
DLZ INDIANA, LLC

RECOMMENDED FOR APPROVAL — DESIGN ENGINEER — DATE 07-26-16

DESIGNED: CAP DRAWN: CJS
CHECKED: FS CHECKED: FS

HAMILTON COUNTY HIGHWAY DEPARTMENT

PLAN AND PROFILE LINE 'B'

HORIZONTAL SCALE	BRIDGE FILE
1" = 20'	HAMILTON 304
VERTICAL SCALE	DESIGNATION
1" = 5'	

SURVEY BOOK	SHEETS
ELECTRONIC	4 of 28
CONTRACT	PROJECT
–	HCHD PB-13-0004

Date: Apr 21, 2016, 1:08pm User ID: thill
File: M:\PROJ\1383\0915 - Hamilton SS 32028 & 32059\Civil\DWG\VFG - Line B - (6) - (9).dwg Model Tab: P&P Sheet - (17)

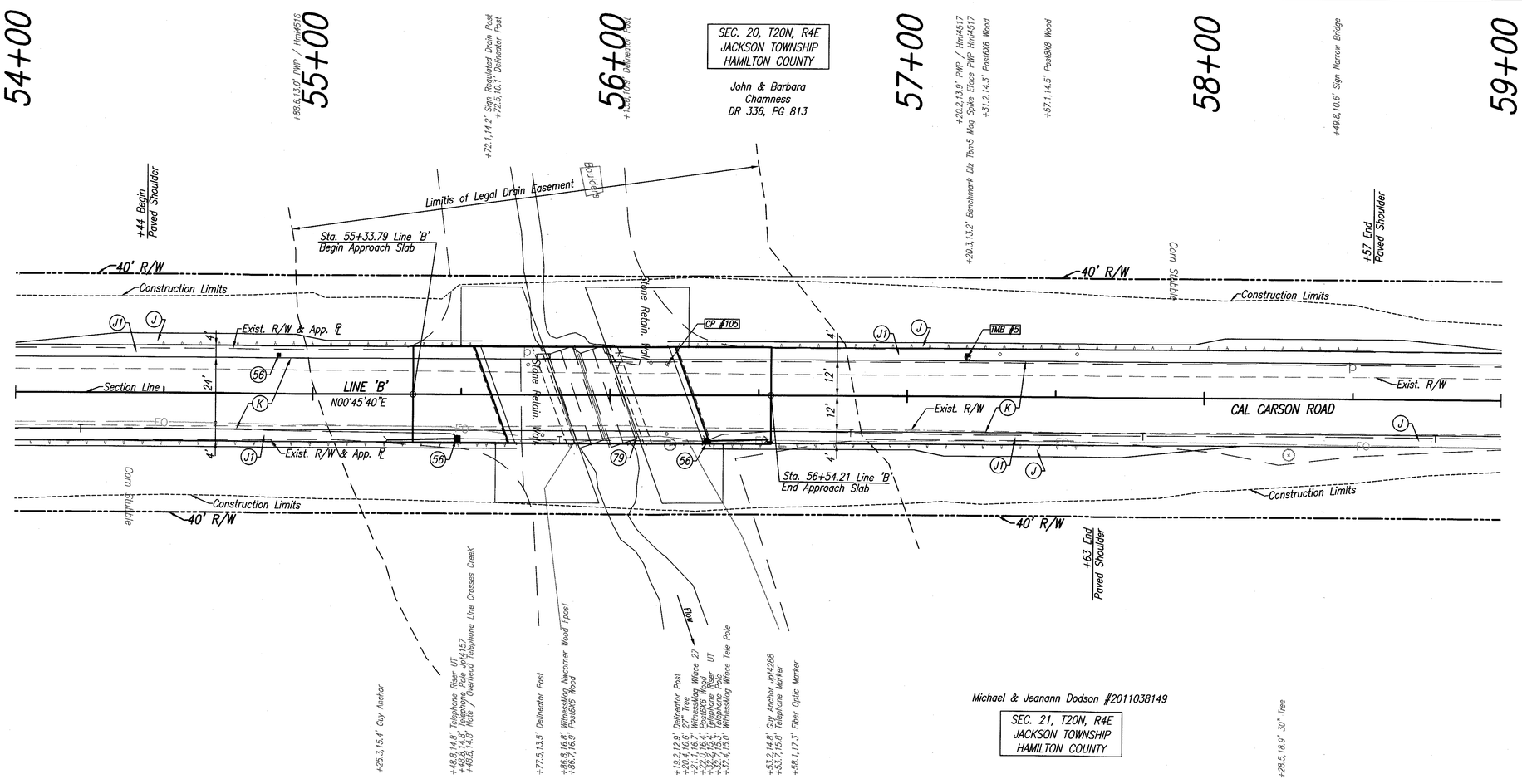

TBM #5 Elev. 865.607' (NAVD88)
Mag Spike E. Face Of PWP (#HMI 4517), W. Side Of Cal Carson Rd. +/- 125' N Of Creek
O.P.O.T. 57+20.27 Line 'B', 13.2' Lt.

ALL R/W AND TOPOGRAPHY DESCRIBED FROM LINE 'B' UNLESS OTHERWISE NOTED

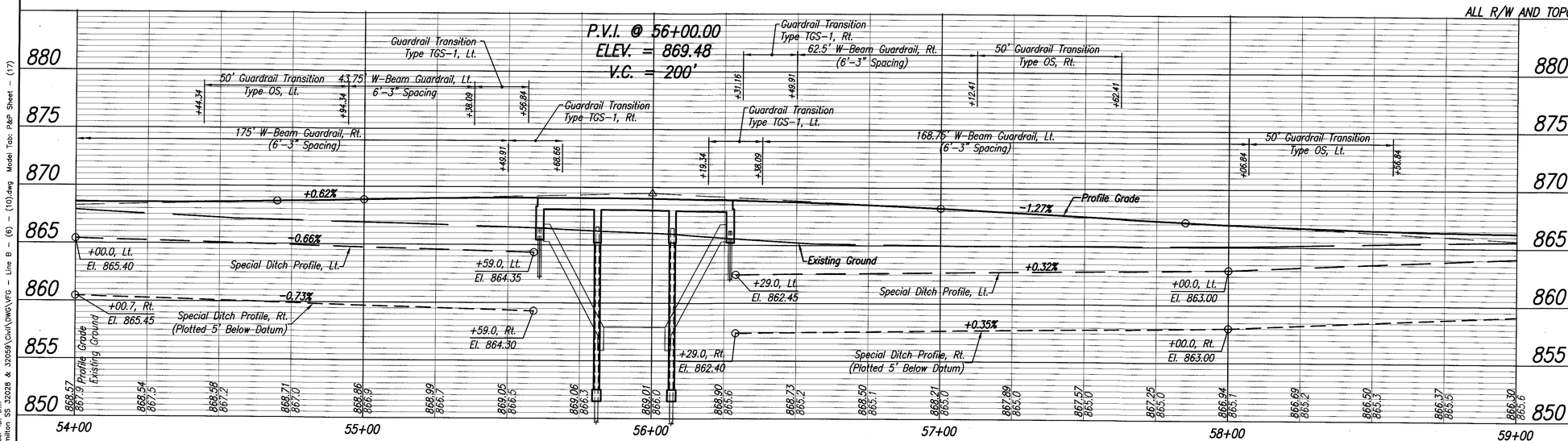

LEGEND

- (56) Relocated By Others
- (79) Structure, Remove
- (J) Aggregate Shoulder
  10.5" Compacted Aggregate, No. 53
- (J1) HMA Shoulder To Be:
  165#/SYD HMA, Surface Type B, On
  330#/SYD HMA, Intermediate Type B, On
  660#/SYD HMA, Base Type B, On
  Subgrade Treatment, Type II
- (K) HMA Pavement To Be:
  165#/SYD HMA, Surface Type B, On
  330#/SYD HMA, Intermediate Type B, On
  660#/SYD HMA, Base Type B, On
  Subgrade Treatment, Type II
- (M) HMA For Approaches To Be:
  165#/SYD HMA, Surface, Type B, On
  385#/SYD HMA, Intermediate, Type B, On
  Subgrade Treatment, Type II
- (R) 165#/SYD, HMA Surface Type B, On
  Milling, Asphalt, 1 1/2"
- (W) Widening With HMA, Type B To Be:
  165#/SYD HMA, Surface, Type B, On
  330#/SYD HMA, Intermediate, Type B, On
  660#/SYD HMA, Base, Type B, On
  Subgrade Treatment, Type II

105 N=210158.9717 E=1790262.9326

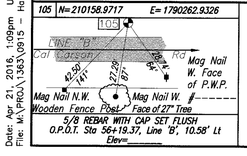

DLZ

FAISAL SALEEM REGISTERED No. 10707439 STATE OF INDIANA PROFESSIONAL ENGINEER
DLZ INDIANA, LLC

RECOMMENDED FOR APPROVAL _____ DESIGN ENGINEER 07-26-16 DATE

DESIGNED: FS DRAWN: CJS
CHECKED: FS CHECKED: FS

HAMILTON COUNTY HIGHWAY DEPARTMENT

PLAN AND PROFILE LINE 'B'

HORIZONTAL SCALE	BRIDGE FILE
1" = 20'	HAMILTON 304
VERTICAL SCALE	DESIGNATION
1" = 5'	
SURVEY BOOK	SHEETS
ELECTRONIC	5 of 28
CONTRACT	PROJECT
–	HCHD PB-13-0004

Date: Apr 21, 2016, 1:09pm User ID: thill
File: M:\PROJ\1363\0915 - Hamilton SS 32028 & 32059\Civil\DWG\VFG - Line B - (6) - (10).dwg Model Tab: P&P Sheet - (17)

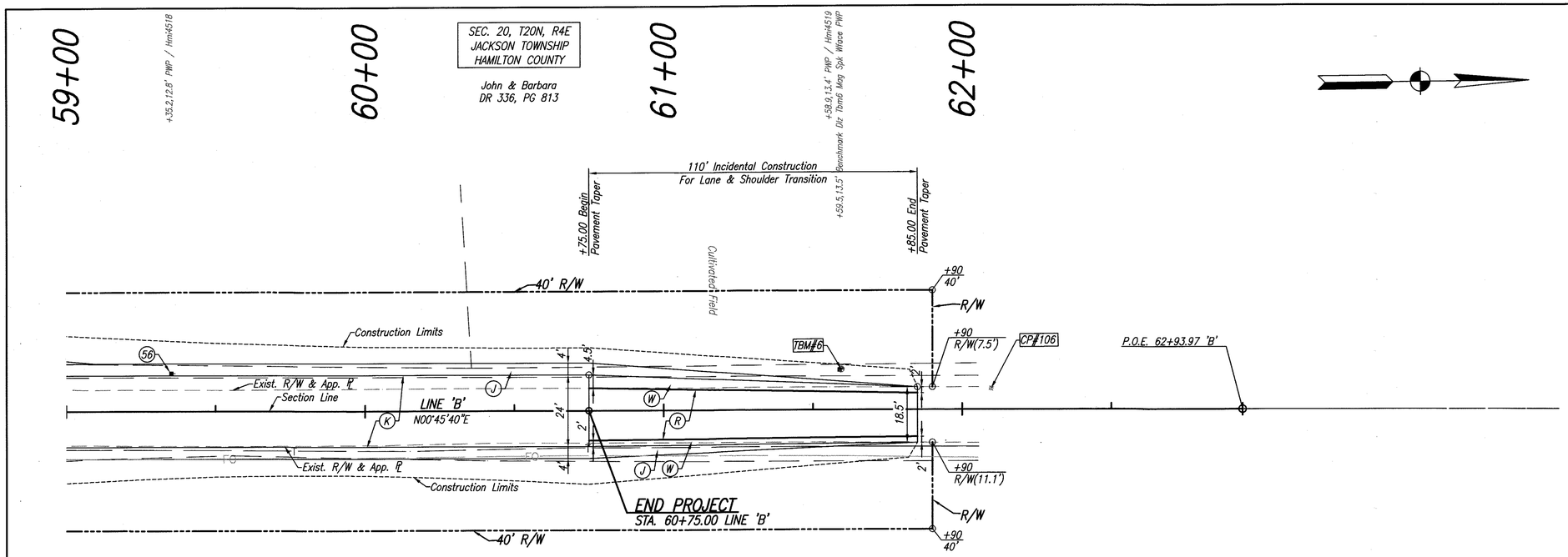

Michael & Jeanann Dodson #2011038149

SEC. 21, T20N, R4E
JACKSON TOWNSHIP
HAMILTON COUNTY

TBM #6 Elev. 870.162' (NAVD88)
Mag Spike W. Face Of PWP (#HMI 4519), W. Side Of Cal Carson Rd. +/- 565' N Of Creek
O.P.O.T. 61+59.5 line 'B', 13.5' Lt.

ALL R/W AND TOPOGRAPHY DESCRIBED FROM LINE 'B' UNLESS OTHERWISE NOTED

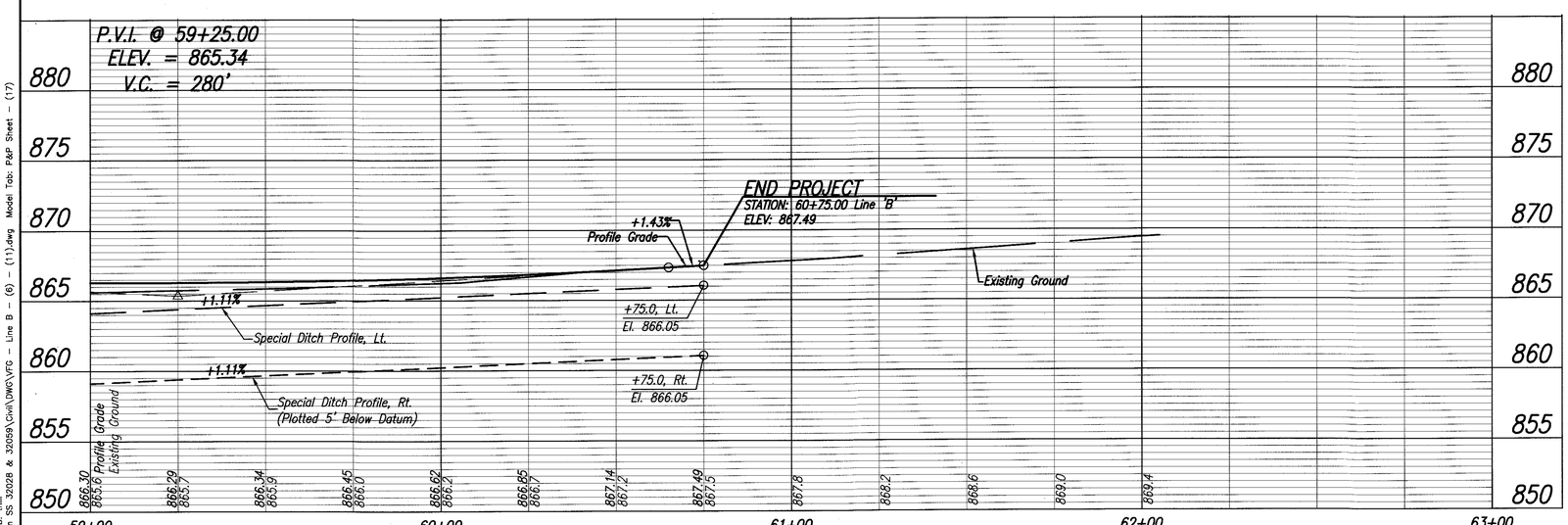

LEGEND

- (56) Relocated By Others
- (J) Aggregate Shoulder
  10.5" Compacted Aggregate, No. 53
- (J1) HMA Shoulder To Be:
  165#/SYD HMA, Surface Type B, On
  330#/SYD HMA, Intermediate Type B, On
  660#/SYD HMA, Base Type B, On
  Subgrade Treatment, Type II
- (K) HMA Pavement To Be:
  165#/SYD HMA, Surface Type B, On
  330#/SYD HMA, Intermediate Type B, On
  660#/SYD HMA, Base Type B, On
  Subgrade Treatment, Type II
- (M) HMA For Approaches To Be:
  165#/SYD HMA, Surface, Type B, On
  385#/SYD HMA, Intermediate, Type B, On
  Subgrade Treatment, Type II
- (R) 165#/SYD, HMA Surface Type B, On
  Milling, Asphalt, 1 1/2"
- (W) Widening With HMA, Type B To Be:
  165#/SYD HMA, Surface, Type B, On
  330#/SYD HMA, Intermediate, Type B, On
  660#/SYD HMA, Base, Type B, On
  Subgrade Treatment, Type II

106 N=210170.6425 E=1790853.2097

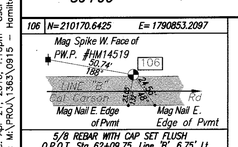

5/8 REBAR WITH CAP SET FLUSH
O.P.O.T. Sta 62+09.75, Line 'B', 6.75' Lt
Elev.

DLZ

FAISAL SALEEM
REGISTERED
No. 10707439
STATE OF INDIANA
PROFESSIONAL ENGINEER
DLZ INDIANA, LLC

RECOMMENDED FOR APPROVAL — DESIGN ENGINEER — DATE 07-26-16

DESIGNED: CAP DRAWN: CJS
CHECKED: FS CHECKED: FS

HAMILTON COUNTY HIGHWAY DEPARTMENT

PLAN AND PROFILE LINE 'B'

HORIZONTAL SCALE	BRIDGE FILE
1" = 20'	HAMILTON 304
VERTICAL SCALE	DESIGNATION
1" = 5'	
SURVEY BOOK	SHEETS
ELECTRONIC	6 of 28
CONTRACT	PROJECT
–	HCHD PB-13-0004

Date: Apr 21, 2016, 1:10pm User ID: thill
File: M:\PROJ\1363\0915 – Hamilton SS 32028 & 32059\Civil\DWG\VFG – Line B – (6) – (11).dwg Model Tab: P&P Sheet – (17)

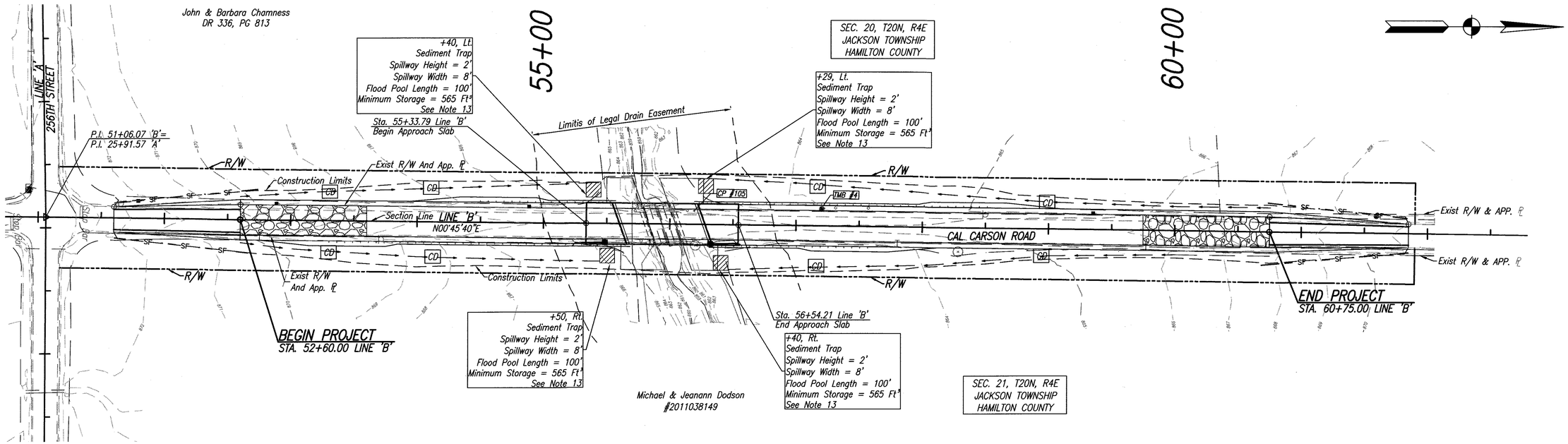

EROSION CONTROL TABLE

LOCATION					DITCH INLET PROTECTION	PERIMETER PROTECTION	REVETMENT RIP RAP		
							GEOTEXTILE	REVETMENT RIP RAP	FILTER STONE
STATION	TO STATION	LEFT	MEDIAN	RIGHT	EACH	LFT	SYS	TON	TON
LINE 'B'									
51+60	52+60	X				100			
51+60	52+60			X		100			
60+75	61+85	X				110			
60+75	61+85			X		110			
53+36		X		X			25.2	10.5	
54+12		X		X			25.2	10.5	
55+40		X					17.0	5.0	
55+50				X			17.0	5.0	
56+29		X					17.0	5.0	
56+40				X			17.0	5.0	
57+15		X		X			25.2	10.5	
58+95		X		X			25.2	10.5	
TOTAL						420	168.8	62.0	

LEGEND

- (2) Temporary Culvert Protection (For Rock Horseshoe Detail, See Sheet No. 8)
- CD Riprap Check Dam (For Locations And Spacing, See Table, This Sheet)
- Ditch Flow Line
- —SF— Temporary Silt Fence – See INDOT Standard Drawing No. E 205–TECP–02
- Sediment Trap See INDOT Standard Drawing No. E 205–TECD–03
- Stabilized Construction See INDOT Standard Drawing No. E 205–TECP–01

NOTES

1. The Contractor Shall Install All Sediment Traps And Check Dams Shown On The Plans Prior To Any Land Disturbing Activities.
2. Contractor Shall Seed/Mulch Banks Of Proposed Ditch As Soon As Grade Is Established.
3. Contractor Shall Keep An Up–To–Date Record Onsite Of Any Alterations To The Storm Water Pollution Prevention Plan.
4. Contractor Shall Notify The Hamilton County Soil And Water Conservation District At Least 48 Hours To Beginning Of Construction.
5. The Contractor Has Full Responsibility Of Inspecting The Erosion Control Measures On A Daily Basis. At A Minimum, Practices Need To Be Inspected Weekly, Within 24 Hours After Each Storm Event Over 1/2 Inch And Daily During Prolonged Storm Events. Failing Practices Shall Be Repaired Or Replaced Immediately.
6. Any Sediment Tracked Out Of Project Area Onto Public Streets Must Be Cleaned Up The Same Day It Occurs.
7. Contractor Shall Submit Construction Staging Plan Detailing All Vehicle And Equipment Parking Areas, Fueling Locations, Construction Trailer Placement, And Designated Concrete Truck Washout Areas.
8. If Construction Window Extends Through Winter, Temporary Mulching As Specified In Chapter 7 Of The Indiana Storm Water Quality Manual Shall Be Required.
9. Temporary Seeding Shall Be Installed On Any Cleared Area That Will Be Undisturbed For 15 Days Or More.
10. It Is The Responsibility Of The Contractor To Maintain And Contain Concrete Washout Areas And Staging Areas.
11. Contractor Is Required To Provide A Spill Prevention And Containment Plan Prior To Beginning Construction.
12. Install Permanent Riprap On The Side Slopes At Bridge Immediately After The Completion Of The Piling Operations.
13. Outside Temporary Berm At All Sediment Traps Shall Be A Minimum Of 2' In Height With 2:1 Side Slopes.

DLZ

FAISAL SALEEM REGISTERED No. 10707439 STATE OF INDIANA PROFESSIONAL ENGINEER
DLZ INDIANA, LLC

RECOMMENDED FOR APPROVAL — DESIGN ENGINEER — DATE 07-26-16

DESIGNED: CAP | DRAWN: CJS
CHECKED: FS | CHECKED: FS

HAMILTON COUNTY HIGHWAY DEPARTMENT

EROSION CONTROL PLAN
CAL CARSON ROAD

HORIZONTAL SCALE	BRIDGE FILE
1" = 40'	HAMILTON 304
VERTICAL SCALE	DESIGNATION
1" = 5'	
SURVEY BOOK	SHEETS
ELECTRONIC	7 of 28
CONTRACT	PROJECT
–	HCHD PB–13–0004

Date: Apr 21, 2016, 1:11pm User ID: thill
File: M:\PROJ\1383\0915 – Hamilton SS 32028 & 32059\Civil\DWG\0915EC10 Carson.dwg Model Tab: Erosion Control

RULE 5 CHECKLIST INFORMATION
ASSESSMENT OF CONSTRUCTION PLAN ELEMENTS

A1. Index Showing Locations Of Required Plan Elements:
See Erosion Control Plan, Sheets 23 And 24.

A2. 11x17 Inch Plat Showing Building Lot Numbers/boundaries And Road Layout/names:
Provided – See Attached.

A3. Narrative Describing The Nature And Purpose Of The Project:
the Work Shall Include Demolition, Earthwork, And New Construction As Required To complete The Replacement Of Two Small Bridge Structures, Roadway Approach Construction, guardrail Installation, And Construction Of Roadside Ditches And Two Stone Ditches.

A4. Vicinity Map Showing Project Location:
See Cover Sheet.

A5. Legal Description Of The Project Site:
The Project Is Located In The Northeast Quarter, Section 20, 21, And 29, Township 20N, Range 4E, Jackson Township, Hamilton County, Indiana. Latitude: N 40° 09' 41"; Longitude: W 86° 05' 30" And Latitude: N 40° 09' 46"; Longitude: W 86° 05' 19"

A6. Location Of All Lots And Proposed Site Improvements (Roads, Utilities, Structures, Etc.):
The Existing And Proposed Site Conditions, Including Lot Line, Property Lines, And Right-of-way Lines Are Shown On The Plan And Profile Sheets.

A7. Hydrologic Unit Code (14 Digit):
This Project Is Located Within The Following Hydrologic Unit Code Boundaries: 05120201080090.

A8. Notation Of Any State Or Federal Water Quality Permits:
This Project Will Require Idem Section 401 WQC Regional General Permit And A United States Army Corps Of Engineers 404 Permit.

A9. Specific Points Where Storm Water Discharge Will Leave The Site:
The Sheet Flow From Both Project Sites Will Both Follow Roadside Ditches Or Reconstructed Slopes And Discharge Into Taylor Ditch/Creek.

A10. Location And Name Of All Wetlands, Lakes And Water Courses On And Adjacent To The Site:
There Are No Known Wetlands Within The Project Area. Water Course Located Within The Project Is Taylor Ditch/Creek.

A11. Identification Of All Receiving Waters:
The Receiving Water For This Drainage Area Within HUC 05120201080090 Is Taylor Ditch/Creek And White River.

A12. Identification Of Potential Discharges To Ground Water (Abandoned Wells, Sinkholes, Etc.):
Stormwater May Be Discharged To Groundwater Through Infiltration Within Roadside Ditches.

A13. 100 Year Floodplains, Floodways And Floodway Fringes:
Flood Insurance Rate Map (Firmette) From The National Flood Insurance Program Shows The Project Limits Do Not Fall Within A Special Flood Hazard Area.

A14. Pre-Construction And Post- Construction Estimate Of Peak Discharge (10 Year Storm Event):
Along Cal Carson Road:
10 Year Pre-Construction Storm – 5.1 C.f.s.
10 Year Post-Construction Storm – 6.0 C.f.s.

Along 256th Street
10 Year Pre-Construction Storm – 3.2 C.f.s.
10 Year Post-Construction Storm – 3.9 C.f.s.

Along Taylor Creek Under Cal Carson Road Bridge:
10 Year Pre-Construction Storm – 495 C.f.s.
10 Year Post-Construction Storm – 495 C.f.s.

Along Taylor Creek Under 256th Street Bridge:
10 Year Pre-Construction Storm – 446 C.f.s.
10 Year Post-Construction Storm – 446 C.f.s.

A15. Adjacent Land Use, Including Upstream Watershed:
The Land Uses Immediately Adjacent To The Project Are Agricultural And Residential.

A16. Locations And Approximate Boundaries Of All Disturbed Areas (Construction Limits):
See Included Construction Drawings For The Locations And Approximate Boundaries Of All Disturbed Areas.

A17. Identification Of All Existing Vegetative Cover:
Existing Vegetative Cover Within The Project Area Is Mostly Agricultural With Some Bushes And Trees Along Taylor Ditch.

A18. Soils Map Including Soil Descriptions And Limitations:
Project Area Is Composed Of Br-Brookston Silty Clay Loam, Cra-crosby Silt Loam, Fine Loamy Subsoil, 0 To 2 Percent Slopes, Mma-Miami Silt Loam, 0-2 Percent Slopes; Mmb2-Miami Silt Loam, 2 To 6 Percent Slopes, Eroded; Pn-Patton Silty Clay Loam; Sh-Shoals Silt Loam; And Sx-Sloan Silty Loam, Sandy Substratum According To Soils Map From United States Department Of Agriculture, Soil Conservation "Soil Survey Of Hamilton County, Indiana."

A19. Locations, Size And Dimensions Of Proposed Stormwater Systems (Pipes, Swales, Channels, Etc):
Stormwater System Consists Of Surface Flow Via A Roadside Ditch And A Drainage Culvert.

A20. Plans For Any Off-site Construction Activities Associate With This Project (Sewer/Water Tie-ins):
There Are No Improvements Associated With This Project That Are Not Shown Within The Plans.

A21. Locations Of Proposed Soil Stockpiles And/Or Borrow/Disposal Areas:
Disposal Of The Existing Pavement Will Be Required For This Project. Location Of The Disposal Area Will Be Determined By The Contractor And Will Be In Accordance With INDOT Requirements And All State And Local Agency Requirements. Ditch Stockpiles Along Both Sides Of The Ditch Are Required.

A22. Existing Site Topography At An Interval Appropriate To Indicate Drainage Patterns:
See Plan And Profile Sheets For Existing Site Topography.

A23. Proposed Final Topography At An Interval Appropriate To Indicate Drainage Patterns:
See Plan And Profile Sheets For Final Topography.

STORMWATER POLLUTION PREVENTION PLAN

B1. Description Of Potential Pollutant Sources Associated With Construction Activities:
Potential Sources Of Pollution Include Fuel And Oil Leakage From Equipment And Vehicles, And Fueling Locations, Materials Storage, And Sediment Runoff. The Contractor Shall Also Comply With Section 106.08, Section 107.08, And Section 108.04 Of The Current INDOT S tandard Specifications And Any Supplements Thereto.

B2. Sequence Describing Stormwater Quality Measure Implementation Relative To Land Disturbing Activities:
Contractor Shall Inspect Practices At Least Once A Week To Make Repairs Immediately After Periods Of Rainfall During All Phases Of The Erosion Control Construction Sequence.

1. Construction Routes– Stabilize Bare Areas With Stone And Temporary Vegetation As Work Takes Place Per INDOT Requirements. All Ingress And Egress Shall Utilize Existing Paved Surfaces Where Possible.
2. Silt Fence – Install Principal Barriers After Construction Site Is Assessed And As Land Disturbance Begins. See Details On INDOT Standard Drawings Included In Appendix D.
3. Rip Rap, Temporary Seeding, Temporary Slope Drains – Apply Temporary Stabilization Measures Immediately On All Disturbed Areas Where Work Is Delayed Or Completed. Follow Timeframes Allowed Per INDOT Standard Specifications For Temporary Cover.
4. Culvert Replacement – Provide Sediment Control At Upstream Ends Of Culverts Immediately Following Installation.
5. Rock Check Dams, Rip Rap, Erosion Control Blanket – Install Within Roadside Ditches And Side Slopes Where Specified As Earthwork Progresses. See Details On INDOT Standard Drawings.
6. Paving, Signage, Guardrail – Following Earthwork, Final Pavement Surfaces Will Account For The Majority Of Stabilization On This Project.
7. Permanent Seeding– Install Landscape Measures As Shown On Plans After Adjacent Hardscape Work Is Completed.
8. Construction Close Out – Remove Remaining Temporary Measures After Site Is Stabilized And Restore Affected Areas As Needed.
9. Final Site Inspection – A Final Site Inspection Will Take Place To Assure That All Requirements Of The Swppp, Construction Plans, And Supporting Documents Have Been Fulfilled. Then A Notice Of Termination (NOT) Must Be Submitted To And Approved By The Hamilton County Swcd Office. The NOT Form Can Be Found At Http://www.in.gov/indot/div/pubs/waterway/appendix_j-7_notice_of_termination.pdf.

B3. Stable Construction Entrance Locations And Specifications (At All Points Of Ingress And Egress):
Stable Construction Entrance Will Be Provided At Both Ends Of The Project As Per INDOT Standards And Specifications.

B4. Sediment Control Measures For Sheet Flow Areas:
Sediment Control Measures For Sheet Flow Areas Will Be Silt Fence Installed And Maintained In Accordance With Section 205 Of The Current INDOT Specifications And The Details On The Plans In Appendix A.

B5. Sediment Control Measures For Concentrated Flow Areas:
Rock Check Dams And Sediment Traps Will Provide Sediment Control At Roadside Ditches Through The Project Area. Rock Horseshoe Culvert Protection Will Be Provided At New Culvert Inlets. This Item Will Be Installed And Maintained In Accordance With The Details On The Plans And Per The INDOT Standard Details.

B6. Storm Sewer Inlet Protection Measure Locations And Specifications:
No Inlet Or Catch Basins Are Provided In This Project. Upstream Ends Of Culverts Will Be Protected With Rock Horseshoe Protection Per The Details On The Plans.

B7. Runoff Control Measures (e.g. Diversions, Rock Check Dams, Slope Drains, Etc.):
Silt Fencing Will Be Provided To Control Runoff From The Site In Accordance With Section 205 Of The Current INDOT Standard Specifications And The Details On The Plans.

B8. Storm Water Outlet Protection Specifications:
Not Applicable To This Project.

B9. Grade Stabilization Structure Locations And Specifications:
Not Applicable To This Project.

B10. Location, Dimensions, Specifications, And Construction Details Of Each Stormwater Quality Measure:
Stormwater Quality Will Be Address By Seeding Of All Disturbed Areas In Accordance With The Plans.

B11. Temporary Surface Stabilization Methods Appropriate For Each Season (Include Sequencing):
If Required During Construction, INDOT Seeding Mixture T Will Be Placed On Disturbed Areas At The Rate Of 170 Lb/Acre Throughout The Project In Accordance With Section 621.06 Of The Current INDOT Standard Specification.

B12. Permanent Surface Stabilization Specifications (include Sequencing):
All Disturbed Areas Must Be Permanently Stabilized. This Will Be Achieved By Seeding All Disturbed, Unpaved Areas Of The Project Area In Accordance With Section 621 Of The Current INDOT Standard Specification.

B13. Material Handling And Spill Prevention Plan
Prior to the commencement of construction the Contractor will be required to submit a material handling and spill prevention plan. The contractor is responsible for prevention and cleanup of any of these sources. The contractor is urged to protect the site and maintain a single storage and fueling area on site. It is the responsibility of the contractor to handle the pollutant properly and respond to a spill. Materials should be stored in a manner that prevents or minimizes the chance that a spill will reach soils, groundwater or surface water.

If a spill does occur, then the spill must be contained immediately utilizing appropriate response techniques including diking and absorbents. Clean up of the spill should occur as soon as possible once the spill is stabilized and contained. Spills shall be cleaned up using acceptable methods such as, absorbents on impervious surfaces or removal of contaminated soils. All spills that occur near an inlet to the stormwater conveyance system must have "curbing" implemented immediately. "Curbing" is the use of a barrier (absorbent material) which prevents the spill from making contact with the stormwater conveyance system or stormwater runoff. In case of a spill, Andy D. Conover from the County Surveyor's Office should be contacted and informed of the situation. The County Surveyor's Office can be reached at (317) 776-8495.

In all cases cleanup standards must adhere to local, state and federal requirements. Failure to clean up any spill is a violation of the Indiana State Spill Rule (327 IAC 2-6.1), which is enforced by the Indiana Department of Environmental Management (IDEM). Certain spills must be reported to the local response agency, Local Emergency Planning Committee and/or IDEM. Initial calls should be made to the 911 system if the spill exceeds reportable quantities or is a threat to public safety. The 911 system will typically notify the Fire Department. IDEM (1-888-233-7745) can typically assist with information on clean up operations or clean up contractors.

B14. Monitoring And Maintenance Guidelines For Each Proposed Stormwater Quality Measure:
On-Site Monitoring Will Be Performed By The Owner's Representative In Cooperation With The Contractor. The Contractor Shall Monitor The Following Measures, As Well As Any Other Additional Measures Installed On Site: Silt Fence, Rock Check Dams, Along With Cleanup Of Sediment Tracked Offsite. Maintenance Shall Include Keeping An Up-To-Date Record Onsite Of Any Alterations To The Stormwater Pollution Prevention Plan Per The General Notes On The Plans.

All Maintenance Guideline Shall Follow Latest Edition Of INDOT Standard specifications.

B15. Monitoring And Maintenance Guidelines For Each Proposed Stormwater Quality Measure:
There Is No Construction On Individual Building Lots Associated With This Project.

STORMWATER POLLUTION PREVENTION PLAN– POST CONSTRUCTION COMPONENT

C1. Description Of Pollutants And Their Sources Associated With Proposed Land Use:
This Project Pollutant Sources Will Be Similar To Those Already Existing In The Project Area. Pollutants That May Be Generated During Construction Include Oil, Grease, Antifreeze, Brake Fluid, Brake Dust, Rubber, Gasoline, Diesel, Metals, Grit, Trash, Road Salt And Sand.

C2. Sequencing Describing Stormwater Quality Measure Implementation:
Permanent Seeding Will Be Completed For All Disturbed Areas After Construction Is Completed And Final Grading Is In Place.

C3. Description Of Proposed Post Construction Stormwater Measures (Include A Written Description Of How These Measures Will Reduce Discharge Of Expected Pollutants):
Post Construction Stormwater Quality Measures Include Permanent Seeding Which Will Slow Water Runoff From The Site, And Encourage Settling Of Pollutants And Infiltration. Roadway Ditches With More Than 0.99% Longitudinal Slopes Will Be Sodded. Permanent Riprap Protection Will Be Provided At Outside Bridge Abutments.

C4. Location, Dimensions, Specifications, And Construction Details Of Each Stormwater Quality Measure:
See Plans And Refer To Section 621 & 622 Of The Current INDOT Standard Specification For Additional Landscape Information.

C5. Description Of Maintenance Guidelines For Post Construction Stormwater Quality Measure:
Water Quality Measures As Described In Items C3 And C4 Will Be Maintained By Hamilton County Following Construction Completion. Maintenance Should, Include At Minimum, Regular Mowing And Monitoring Of The Site For Any Erosion Or Bare Spots.

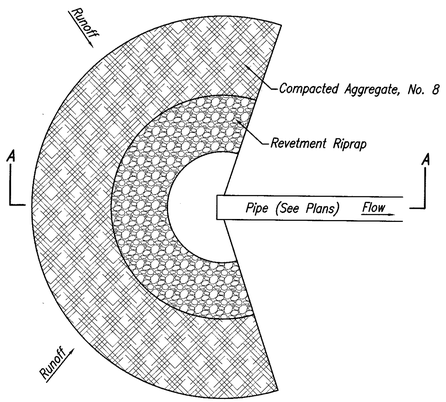

PLAN VIEW

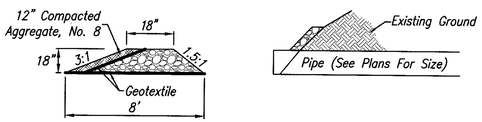

SECTION A-A

NOTES

1. The Rock Horseshoe Is A Sediment Control Protection Method Used Around A Culvert Inlet To Allow Sediments From On-site Runoff To Drop Out
2. Culvert Protection Shall Not Be Used In Streams Or Other Natural Water Resources.
3. Culvert Protection Should Not Be Used At The Culvert Outlet.
4. One Layer Of Geotextile Fabric Shall Be Placed Between The Aggregate Layer And Riprap Layer And Another Layer Of Geotextile Fabric Shall Be Placed Under The Entire Area Covered Riprap.

SEDIMENT CONTROL ROCK HORSESHOE DETAIL
NOT TO SCALE

DLZ

FAISAL SALEEM REGISTERED No. 10707439 STATE OF INDIANA PROFESSIONAL ENGINEER
DLZ INDIANA, LLC

RECOMMENDED FOR APPROVAL	DESIGN ENGINEER	07-26-16	DATE
DESIGNED: CAP	DRAWN: CJS		
CHECKED: FS	CHECKED: FS		

HAMILTON COUNTY HIGHWAY DEPARTMENT

EROSION CONTROL DETAILS

HORIZONTAL SCALE	BRIDGE FILE
	HAMILTON 304
VERTICAL SCALE	DESIGNATION
SURVEY BOOK	SHEETS
ELECTRONIC	8 of 28
CONTRACT	PROJECT
–	HCHD PB-13-0004

Date: Apr. 21, 2016, 1:11pm User ID: thill
File: M:\PROJ\1363\0915 – Hamilton SS 32028 & 32059\Civil\DWG\0915EC11 Carson.dwg Model Tab: Plan Set

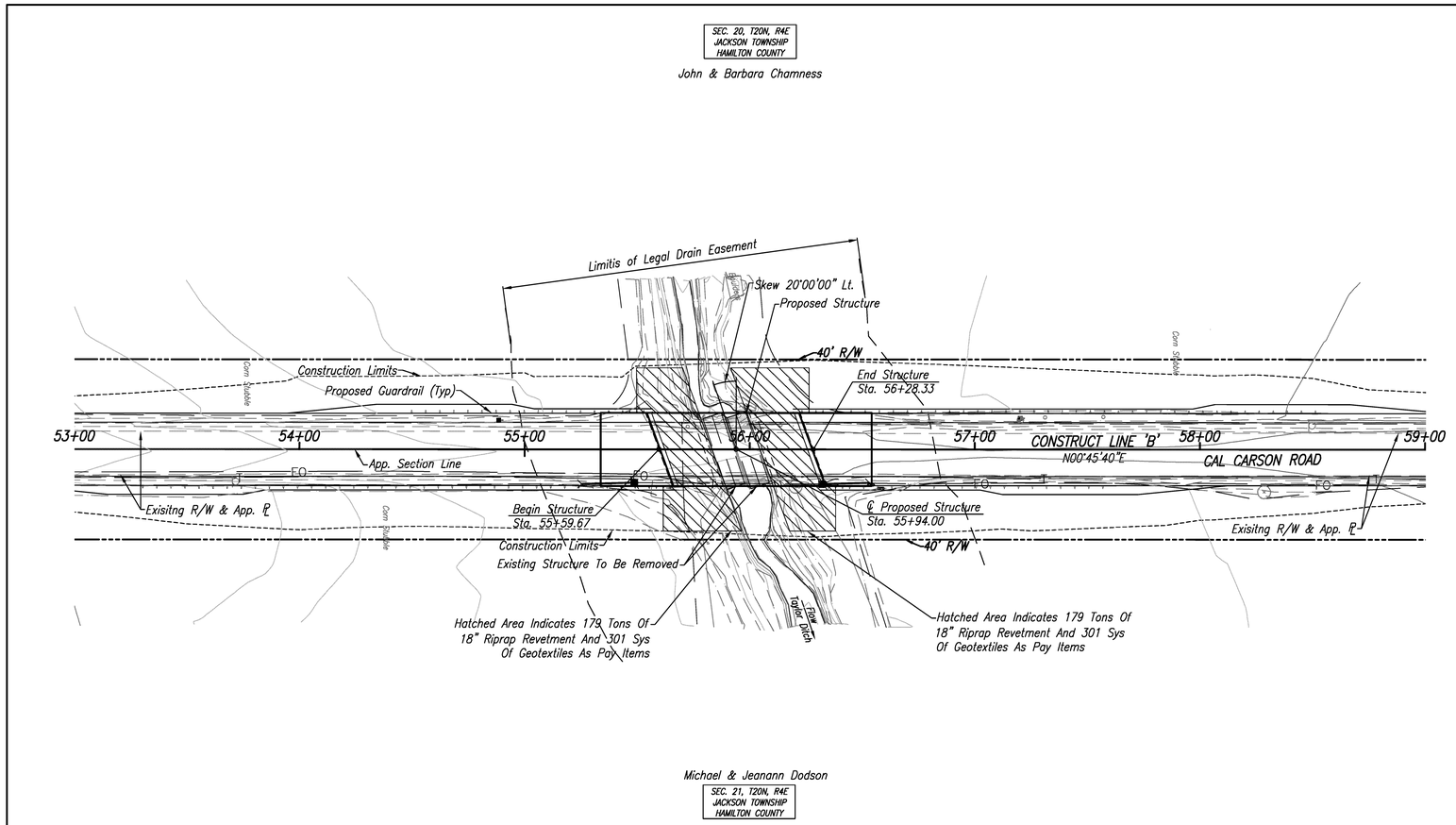

SITUATION PLAN

Contour Interval = 1 Ft.

PRESENT STRUCTURE

The Existing Small Structure Will Be Removed. The Existing Structure Is Two 60"x120" Corrugated Metal Pipes. Existing Plans Of The Structure Are Not Available.

TAYLOR DITCH

The Drainage Area Is 3.87 Sq. Miles Of Level Terrain And Cultivated Land. The Structure Is Located Approximately 2.6 Miles Upstream Of Little Ciscero Creek Which Flows Into The White River.

NOTES

1. See Plan And Profile For Additional Work, Benchmarks, Profile Grade Data And Additional Details.
2. All Topography Taken From Line 'B'
3. All R/W Taken From Line 'B' Except As Noted Otherwise.
4. For Ditch Work and Associated Construction Limits, See Bridge 303 Plans Sheet 18–29.

HYDRAULIC DATA

Drainage Area	3.87 Sq. Mi.
Q_{100}	1,300 cfs
El. @ Q_{100}	865.60
Velocity @ Q_{100}	5.22 fps
Gross Waterway Opening Required Below Q_{100} El. (Structure)	250 SFT
Gross Waterway Opening Provided Below Q_{100} El. (Structure)	257 SFT
Proposed Road Overflow Area	0.00 SFT
Minimum Low Structure Elev. Provided	867.28
Skew Angle	20°00'00" Lt.
Existing Waterway Opening Below Q_{100} El. (Structure)	66.76 SFT
Existing Road Overflow Area	380 SFT
Existing Low Structure Elev.	863.45
Change In Backwater	–0.28 Ft.
Scour Elev.	849.73

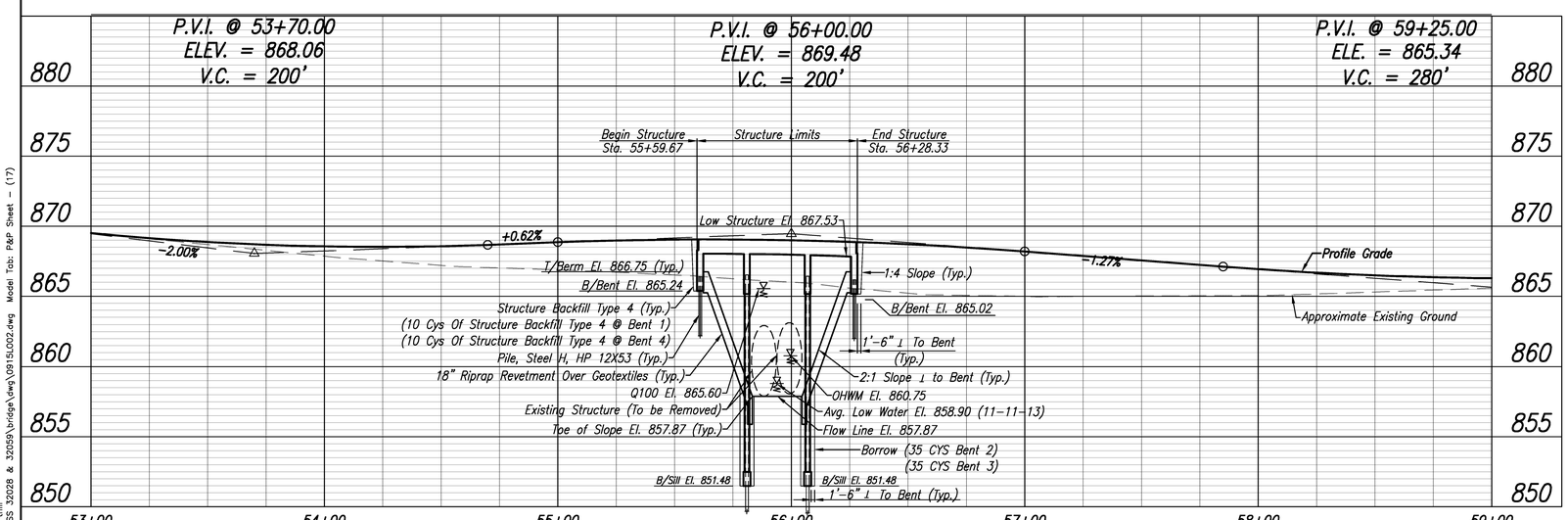

PROPOSED PROFILE (LINE 'B')

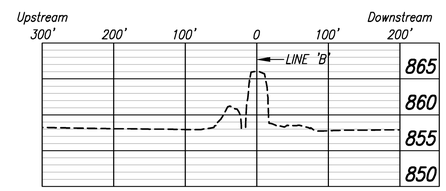

PROFILE OF TAYLOR DITCH

Horizontal Scale: 1" = 100', Vertical Scale: 1" = 10'

CAL CARSON ROAD OVER TAYLOR DITCH

CONTINUOUS REINFORCED CONCRETE SLAB BRIDGE
3 SPANS: 20'–0", 26'–0", 20'–0"
SKEW: 20°00'00" LT.
CLEAR ROADWAY WIDTH: 32'–0"
HAMILTON COUNTY

DLZ

MICHAEL A. KUNNETH REGISTERED No. 910382 STATE OF INDIANA PROFESSIONAL ENGINEER
DLZ INDIANA, LLC

RECOMMENDED FOR APPROVAL Michael A Kunneth 7/25/2016
DESIGN ENGINEER DATE

DESIGNED: JFM DRAWN: CJS
CHECKED: DOR CHECKED: JFM

HAMILTON COUNTY HIGHWAY DEPARTMENT

BRIDGE 304
LAYOUT

HORIZONTAL SCALE	BRIDGE FILE
1" = 30'	HAMILTON 304
VERTICAL SCALE	DESIGNATION
1" = 5'	
SURVEY BOOK	SHEETS
ELECTRONIC	9 of 28
CONTRACT	PROJECT
–	HCHD PB–13–0004

Date: Apr 21, 2016, 1:12pm User ID: thill
File: M:\PROJ\1353\09-15 - Hamilton SS 32028 & 32059\bridge\dwg\09915L002.dwg Model Tab: P&P Sheet - (17)

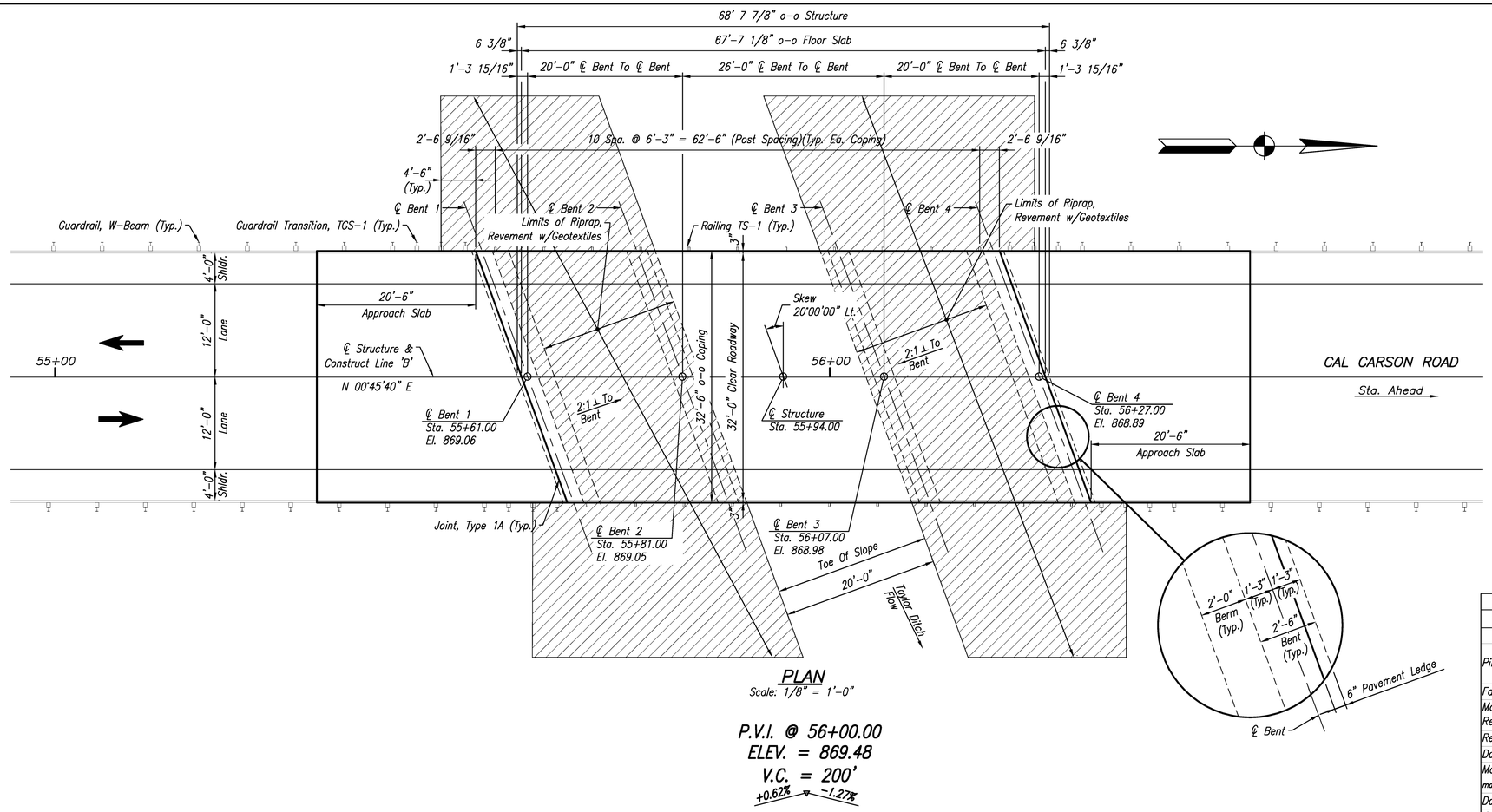

PLAN

Scale: 1/8" = 1'-0"

P.V.I. @ 56+00.00
ELEV. = 869.48
V.C. = 200'
+0.62% −1.27%

Structure to be Built to 200' Vertical Curve

DESIGN DATA

Allowable Design Stresses:

Reinforcing Steel (Grade 60):	fy=60,000 PSI
Class "A" Concrete:	f'c=3,500 PSI
Class "B" Concrete:	f'c=3,000 PSI
Class "C" Concrete:	f'c=4,000 PSI

Live Load:
Designed for HL-93 Loading in Accordance with AASHTO LRFD Bridge Specifications 6th Edition, 2012 And It's Subsequent Interims.

Dead Load:
Actual Dead Load Plus 35 PSF Future Wearing Surface. The Slab Thickness Consists of a 11 1/2" Structural Depth and a 1/2" Wearing Surface. Overall Slab (1'-0") Consists of Class "C" Concrete.

GENERAL NOTES

1. Reinforcing Steel Covering Shall be 2 1/2" in Top and 1" in Bottom of Floor Slabs and 2" in All Other Parts, Unless Noted.
2. See Recurring Special Provision E 706-B-140d for TS-1 Railing Details.

SUMMARY OF PILE LOADING FOR GEOTECHNICAL TESTING

SUPPORT	BENT 1	BENT 2	BENT 3	BENT 4
Pile Size, Type, And Grade	Pile, Steel H, HP12x53, Grade 50 ksi	Pile, Steel H, HP12x53, Grade 50 ksi	Pile, Steel H, HP12x53, Grade 50 ksi	Pile, Steel H, HP12x53, Grade 50 ksi
Factored Design Load Qf (kips)	125	131	131	125
Maximum Factored Design Soil Resistance $R_{R\ max}$ (kips)	158	145	131	158
Resistance Factor ϕ_{dyn}	0.55	0.55	0.55	0.55
Downdrag Load, DD (kips)	0	0	0	0
Maximum Nominal Soil Resistance $R_{n\ max}$ (kips)	289	264	239	289
Downdrag Friction, R_{sdd} (kips)	0	0	0	0
Scour Zone Friction, $R_{s\ scour}$ (kips)	0	25	50	0
Maximum Nominal Drivivg Resistance $R_{ndr\ max}$ (kips)	289	289	289	289
Testing Method	INDOT Standard Specification 701.05(a)			

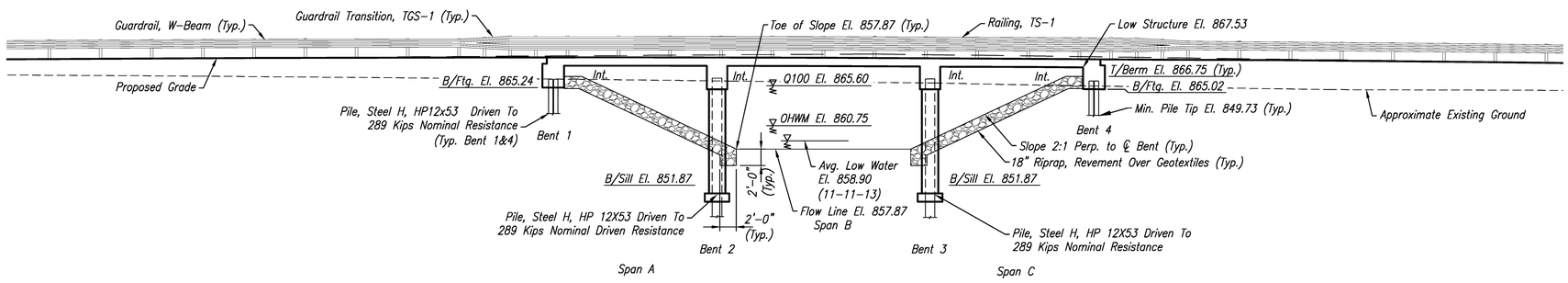

ELEVATION

Scale: 1/8" = 1'-0"

CAL CARSON ROAD OVER TAYLOR DITCH
CONTINUOUS REINFORCED CONCRETE SLAB BRIDGE
3 SPANS: 20'-0", 26'-0", 20'-0"
SKEW: 20°00'00" LT.
CLEAR ROADWAY WIDTH: 32'-0"
HAMILTON COUNTY

DLZ

MICHAEL A. KUMMETH REGISTERED No. 910382 STATE OF INDIANA PROFESSIONAL ENGINEER
DLZ INDIANA, LLC

RECOMMENDED FOR APPROVAL Michael A Kummeth 7/25/2016
DESIGN ENGINEER DATE

DESIGNED: JFM DRAWN: Jlm
CHECKED: DOR CHECKED: JFM

HAMILTON COUNTY HIGHWAY DEPARTMENT

BRIDGE 304 GENERAL PLAN

HORIZONTAL SCALE	BRIDGE FILE
1/8" = 1'-0"	HAMILTON 304
VERTICAL SCALE	DESIGNATION
1/8" = 1'-0"	
SURVEY BOOK	SHEETS
ELECTRONIC	10 of 28
CONTRACT	PROJECT
–	HCHD PB-13-0004

Date: Apr 21, 2016, 1:12pm User ID: thill
File: M:\PROJ\1363\0915 - Hamilton SS 32028 & 32059\bridge\dwg\0915GP01.dwg Model Tab: Plan Set

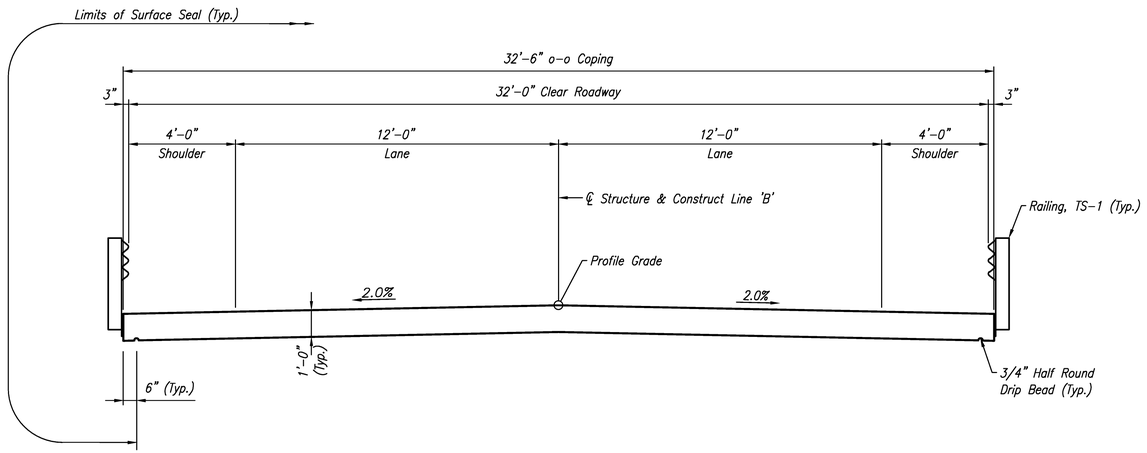

SECTION ⊥ TO STRUCTURE

Scale: 3/8" = 1'-0"

CAL CARSON ROAD OVER TAYLOR DITCH
CONTINUOUS REINFORCED CONCRETE SLAB BRIDGE
3 SPANS: 20'-0", 26'-0", 20'-0"
SKEW: 20°00'00" LT.
CLEAR ROADWAY WIDTH: 32'-0"
HAMILTON COUNTY

DLZ

MICHAEL A. KUMMETH
REGISTERED
No. 910382
STATE OF INDIANA
PROFESSIONAL ENGINEER
DLZ INDIANA, LLC

RECOMMENDED FOR APPROVAL Michael A Kummeth 7/25/2016
DESIGN ENGINEER DATE

DESIGNED: JFM DRAWN: Jlm
CHECKED: DOR CHECKED: JFM

HAMILTON COUNTY
HIGHWAY DEPARTMENT

BRIDGE 304
GENERAL PLAN

HORIZONTAL SCALE	BRIDGE FILE
3/8" = 1"-0"	HAMILTON 304
VERTICAL SCALE	DESIGNATION
3/8" = 1"-0"	
SURVEY BOOK	SHEETS
ELECTRONIC	11 of 28
CONTRACT	PROJECT
–	HCHD PB-13-0004

Date: Apr 21, 2016, 1:12pm User ID: thill
File: M:\PROJ\1383\0915 – Hamilton SS 32028 & 32039\bridge\dwg\0915GP01.dwg Model Tab: Plan Set (2)

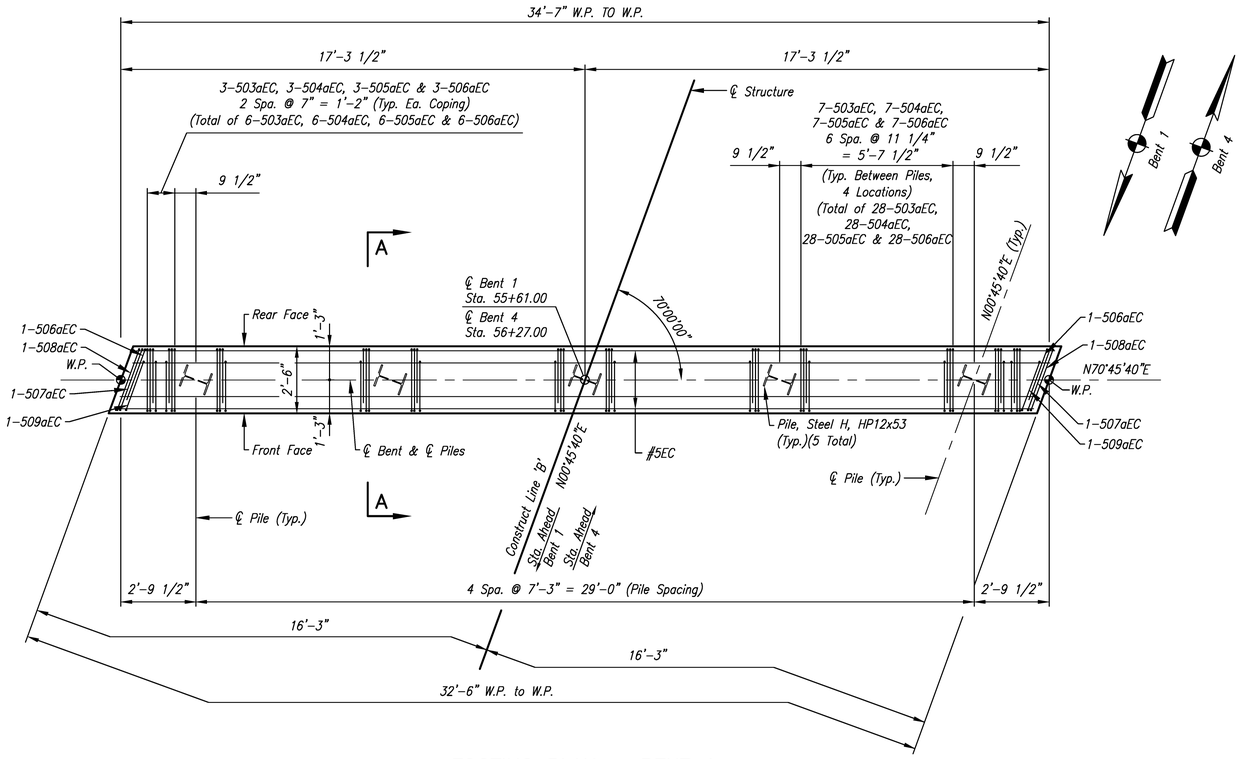

FOOTING PLAN – BENT 1

(Bent 1 Shown; Bent 4 Similar)
Scale: 3/8" = 1"-0"

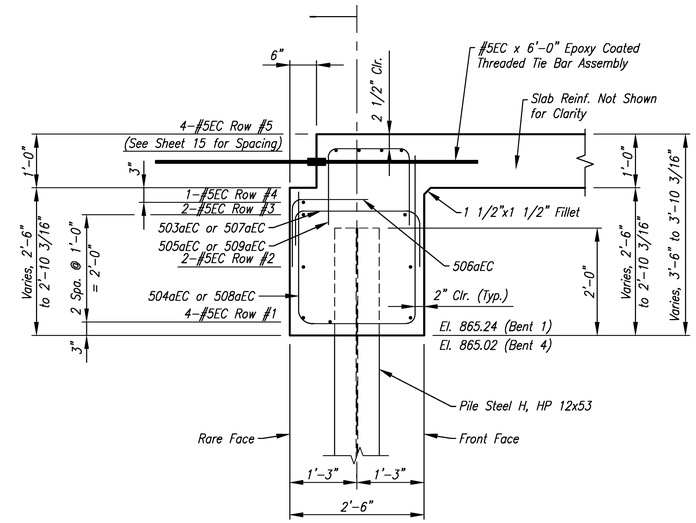

SECTION A–A

Scale: 3/4" = 1"-0"

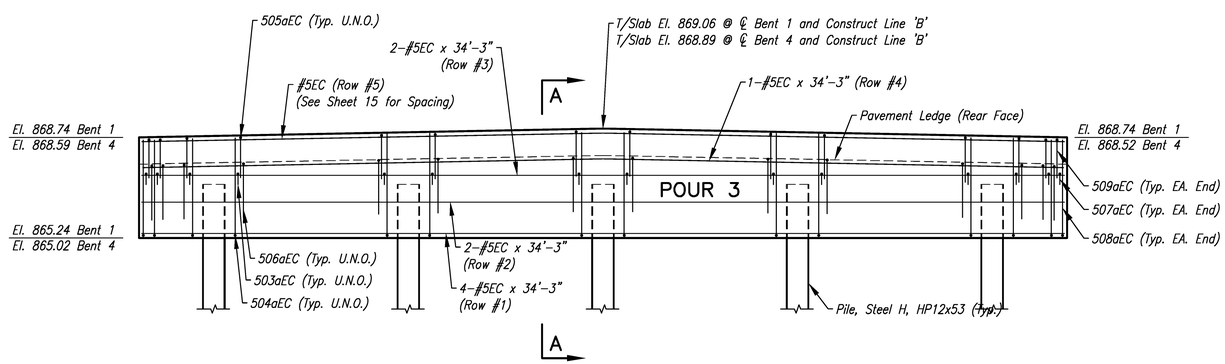

ELEVATION – BENT 1

(Bent 1 Shown; Bent 4 Similar)
Scale: 3/8" = 1"-0"

NOTES:

1. For General Notes, See Sheet 10.
2. For Reinforcing Bar Notes, See Standard Drawing No. E 703-BRST-01.
3. For Bar Bends and Bill of Materials, See Sheet 16.
4. For Floor Plan, See Sheet 15.

DLZ

MICHAEL A. KUMMETH
REGISTERED
No. 910382
STATE OF INDIANA
PROFESSIONAL ENGINEER
DLZ INDIANA, LLC

RECOMMENDED FOR APPROVAL Michael A Kummeth 7/25/2016
DESIGN ENGINEER DATE

DESIGNED: JFM DRAWN: Jlm
CHECKED: DOR CHECKED: JFM

HAMILTON COUNTY HIGHWAY DEPARTMENT

BRIDGE 304
BENT 1 AND 4 DETAILS

HORIZONTAL SCALE	BRIDGE FILE
AS NOTED	HAMILTON 304
VERTICAL SCALE	DESIGNATION
AS NOTED	
SURVEY BOOK	SHEETS
ELECTRONIC	12 of 28
CONTRACT	PROJECT
–	HCHD PB-13-0004

Date: Apr 21, 2016, 1:13pm User ID: thill
File: M:\PROJ\13653\0915 - Hamilton SS 320028 & 320059\bridge\dwg\091SSP01.dwg Model Tab: Bent 1 & 4

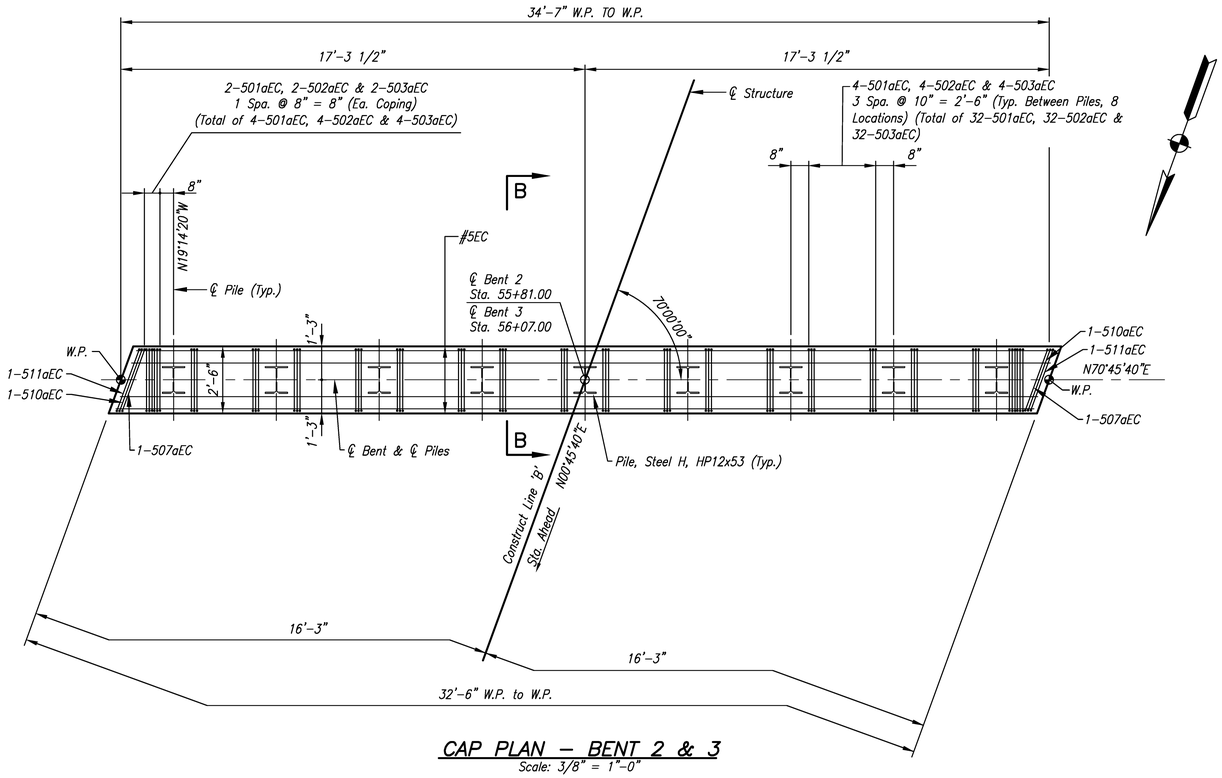

CAP PLAN – BENT 2 & 3

Scale: 3/8" = 1"-0"

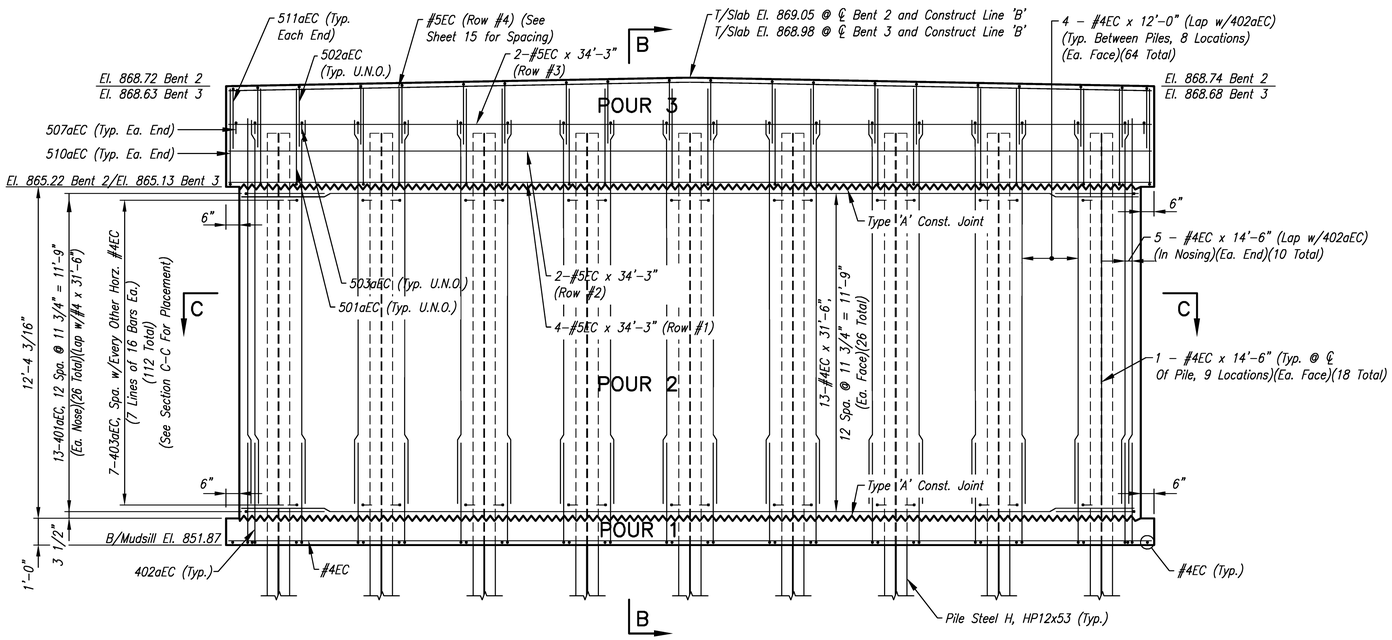

ELEVATION – BENT 2 & 3

Scale: 3/8" = 1"-0"

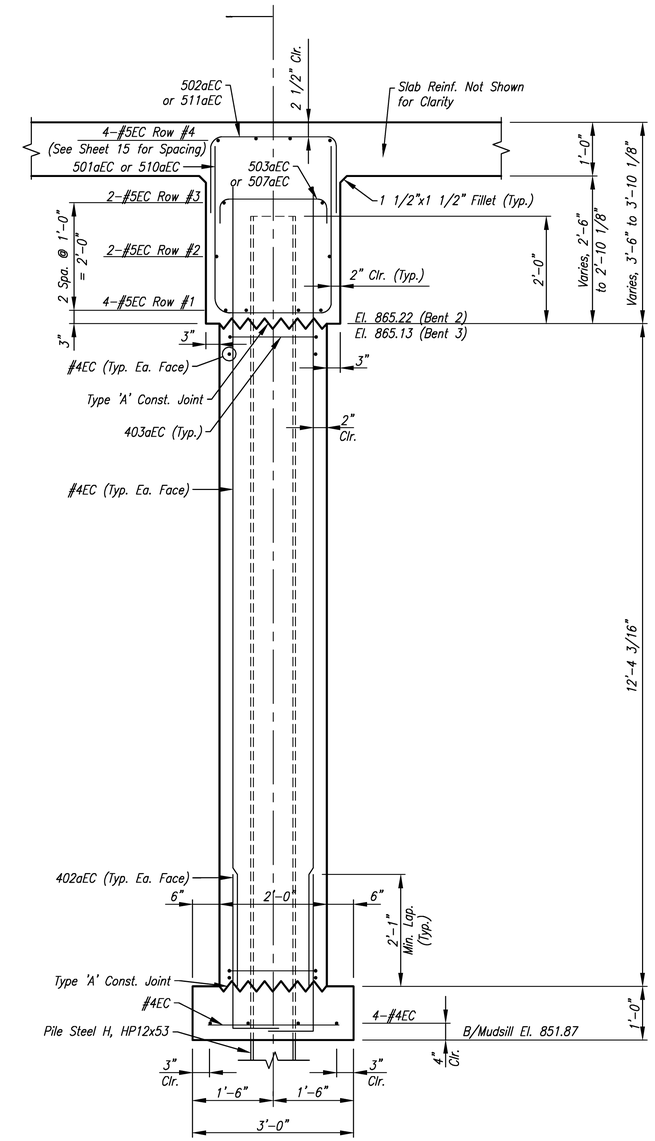

SECTION B–B

Scale: 3/4" = 1"-0"

NOTES:

1. For General Notes, See Sheet 10.
2. For Reinforcing Bar Notes, See Standard Drawing No. E 703-BRST-01.
3. For Bar Bends & Bill of Materials, See Sheet 16.
4. For Floor Plan, See Sheet 15.
5. For Details of Pile Steel H, Reinforced Concrete Encased, HP12x53 See Standard Drawing No. E 701-BPIL-01.
6. For Section C-C And Mudsill, See Sheet No. 14.
7. For Type 'A' Construction Joint, See Standard Drawing No. E 702-CJTA-01.

DLZ

MICHAEL A. KUMMETH REGISTERED No. 910382 STATE OF INDIANA PROFESSIONAL ENGINEER
DLZ INDIANA, LLC

RECOMMENDED FOR APPROVAL Michael A Kummeth 7/25/2016
DESIGN ENGINEER DATE

DESIGNED: JFM DRAWN: CJS
CHECKED: DOR CHECKED: JFM

HAMILTON COUNTY HIGHWAY DEPARTMENT

BRIDGE 304 BENT 2 AND 3 DETAILS

HORIZONTAL SCALE	BRIDGE FILE
AS NOTED	HAMILTON 304
VERTICAL SCALE	DESIGNATION
AS NOTED	
SURVEY BOOK	SHEETS
ELECTRONIC	13 of 28
CONTRACT	PROJECT
–	HCHD PB-13-0004

Date: Apr 21, 2016, 1:13pm User ID: thill
File: M:\PROJ\1365\09115 - Hamilton SS 32028 & 32059\bridge\dwg\09155F01.dwg Model Tab: Bent 2 & 3

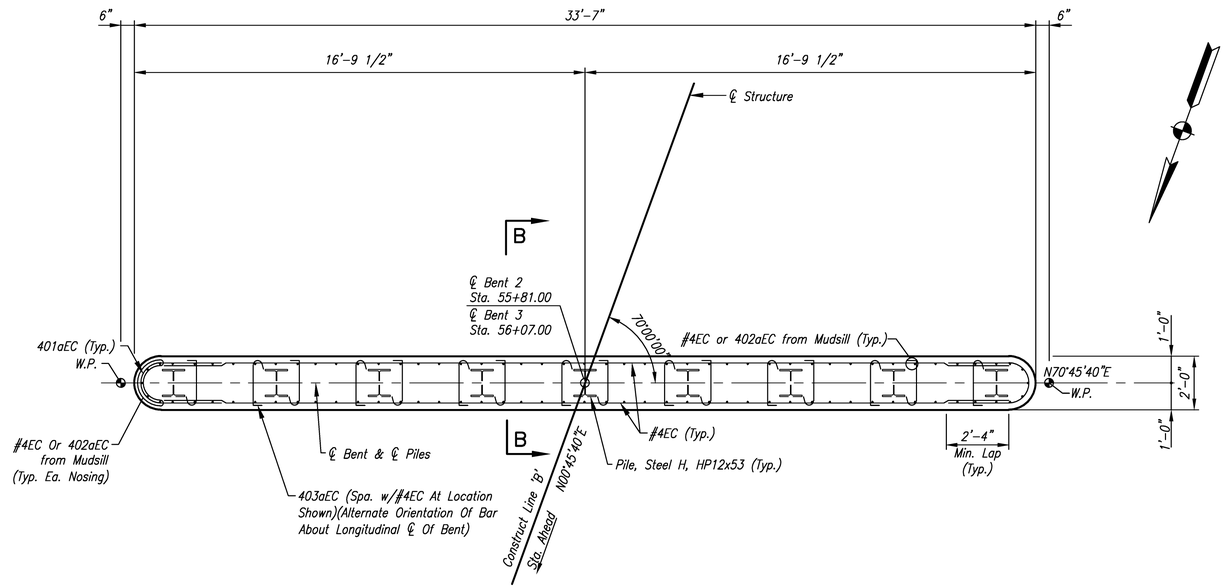

SECTION C–C

Scale: 3/8" = 1'-0"

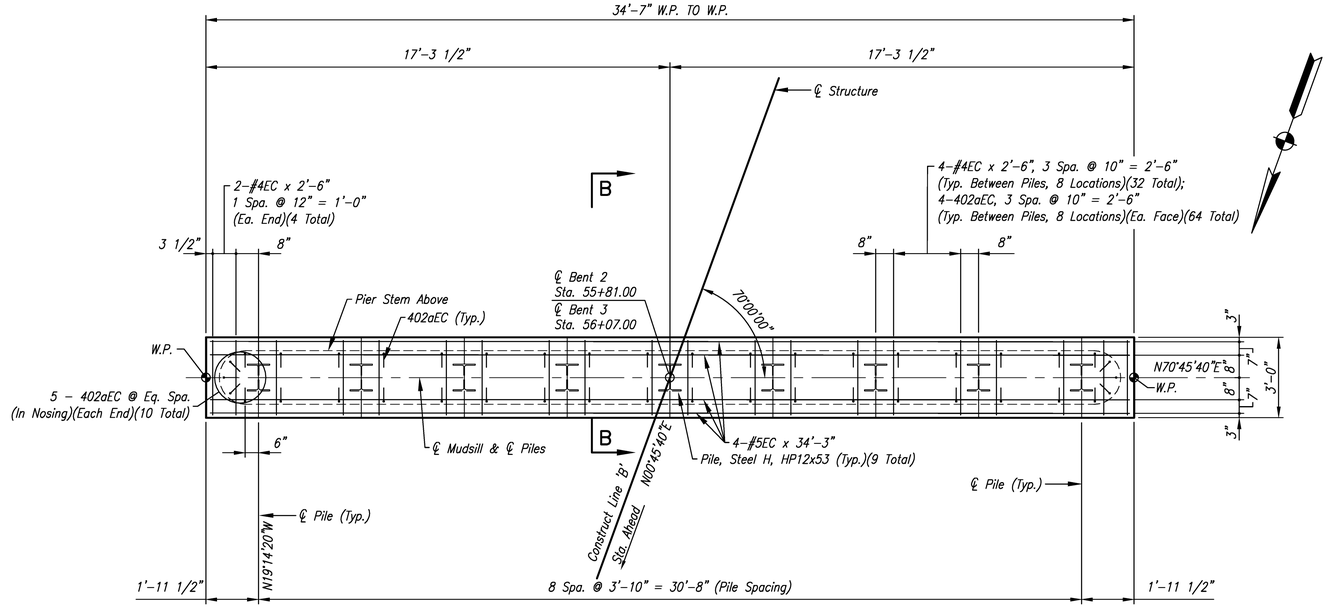

MUDSILL PLAN – BENT 2

Scale: 3/8" = 1'-0"

NOTES:

1. For General Notes, See Sheet 10.
2. For Reinforcing Bar Notes, See Standard Drawing No. E 703–BRST–01.
3. For Bar Bends & Bill of Materials, See Sheet 16.
4. For Floor Plan, See Sheet 15.
5. For Details of Pile Steel H, Reinforced Concrete Encased, HP12x53 See Standard Drawing No. E 701–BPIL–01.

DLZ

MICHAEL A. KUMMETH REGISTERED No. 910382 STATE OF INDIANA PROFESSIONAL ENGINEER
DLZ INDIANA, LLC

RECOMMENDED FOR APPROVAL Michael A Kummeth 7/25/2016
DESIGN ENGINEER DATE

DESIGNED: JFM DRAWN: CJS
CHECKED: DOR CHECKED: JFM

HAMILTON COUNTY
HIGHWAY DEPARTMENT

BRIDGE 304
BENT 2 AND 3 DETAILS

HORIZONTAL SCALE	BRIDGE FILE
3/8" = 1'-0"	HAMILTON 304
VERTICAL SCALE	DESIGNATION
3/8" = 1'-0"	
SURVEY BOOK	SHEETS
ELECTRONIC	14 of 28
CONTRACT	PROJECT
–	HCHD PB–13–0004

Date: Apr 21, 2016, 1:13pm User ID: thill
File: M:\PROJ\13653\091515 – Hamilton SS 32028 & 32059\bridge\dwg\091515P01.dwg Model Tab: Bent 2 & 3 (2)

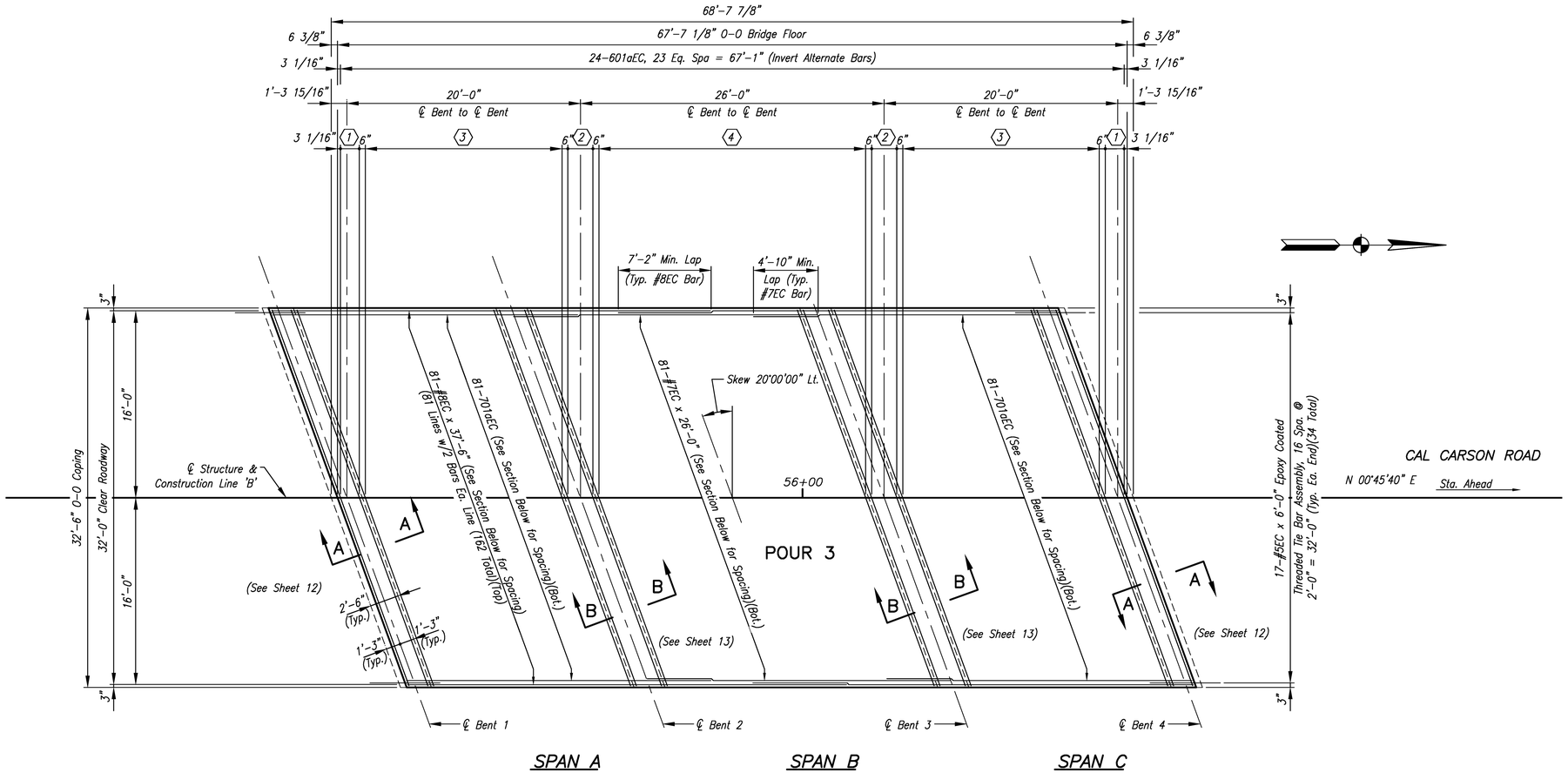

SPAN A SPAN B SPAN C

FLOOR PLAN

Scale: 3/16" = 1'-0"

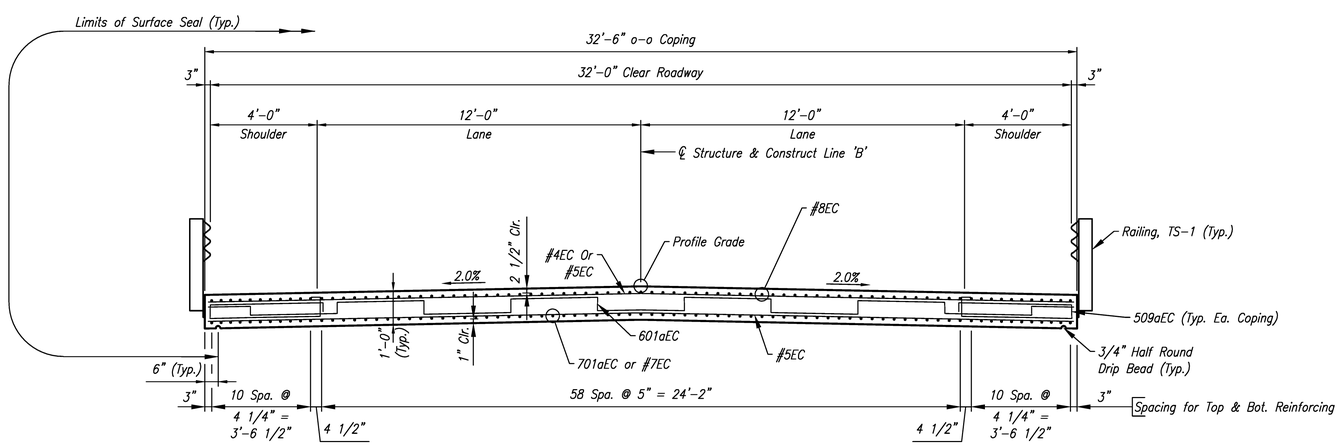

SECTION ⊥ TO STRUCTURE

Scale: 3/8" = 1'-0"

DESIGN DATA

Allowable Design Stresses:
Reinforcing Bars (Grade 60) fy= 60,000 psi
Class 'C' Concrete f'c= 4,000 psi

Live Load:
Designed for HL-93 Loading, in Accordance with the AASHTO LRFD Bridge Design Specifications, 6th Edition, 2012, and its Subsequent Interims.

Dead Load:
Actual Dead Load Plus 35 psf for Future Wearing Surface. The Slab Thickness Consists of a 11 1/2" Structural Depth and a 1/2" Wearing Surface (1'-0" Total Thickness).

NOTES:

1. For General Notes See Sheet 10.
2. For Additional Details and Bill of Materials, See Sheets 12 Thru 13 & 16.
3. For Reinforcing Bar Notes, See Standard Drawing No. E 703-BRST-01.
4. For Details of Railing see Standard Drawing Nos. E 706-B-140d in Special Provisions.
5. For Type 'A' Construction Joint, See Standard Drawing No. E 702-CJTA-01.

KEYNOTES:

1. 4-#5EC x 34'-3" (Top), 3 Eq. Spa. = 1'-7 1/2"
2. 4-#5EC x 34'-3" (Top), 3 Eq. Spa. = 2'-2"
3. 18-#4EC x 34'-3" (Top), 18-#5EC x 34'-3" (Bot.) 18-509aEC (Ea. Coping)(36-509aEC Total), 17 Eq. Spa. = 16'-10"
4. 24-#4EC x 34'-3" (Top), 24-#5EC x 34'-3" (Bot.) 24-509aEC (Ea. Coping)(48-509aEC Total), 23 Eq. Spa. = 22'-10"

DLZ

MICHAEL A. KUMMETH REGISTERED No. 910382 STATE OF INDIANA PROFESSIONAL ENGINEER
DLZ INDIANA, LLC

RECOMMENDED FOR APPROVAL Michael A Kummeth 7/25/2016
DESIGN ENGINEER DATE

DESIGNED: JFM DRAWN: Jlm
CHECKED: DOR CHECKED: JFM

HAMILTON COUNTY HIGHWAY DEPARTMENT

BRIDGE 304 FLOOR DETAILS

HORIZONTAL SCALE	BRIDGE FILE
AS NOTED	HAMILTON 304
VERTICAL SCALE	DESIGNATION
AS NOTED	
SURVEY BOOK	SHEETS
ELECTRONIC	15 of 28
CONTRACT	PROJECT
–	HCHD PB-13-0004

Date: Apr 21, 2016, 1:13pm User ID: thill
File: M:\PROJ\13513\0915 - Hamilton SS 32028 & 32059\bridge\dwg\0915SP01.dwg Model Tab: Plan Set

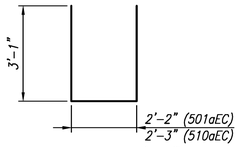

501aEC x 8'-4"
510aEC x 8'-5"

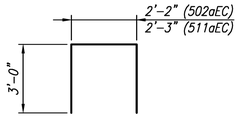

502aEC x 8'-2"
511aEC x 8'-3"

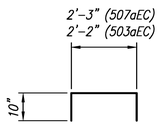

503aEC x 3'-10"
507aEC x 3'-11"

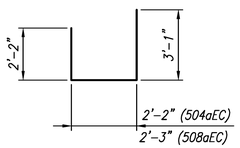

504aEC x 7'-5"
508aEC x 7'-6"

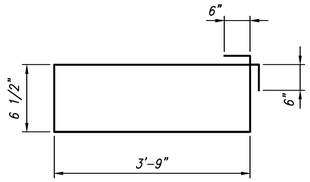

509aEC x 9'-7"

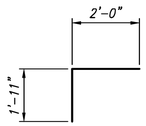

506aEC x 3'-11"

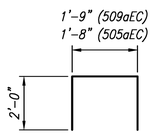

505aEC x 5'-8"
509aEC x 5'-9"

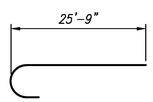

701aEC x 26'-7"

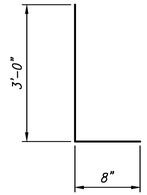

402aEC x 3'-8"

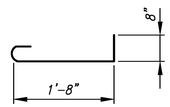

403aEC x 2'-10"

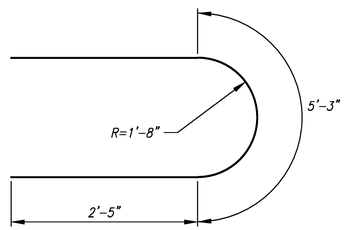

404aEC x 10'-1"

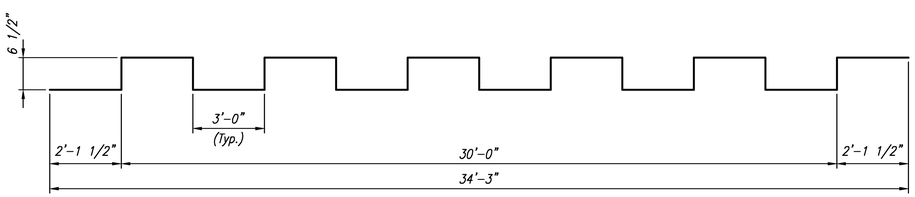

601aEC x 40'-3"

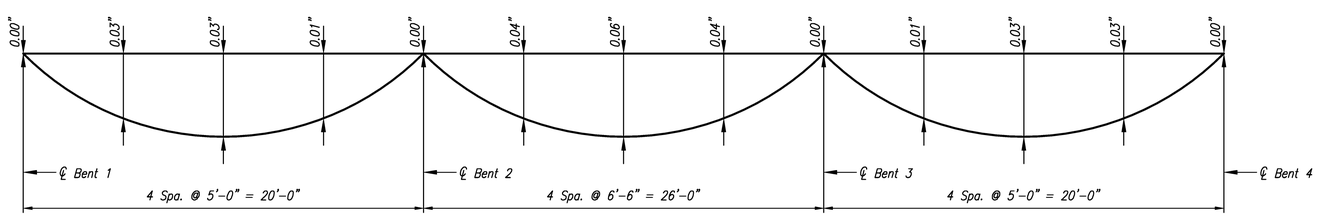

SPAN A SPAN B SPAN C

CONCRETE DEAD LOAD DEFLECTIONS
Scale: None

BILL OF MATERIALS
BENT 1
EPOXY COATED REINF. BARS

MARK / SIZE	NO. REQ'D	LENGTH	WEIGHT (Lbs)
503aEC	34	3'- 10"	
504aEC	34	7'- 5"	
505aEC	34	5'- 8"	
506aEC	36	3'- 11"	
507aEC	2	3'- 11"	
508aEC	2	7'- 6"	
509aEC	2	5'- 9"	
#5EC	9	34'- 3"	
Total #5EC Bars			1104
Total Reinforcing Bars, Epoxy Coated			1104

MISCELLANEOUS

5 - Pile, Steel H, HP 12x53 (Est. 48 LFT Each)	240 LFT

BILL OF MATERIALS
BENT 2
EPOXY COATED REINF. BARS

MARK / SIZE	NO. REQ'D	LENGTH	WEIGHT (Lbs)
501aEC	36	8'- 4"	
502aEC	36	8'- 2"	
503aEC	36	3'- 10"	
507aEC	2	3'- 11"	
510aEC	2	8'- 5"	
511aEC	2	8'- 3"	
#5EC	8	34'- 3"	
Total #5EC Bars			1092
401aEC	26	10'- 1"	
402aEC	74	3'- 8"	
403aEC	112	2'- 10"	
#4EC	4	34'- 3"	
#4EC	26	31'- 6"	
#4EC	92	14'- 6"	
#4EC	36	2'- 6"	
Total #4EC Bars			2158
Total Reinforcing Bars, Epoxy Coated			3250

CLASS 'A' CONCRETE

Location	CYS
Pour 2	30.3
Total Concrete, A, Substructure	30.3

CLASS 'B' CONCRETE

Location	CYS
Pour 1	3.8
Total Concrete, B, Footing	3.8

MISCELLANEOUS

9 - Pile, Steel H, HP 12x53 (Est. 52 LFT Each)	468 LFT

BILL OF MATERIALS
BENT 3
EPOXY COATED REINF. BARS

MARK / SIZE	NO. REQ'D	LENGTH	WEIGHT (Lbs)
501aEC	36	8'- 4"	
502aEC	36	8'- 2"	
503aEC	36	3'- 10"	
507aEC	2	3'- 11"	
510aEC	2	8'- 5"	
511aEC	2	8'- 3"	
#5EC	8	34'- 3"	
Total #5EC Bars			1092
401aEC	26	10'- 1"	
402aEC	74	3'- 8"	
403aEC	112	2'- 10"	
#4EC	4	34'- 3"	
#4EC	26	31'- 6"	
#4EC	92	14'- 6"	
#4EC	36	2'- 6"	
Total #4EC Bars			2158
Total Reinforcing Bars, Epoxy Coated			3250

CLASS 'A' CONCRETE

Location	CYS
Pour 2	30.1
Total Concrete, A, Substructure	30.1

CLASS 'B' CONCRETE

Location	CYS
Pour 1	3.8
Total Concrete, B, Footing	3.8

MISCELLANEOUS

9 - Pile, Steel H, HP 12x53 (Est. 53 LFT Each)	477 LFT

BILL OF MATERIALS
BENT 4
EPOXY COATED REINF. BARS

MARK / SIZE	NO. REQ'D	LENGTH	WEIGHT (Lbs)
503aEC	34	3'- 10"	
504aEC	34	7'- 5"	
505aEC	34	5'- 8"	
506aEC	36	3'- 11"	
507aEC	2	3'- 11"	
508aEC	2	7'- 6"	
509aEC	2	5'- 9"	
#5EC	9	34'- 3"	
Total #5EC Bars			1104
Total Reinforcing Bars, Epoxy Coated			1104

MISCELLANEOUS

5 - Pile, Steel H, HP 12x53 (Est. 48 LFT Each)	240 LFT

BILL OF MATERIALS
SUPERSTRUCTURE
EPOXY COATED REINF. BARS

MARK / SIZE	NO. REQ'D	LENGTH	WEIGHT (Lbs)
#8EC	162	37'- 6"	
Total #8EC Bars			16220
701aEC	162	26'- 7"	
7EC	81	26'- 0"	
Total #7EC Bars			13107
601aEC	24	40'- 3"	
Total #6EC Bars			1451
509aEC	120	9'- 7"	
#5EC	76	34'- 3"	
Total #5EC Bars			3914
#4EC	60	34'- 3"	
Total #4EC Bars			1373
Total Reinforcing Bars, Epoxy Coated			36065

CLASS 'C' CONCRETE

Location	CYS
Pour 3	115.7
Total Concrete, C, Superstructure	115.7

MISCELLANEOUS

Railing, Steel, TS-1	125 LFT
Surface Seal (Est.)	2400 SFT
Threaded Tie Bar Assembly	34 EACH

DLZ

MICHAEL A. KUMMETH REGISTERED No. 910382 STATE OF INDIANA PROFESSIONAL ENGINEER
DLZ INDIANA, LLC

RECOMMENDED FOR APPROVAL Michael A Kummeth 7/25/2016
DESIGN ENGINEER DATE

DESIGNED: JFM DRAWN: Jlm
CHECKED: DOR CHECKED: JFM

HAMILTON COUNTY HIGHWAY DEPARTMENT

BRIDGE 304
FLOOR DETAILS

HORIZONTAL SCALE	BRIDGE FILE
AS NOTED	HAMILTON 304
VERTICAL SCALE	DESIGNATION
AS NOTED	
SURVEY BOOK	SHEETS
ELECTRONIC	16 of 28
CONTRACT	PROJECT
–	HCHD PB-13-0004

Date: Apr 21, 2016, 1:14pm User ID: thill
File: M:\PROJ\1353\09155 - Hamilton SS 32028 & 32059\bridge\dwg\09155P01.dwg Model Tab: Bills

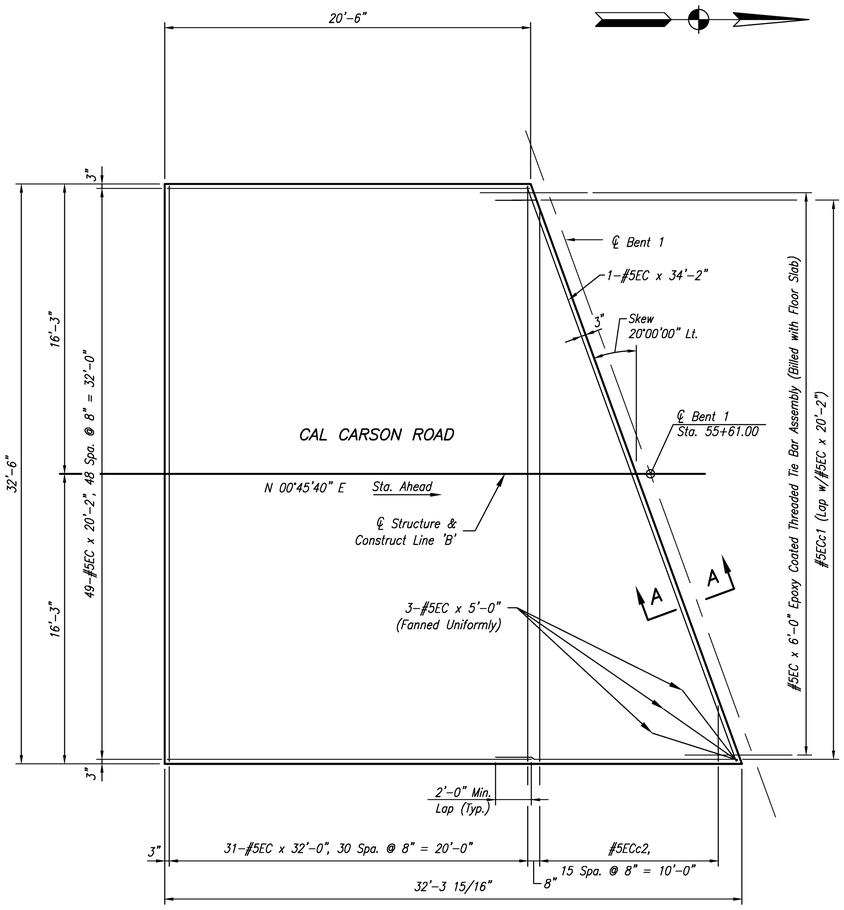

TOP REINFORCING PLAN OF SOUTH APPROACH SLAB

(North Approach Similar)
Scale: 1/4"=1'-0"

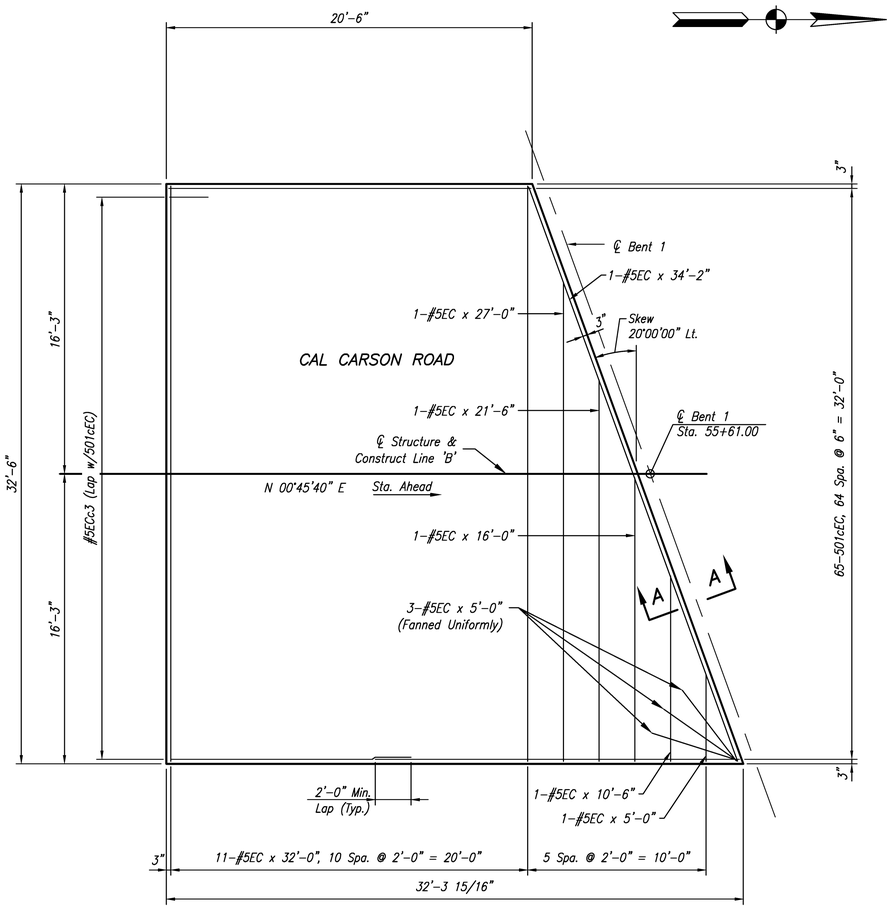

BOTTOM REINFORCING PLAN OF SOUTH APPROACH SLAB

(North Approach Similar)
Scale: 1/4"=1'-0"

BILL OF MATERIALS			
APPROACH SLAB			
EPOXY COATED REINF. BARS			
MARK / SIZE	NO. REQ'D	LENGTH	WEIGHT (Lbs)
501cEC	65	20'- 9"	
5ECc1	24	16'- 1"	
5ECc2	8	33'- 10"	
5ECc3	32	16'- 1"	
#5EC	2	34'- 2"	
#5EC	42	32'- 0"	
#5EC	1	27'- 0"	
#5EC	1	21'- 6"	
#5EC	49	20'- 2"	
#5EC	1	16'- 0"	
#5EC	1	10'- 6"	
#5EC	7	5'- 0"	
Total #5EC Bars			5247
Total Reinforcing Bars, Epoxy Coated			5247
MISCELLANEOUS			
Reinforced Concrete Bridge Approach, 10 In.			96 SYS
Dense Grade Subbase			16 CYS
Surface Seal (Est.)			859 SFT

Note: Quantities Shown in Bill of Materials are for One Approach Slab Only.

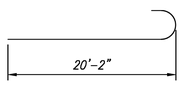

501cEC X 20'-9"

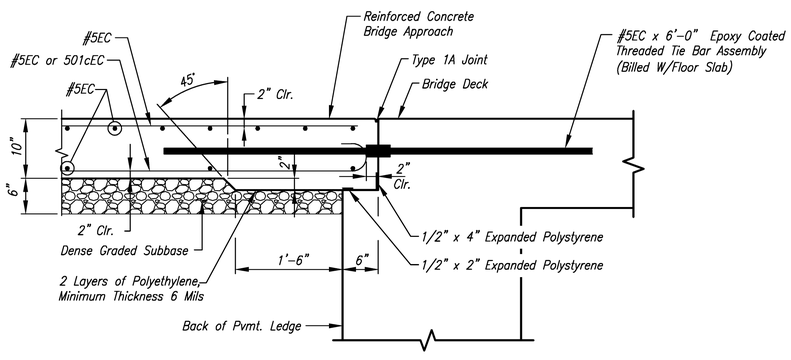

SECTION A-A

Scale: 1" = 1'-0"

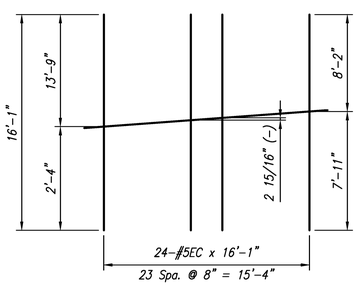

#5ECc1 x 16'-1"

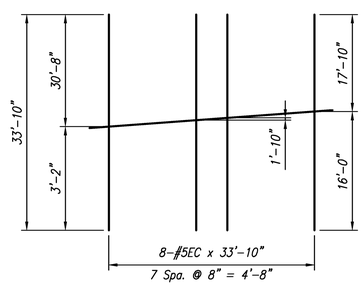

#5ECc2 x 33'-10"

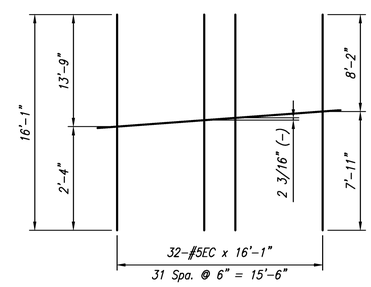

#5ECc3 x 16'-1"

NOTES:

1. For General Notes, See Sheet 10.
2. For Reinforcing Bar Notes, See Standard Drawing E 703-BRST-01.
3. See Standard Drawing No. E 609-BRJT-01 for Details of Type 1A Joint.

DLZ

MICHAEL A. KUMMETH REGISTERED No. 910382 STATE OF INDIANA PROFESSIONAL ENGINEER
DLZ INDIANA, LLC

RECOMMENDED FOR APPROVAL Michael A Kummeth 7/25/2016
DESIGN ENGINEER DATE

DESIGNED: JFM DRAWN: Jlm
CHECKED: DOR CHECKED: JFM

HAMILTON COUNTY
HIGHWAY DEPARTMENT

BRIDGE 304
APPROACH SLAB

HORIZONTAL SCALE	BRIDGE FILE
AS NOTED	HAMILTON 304
VERTICAL SCALE	DESIGNATION
AS NOTED	
SURVEY BOOK	SHEETS
ELECTRONIC	17 of 28
CONTRACT	PROJECT
–	HCHD PB-13-0004

Date: Apr 21, 2016, 1:14pm User ID: thill
File: M:\PROJ\1363\0915 - Hamilton SS 32028 & 32059\bridge\dwg\0915AS01.dwg Model Tab: Plan Set

SUMMARY OF BRIDGE QUANTITIES

ITEM	CONCRETE						RAILING, STEEL, TS-1		REINF. BARS	EPOXY COATED REINF. BARS	FIELD DRILLED HOLE IN CONCRETE	OVERLAY DAM	PILES												POLYMERIC OVERLAY SYSTEM	BRIDGE DECK PATCHING, PARTIAL DEPTH	BRIDGE DECK OVERLAY, ADDITIONAL	CONC. STR. MEMBERS		BARRIER DELIN-EATORS	SURFACE SEAL**	DENSE GRADED SUBBASE	REINFORCED CONCRETE BRIDGE APPROACH 10 IN.	THREADED TIE BAR ASSEMBLY, EPOXY COATED
	CLASS C	CLASS A	CLASS B										CONC. STEEL SHELL ENCASED		REINF. CONC. STEEL SHELL ENCASED EPOXY COAT		STEEL H HP 12X53		TEST PILE INDICATOR, PRODUCTION		STEEL H REINF. CONC. ENCASEDY HP 12x53		TEST PILE INDICATOR RESTRIKE	CORED HOLES IN ROCK					BOX BEAMS TYPE	I BEAM TYPE					
	SUPERSTR	SUBSTR	ABOVE FTG.	IN FTG.																														
	CYS.	CYS.	CYS.	CYS.			CYS.	LFT.	LBS.	LBS.	EACH	SFT	NO.	LFT.	NO.	LFT.	NO.	LFT.	NO.	LFT.	NO.	LFT.	EACH	NO.	LFT.	SYS	SFT	CYS	LFT.	LFT.	EACH	SFT.	CYS	SYS	EACH
BENT 1										1,104							5	240																
BENT 2		30.3		3.8						3,250							9	468																
BENT 3		30.1		3.8						3,250							9	477																
BENT 4										1,104							5	240																
SUPERSTRUCTURE	115.7							125		36,065																					2,400			34
SOUTH APPROACH SLAB										5,247																					859	16	96	
NORTH APPROACH SLAB										5,247																					859	16	96	
TOTALS	115.7	60.4		7.6				125		55,267							28	1,425													4,118	32	192	34

** ESTIMATED QUANTITY

DLZ

MICHAEL A. KUMMETH REGISTERED No. 910382 STATE OF INDIANA PROFESSIONAL ENGINEER

DLZ INDIANA, LLC

RECOMMENDED FOR APPROVAL Michael A Kummeth 7/25/2016
DESIGN ENGINEER DATE

DESIGNED: JFM DRAWN: CJS
CHECKED: DOR CHECKED: JFM

HAMILTON COUNTY HIGHWAY DEPARTMENT

BRIDGE 304
SUMMARY OF BRIDGE QUANTITIES

HORIZONTAL SCALE	BRIDGE FILE
N/A	HAMILTON 304
VERTICAL SCALE	DESIGNATION
N/A	
SURVEY BOOK	SHEETS
ELECTRONIC	18 of 28
CONTRACT	PROJECT
–	HCHD PB-13-0004

Date: Apr 21, 2016, 1:14pm User ID: thill
File: M:\PROJ\1353\09\5 - Hamilton SS 32028 & 32059\bridge\dwg\0915BS01.dwg Model Tab: Plan Set

SUMMARY OF QUANTITIES AND APPROACH TABLE

LOCATION (STATION)	DESCRIPTION (APPROACH TYPE OR CLASS)	WIDTH	LENGTH	DISTANCE BEYOND R/W LINE	RADII 'R'	GRADE (LESS THAN 8.33% NOT SHOWN)		EXCAVATION		HMA FOR APPROACHES, TYPE B (M)	HMA FOR ROADS (K) (LB/SYS)			HMA FOR WIDENING TYPE B	SUBBASE FOR CEMENT CONC PAVEMENT	BITUMINOUS MATERIAL FOR:			COMPACTED AGGREGATE, NO. 53 (J)	HMA FOR SHOULDERS (J1) (LB/SYS)			COMPACTED AGGREGATE, NO. 53 (J2)	MILLING ASPHALT 1 1/2"	6" COMPACTED AGGREGATE NO. 73	SUBGRADE TREATMENT II	REMARKS
											SURFACE	INTER	BASE			SEAL COAT	PRIME COAT	TACK COAT		SURFACE	INTER	BASE					
		'W'	'L'		'R'	1	2	CYS		550/SYD	165	330	660							165	330	660					
		FEET	FEET	FEET	FEET	%	%	CUT	FILL	TONS	TON	TON	TON	TON	SYS	TON	TON	SYS	TON	TON	TON	TON	TON	SYS	TON	SYS	
LINE 'B'																											
51+60–61+85	Mainline										197	334	674	75				4931	510	23	46	91	15	408		3235	
TOTAL THIS SHEET											197	334	674	75				4931	510	23	46	91	15	408		3235	

** ESTIMATED QUANTITY

GUARDRAIL SUMMARY TABLE

LOCATION				W-BEAM GUARDRAIL LENGTH		TGS-1 GUARDRAIL	TYPE OS END TERMINAL	CURVED TERMINAL END	CURVED W-BEAM GUARDRAIL SYSTEM			
FROM STATION	TO STATION	LEFT	RIGHT	STANDARD POST AT 6.25 FEET SPA.	TIMBER GUARDRAIL				TERMINAL END		CONNECTOR SYSTEM	
				FEET	FEET	FEET	EACH	EACH	TYPE	EACH	TYPE	EACH
LINE 'B'												
54+24.91	53+74.91		X				1					
53+74.91	55+49.91		X	175								
55+49.91	53+68.66		X			1						
54+44.34	54+94.34	X					1					
54+94.34	55+38.09	X		43.75								
55+38.09	55+56.84	X				1						
56+19.34	56+38.09	X				1						
56+38.09	58+06.84	X		168.75								
58+06.84	58+56.84	X					1					
56+31.16	56+49.91		X									
56+49.91	57+12.41		X	62.75		1						
57+12.41	57+62.41		X				1					
TOTALS				450.25		4	4					

EARTHWORK BALANCE

ITEM	VOLUME (CYS)
FILL (+25%)	1515
BORROW (BENT 2 AND 3)	70
COMMON EXCAVATION–LINE 'B'	605
WASTE FROM HCHD PROJECT # PB13–0003	0
NET BORROW	980
BENCHING (NO DIRECT PAYMENT)	0
COMMON EXCAVATION FOR UNDERCUTTING (UNDISTRIBUTED)	100
EXCAVATION FOUNDATION UNCLASSIFIED	15
STRUCTURAL BACKFILL TYPE 4	20
EXCAVATION WATERWAY (BRIDGE 304)	410
EXCAVATION WET	120

R/W MARKERS

LOCATION				OFFSET (FT)	EACH
LINE	STATION	LEFT	RIGHT		
LINE "B"	61+90	X		40'	1
	61+90		X	40'	1
				TOTAL	2

DLZ

FAISAL SALEEM REGISTERED No. 10707439 STATE OF IND IANA PROFESSIONAL ENGINEER

DLZ INDIANA, LLC

RECOMMENDED FOR APPROVAL — DESIGN ENGINEER — DATE 07-26-16

DESIGNED: CAP DRAWN: CJS

CHECKED: FS CHECKED: FS

HAMILTON COUNTY HIGHWAY DEPARTMENT

BRIDGE 304
MISCELLANEOUS TABLES

HORIZONTAL SCALE	BRIDGE FILE
N/A	HAMILTON 304
VERTICAL SCALE	DESIGNATION
SURVEY BOOK	SHEETS
ELECTRONIC	19 of 28
CONTRACT	PROJECT
–	HCHD PB–13–0004

Date: Jul 27, 2016, 11:40am User ID: hill
File: M:\PROJ\1383\0915 – hamilton as 32028 & 32059\Civil\DWG\0915DT10.dwg Model Tab: Plan Set

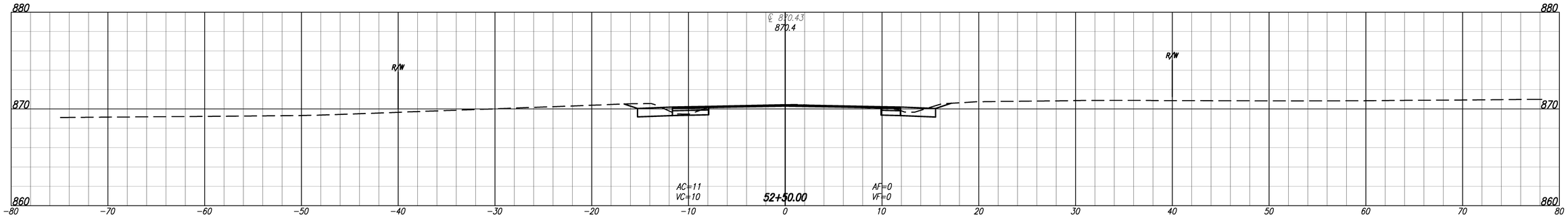

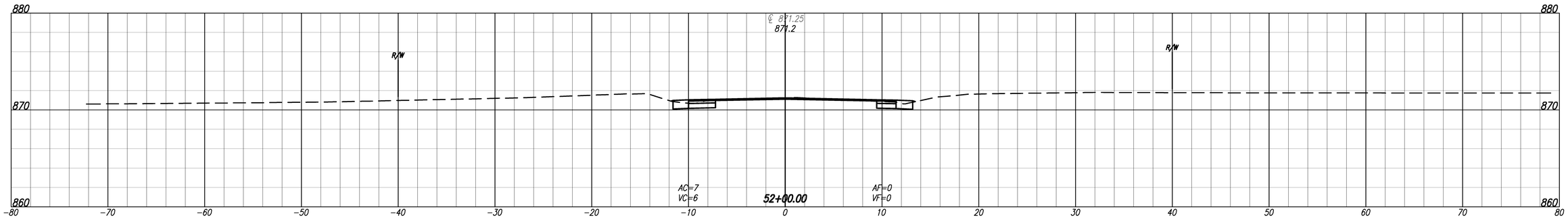

BEGIN INCIDENTAL CONSTRUCTION
STA. 51+60.00 LINE 'B'

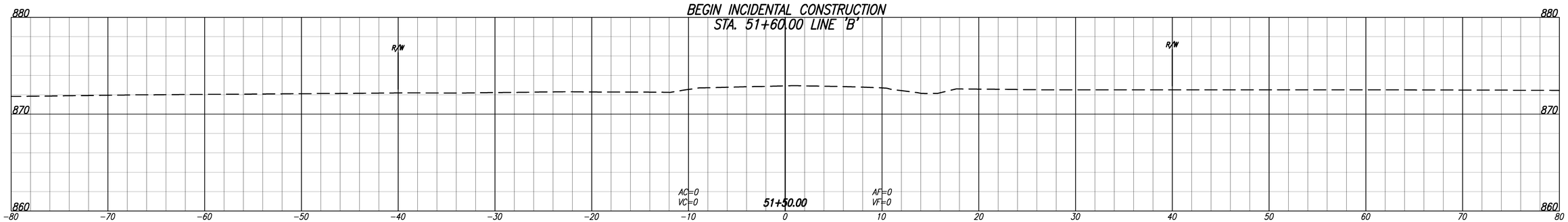

DLZ

DLZ INDIANA, LLC

RECOMMENDED FOR APPROVAL _____
DESIGN ENGINEER DATE

DESIGNED: CAP DRAWN: CJS
CHECKED: FS CHECKED: FS

HAMILTON COUNTY HIGHWAY DEPARTMENT

CROSS SECTIONS LINE 'B'

HORIZONTAL SCALE	BRIDGE FILE
1" = 5'	HAMILTON 304
VERTICAL SCALE	DESIGNATION
1" = 5'	

SURVEY BOOK	SHEETS
ELECTRONIC	20 of 28
CONTRACT	PROJECT
–	HCHD PB-13-0004

Date: Apr 21, 2016, 1:15pm User ID: thill
File: M:\PROJ\1383\0915 - Hamilton SS 32028 & 32059\Civil\DWG\0915cs-xs "B".dwg Model Tab: XS LINE "B" (1)

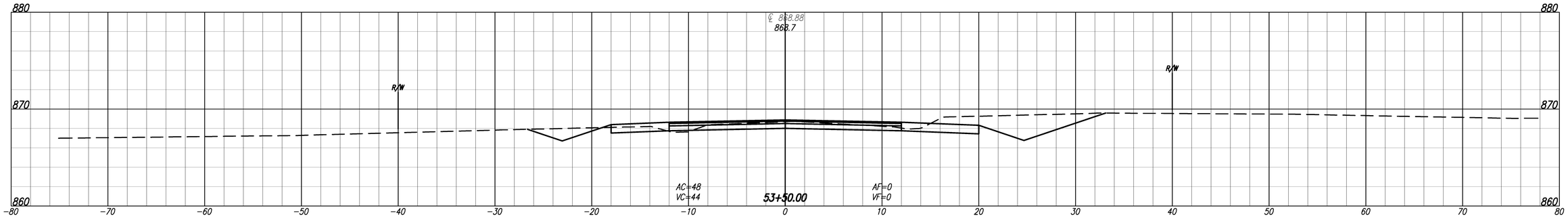

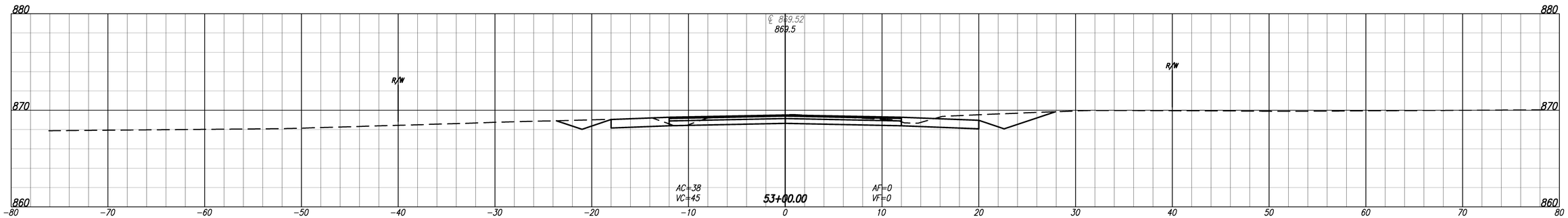

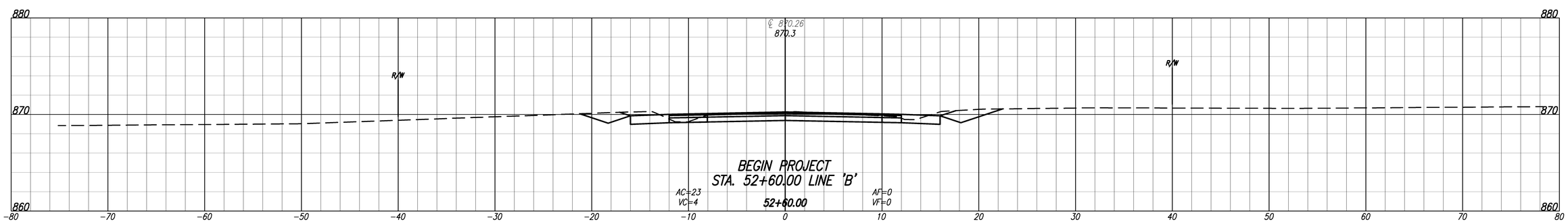

DLZ

DLZ INDIANA, LLC

RECOMMENDED FOR APPROVAL _____
DESIGN ENGINEER DATE

DESIGNED: CAP DRAWN: CJS
CHECKED: FS CHECKED: FS

HAMILTON COUNTY HIGHWAY DEPARTMENT

CROSS SECTIONS LINE 'B'

HORIZONTAL SCALE	BRIDGE FILE
1" = 5'	HAMILTON 304
VERTICAL SCALE	DESIGNATION
1" = 5'	
SURVEY BOOK	SHEETS
ELECTRONIC	21 of 28
CONTRACT	PROJECT
–	HCHD PB-13-0004

Date: Apr 21, 2016, 1:15pm User ID: thill
File: M:\PROJ\1363\0915 - Hamilton SR 32/028 & 32059\Civil\DWG\0915cscss "B".dwg Model Tab: XS LINE "B" (2)

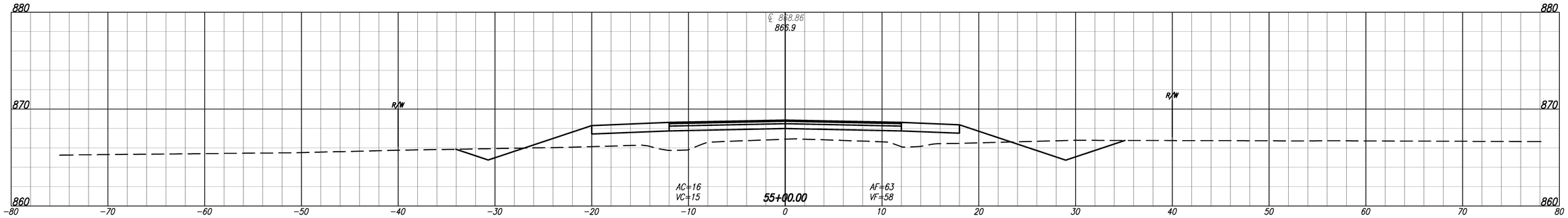

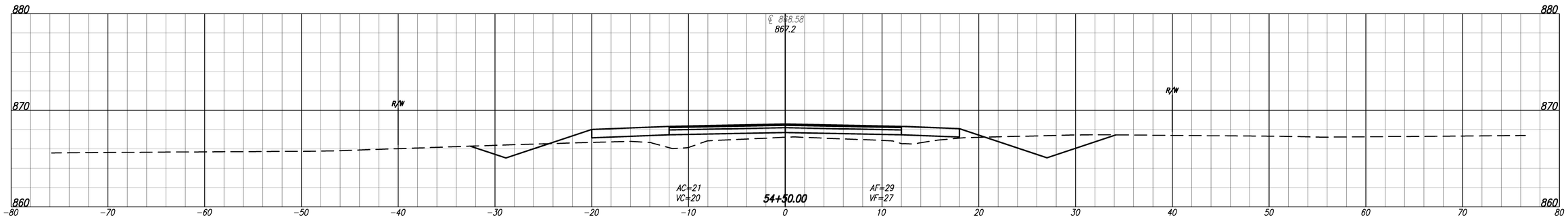

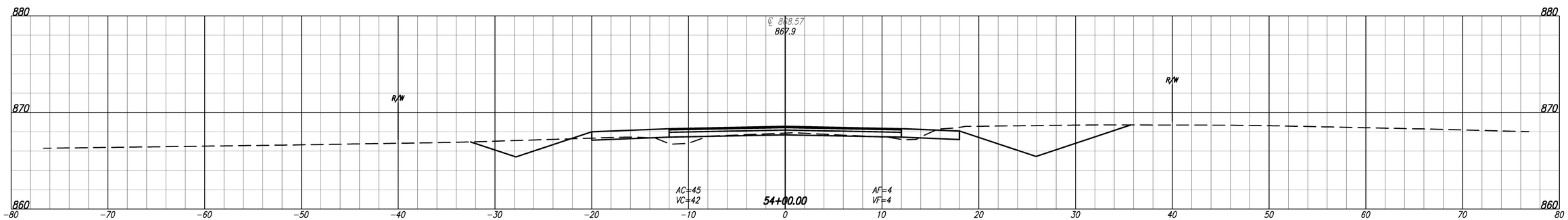

DLZ

DLZ INDIANA, LLC

RECOMMENDED FOR APPROVAL _____
DESIGN ENGINEER DATE

DESIGNED: CAP DRAWN: CJS
CHECKED: FS CHECKED: FS

HAMILTON COUNTY HIGHWAY DEPARTMENT

CROSS SECTIONS LINE 'B'

HORIZONTAL SCALE	BRIDGE FILE
1" = 5'	HAMILTON 304
VERTICAL SCALE	DESIGNATION
1" = 5'	
SURVEY BOOK	SHEETS
ELECTRONIC	22 of 28
CONTRACT	PROJECT
–	HCHD PB-13-0004

Date: Apr 21, 2016, 1:16pm User ID: thill
File: M:\PROJ\1363\0915 - Hamilton SS 32028 & 32059\Civil\DWG\0915csxs 'B'.dwg Model Tab: XS LINE 'B' (3)

END STRUCTURE STA. 56+28.33 LINE 'B'
BEGIN STRUCTURE STA. 55+59.67 LINE 'B'

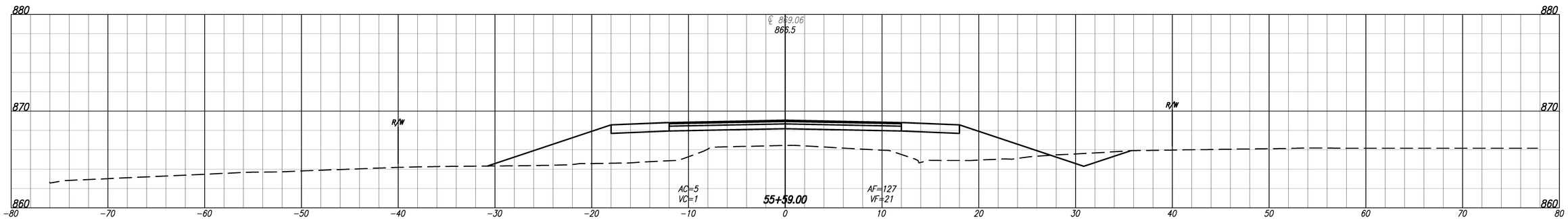

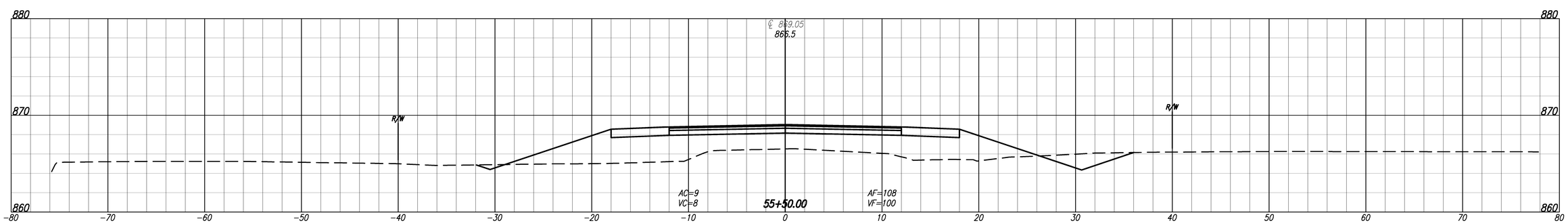

DLZ

DLZ INDIANA, LLC

RECOMMENDED FOR APPROVAL _____
DESIGN ENGINEER DATE

DESIGNED: CAP DRAWN: CJS
CHECKED: FS CHECKED: FS

HAMILTON COUNTY HIGHWAY DEPARTMENT

CROSS SECTIONS LINE 'B'

HORIZONTAL SCALE	BRIDGE FILE
1" = 5'	HAMILTON 304
VERTICAL SCALE	DESIGNATION
1" = 5'	

SURVEY BOOK	SHEETS
ELECTRONIC	23 of 28
CONTRACT	PROJECT
–	HCHD PB-13-0004

Date: Apr 21, 2016, 1:16pm User ID: thill
File: M:\PROJ\1363\0915 - Hamilton SS 32028 & 32059\Civil\DWG\0915csxs 'B'.dwg Model Tab: XS LINE 'B' (4)

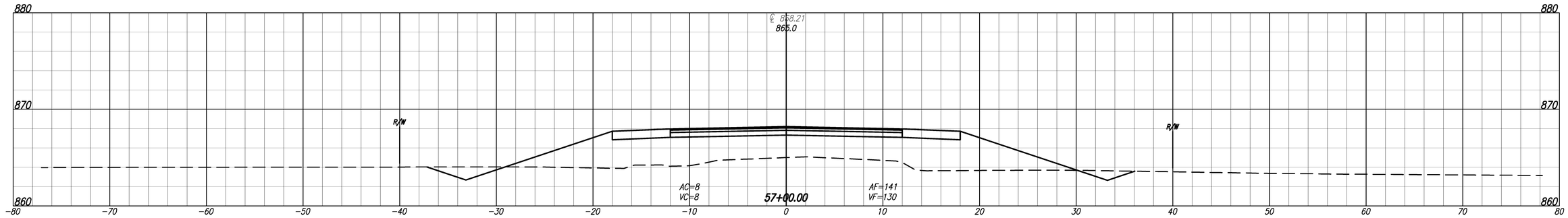

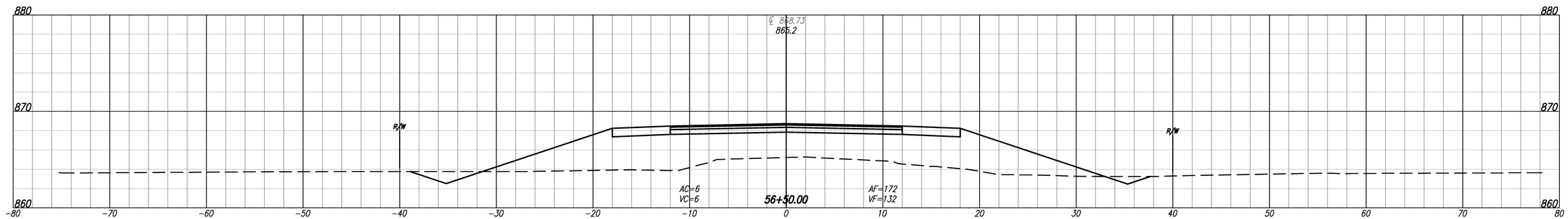

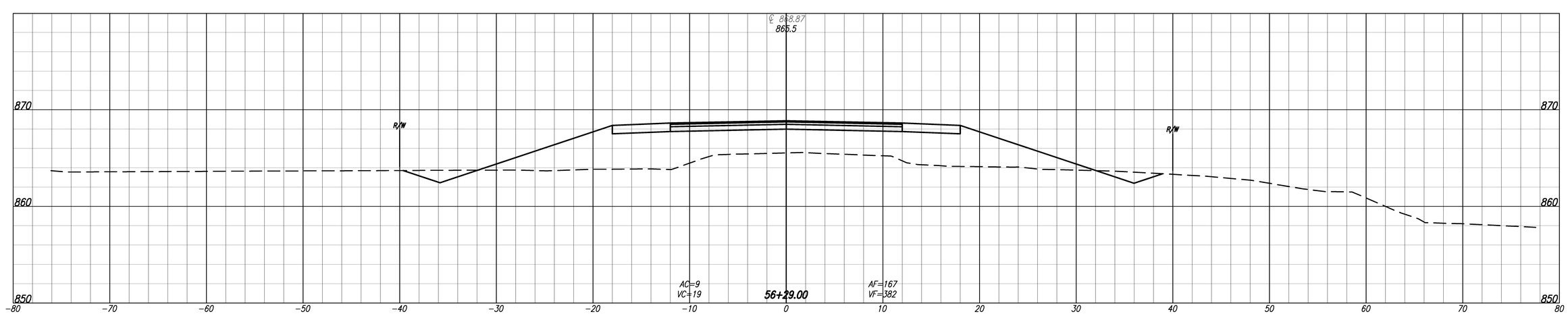

DLZ

DLZ INDIANA, LLC

RECOMMENDED FOR APPROVAL _____
DESIGN ENGINEER DATE

DESIGNED: CAP DRAWN: CJS
CHECKED: FS CHECKED: FS

HAMILTON COUNTY HIGHWAY DEPARTMENT

CROSS SECTIONS LINE 'B'

HORIZONTAL SCALE	BRIDGE FILE
1" = 5'	HAMILTON 304
VERTICAL SCALE	DESIGNATION
1" = 5'	
SURVEY BOOK	SHEETS
ELECTRONIC	24 of 28
CONTRACT	PROJECT
–	HCHD PB-13-0004

Date: Apr 21, 2016, 1:16pm User ID: thill
File: M:\PROJ\1353\0915 - Hamilton S3 32028 & 32059\Civil\DWG\0915cscss 'B'.dwg Model Tab: XS LINE 'B' (5)

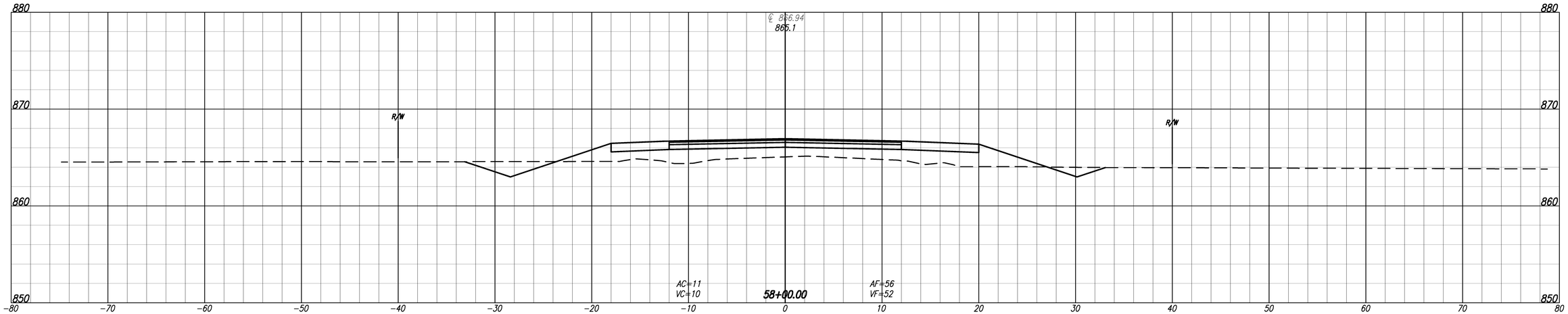

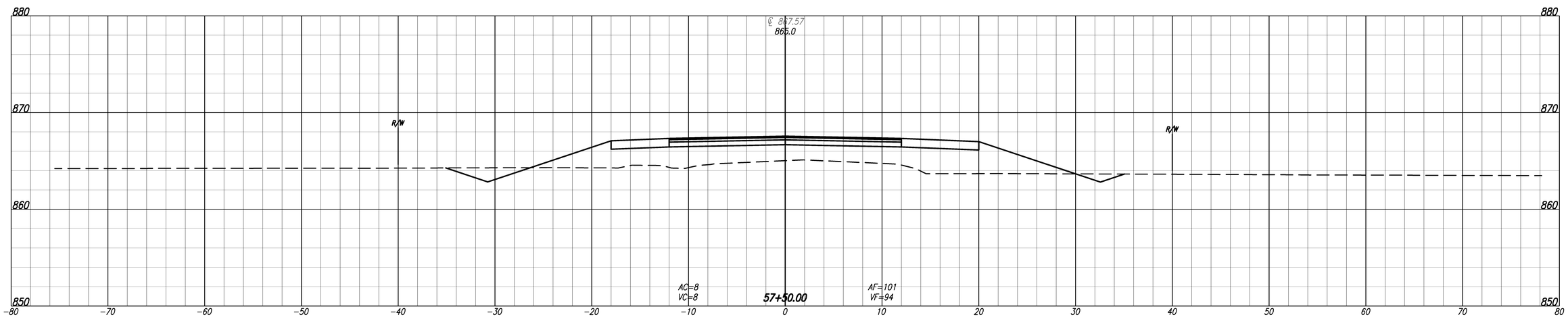

DLZ

DLZ INDIANA, LLC

RECOMMENDED FOR APPROVAL _____
DESIGN ENGINEER DATE

DESIGNED: CAP
DRAWN: CJS
CHECKED: FS
CHECKED: FS

HAMILTON COUNTY HIGHWAY DEPARTMENT

CROSS SECTIONS LINE 'B'

HORIZONTAL SCALE	BRIDGE FILE
1" = 5'	HAMILTON 304
VERTICAL SCALE	DESIGNATION
1" = 5'	
SURVEY BOOK	SHEETS
ELECTRONIC	25 of 28
CONTRACT	PROJECT
–	HCHD PB-13-0004

Date: Apr 21, 2016, 1:16pm User ID: thill
File: M:\PROJ\1353\0915 - Hamilton S3 32028 & 32059\Civil\DWG\0915csxs 'B'.dwg Model Tab: XS LINE 'B' (6)

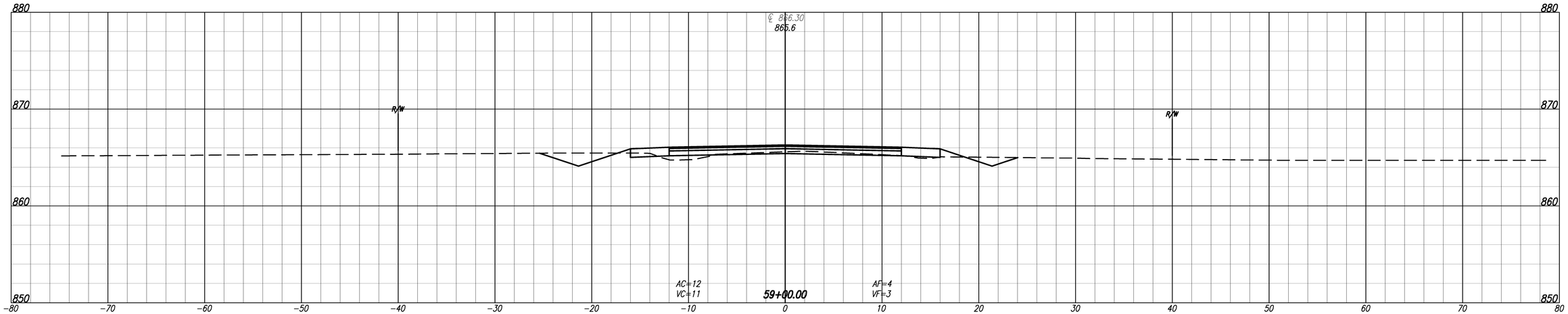

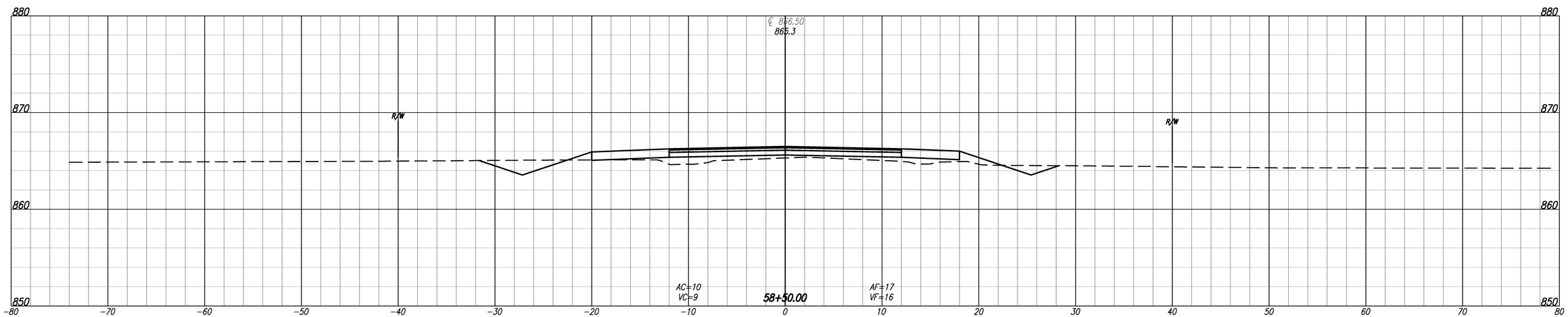

DLZ

DLZ INDIANA, LLC

RECOMMENDED FOR APPROVAL _____
DESIGN ENGINEER DATE

DESIGNED: CAP
DRAWN: CJS
CHECKED: FS
CHECKED: FS

HAMILTON COUNTY HIGHWAY DEPARTMENT

CROSS SECTIONS LINE 'B'

HORIZONTAL SCALE	BRIDGE FILE
1" = 5'	HAMILTON 304
VERTICAL SCALE	DESIGNATION
1" = 5'	
SURVEY BOOK	SHEETS
ELECTRONIC	26 of 28
CONTRACT	PROJECT
–	HCHD PB-13-0004

Date: Apr 21, 2016, 1:16pm User ID: thill
File: M:\PROJ\1353\0915 - Hamilton S3 32028 & 32059\Civil\DWG\0915cscss 'B'.dwg Model Tab: XS LINE 'B' (7)

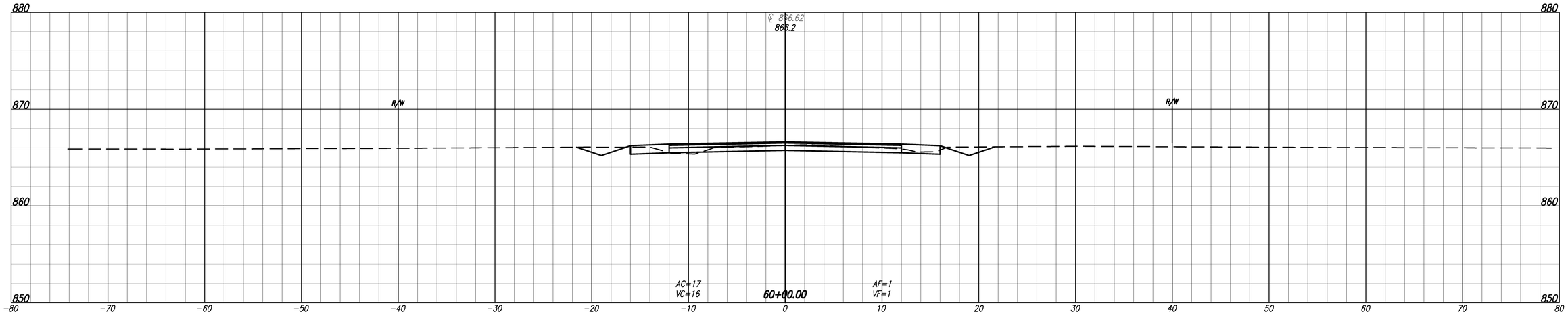

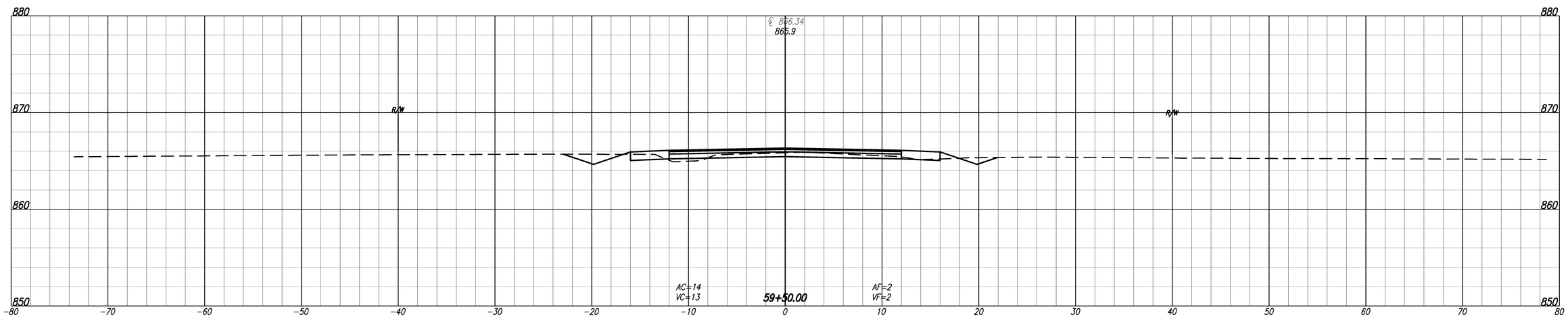

DLZ

DLZ INDIANA, LLC

RECOMMENDED FOR APPROVAL _____
DESIGN ENGINEER DATE

DESIGNED: CAP
DRAWN: CJS
CHECKED: FS
CHECKED: FS

HAMILTON COUNTY HIGHWAY DEPARTMENT

CROSS SECTIONS LINE 'B'

HORIZONTAL SCALE	BRIDGE FILE
1" = 5'	HAMILTON 304
VERTICAL SCALE	DESIGNATION
1" = 5'	

SURVEY BOOK	SHEETS
ELECTRONIC	27 of 28
CONTRACT	PROJECT
–	HCHD PB-13-0004

Date: Apr 21, 2016, 1:16pm User ID: thill
File: M:\PROJ\1353\0915 - Hamilton S3 32028 & 32059\Civil\DWG\0915cscss 'B'.dwg Model Tab: XS LINE 'B' (8)

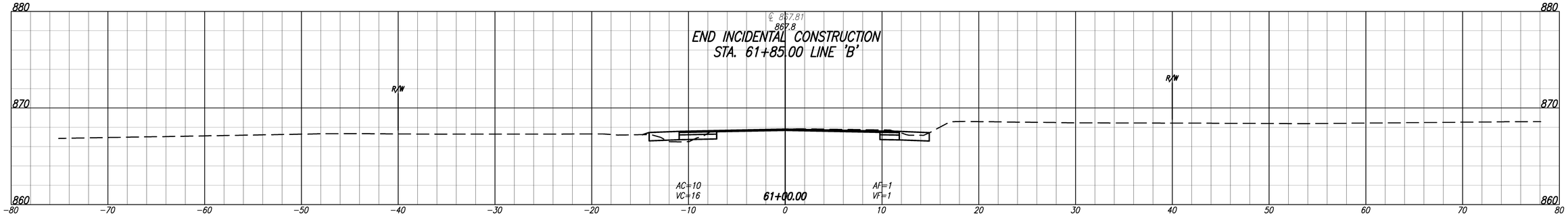

END INCIDENTAL CONSTRUCTION
STA. 61+85.00 LINE 'B'

END PROJECT
STA. 60+75.00 LINE 'B'

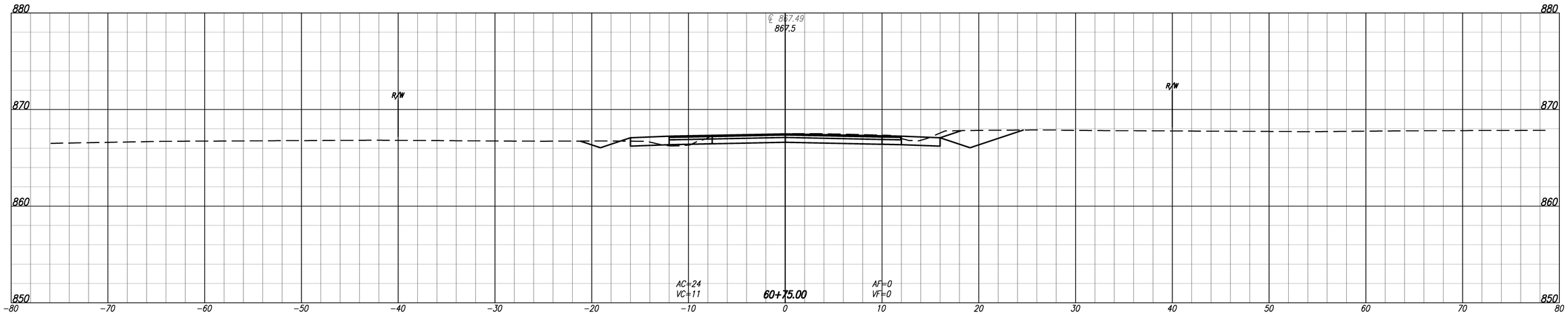

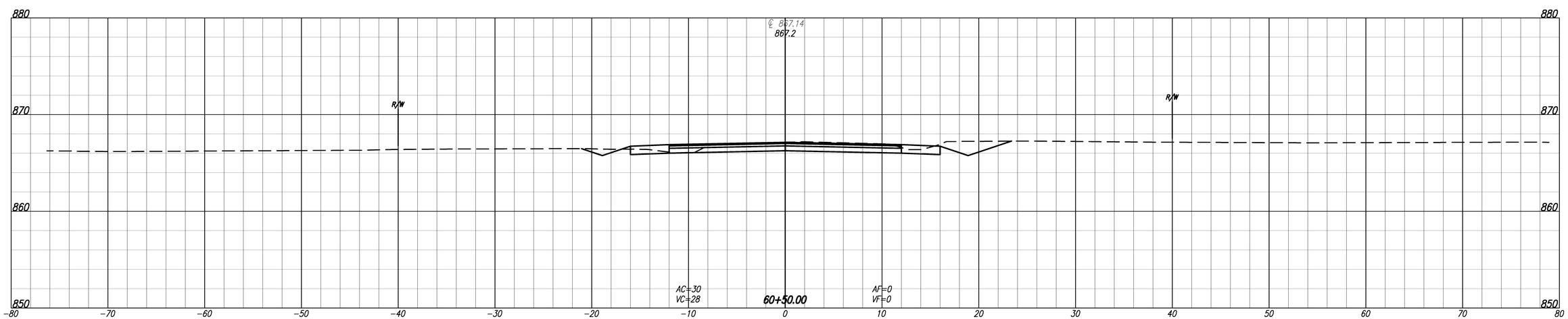

Date: Apr 21, 2016, 1:17pm User ID: thill
File: M:\PROJ\1363\0915 - Hamilton SS 32028 & 32059\Civil\DWG\0915csxs 'B'.dwg Model Tab: XS LINE 'B' (9)

DLZ

DLZ INDIANA, LLC

RECOMMENDED FOR APPROVAL _____
DESIGN ENGINEER DATE

DESIGNED: CAP DRAWN: CJS
CHECKED: FS CHECKED: FS

HAMILTON COUNTY
HIGHWAY DEPARTMENT

CROSS SECTIONS
LINE 'B'

HORIZONTAL SCALE	BRIDGE FILE
1" = 5'	HAMILTON 304
VERTICAL SCALE	DESIGNATION
1" = 5'	
SURVEY BOOK	SHEETS
ELECTRONIC	28 of 28
CONTRACT	PROJECT
–	HCHD PB-13-0004